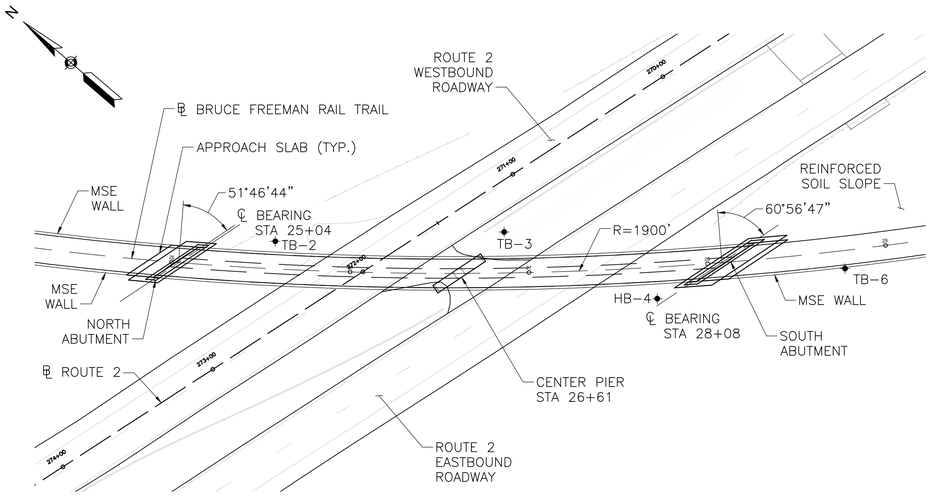

KEY PLAN
SCALE: 1" = 40'

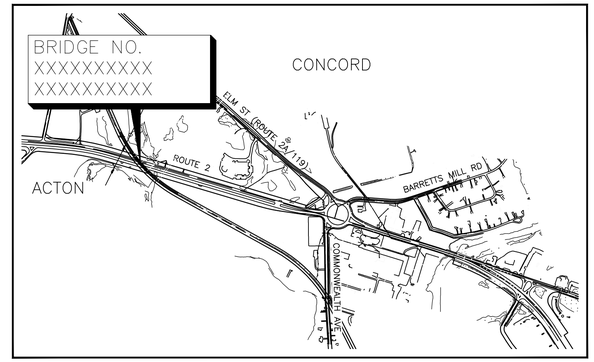

LOCUS
SCALE: 1" = 1000'

GENERAL NOTES		
PROJECT FILE NO.: XXXXXX		
PROJECT DESCRIPTION: PROPOSED BRIDGE		
BRIDGE DESIGN LOADING: H10		
SURVEY: XXX		
ELEVATION REFERENCE: NAVD OF 1988		
TRAFFIC DATA		
	ROADWAY OVER	ROADWAY UNDER
DESIGN YEAR		
AVERAGE DAILY TRAFFIC – PRESENT		
AVERAGE DAILY TRAFFIC – DESIGN YEAR		
DESIGN HOURLY VOLUME		
DIRECTIONAL DISTRIBUTION		
TRUCK PERCENTAGE – AVERAGE DAY		
TRUCK PERCENTAGE – PEAK HOUR		
DESIGN SPEED		
DIRECTIONAL DESIGN HOURLY VOLUME		

DESIGN:

IN ACCORDANCE WITH THE 2009 AASHTO LRFD GUIDE SPECIFICATIONS FOR THE DESIGN OF PEDESTRIAN BRIDGES WITH INTERIM SPECIFICATIONS THROUGH 2015 FOR H10 LOADING.

NOTES:

1. APPROVAL DOES NOT INCLUDE STRUCTURAL ANALYSIS.
2. DIMENSIONS OF STRUCTURAL MEMBERS ARE APPROXIMATE, AND WILL BE FINALIZED DURING THE FINAL DESIGN PHASE.
3. SEE GEOTECHNICAL REPORT, DATED XX XX, XXXX.
4. SEISMIC DESIGN CRITERIA:

   DESIGN RETURN PERIOD:
   DESIGN SPECTRA:

   AS =
   SDS =
   SD1 =

   SITE CLASS =

   SEISMIC DESIGN CATEGORY (SDC) =
5. NORTH AMERICAN VERTICAL DATUM (NAVD) OF 1988 IS USED THROUGHOUT.

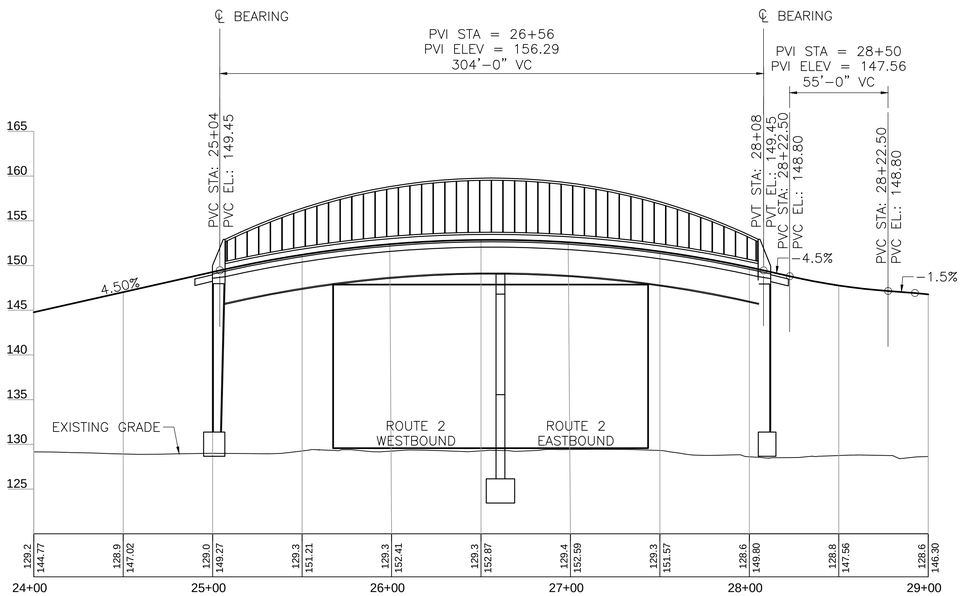

PROFILE
SCALE: HORIZ. 1" = 40'
VERT. 1" = 8'

STANTEC INC.
15 BROAD STREET, SUITE 301
BOSTON, MA 02109

massDOT
Massachusetts Department of Transportation
Highway Division

SKETCH PLANS OF
PROPOSED BRIDGE

CONCORD

BRUCE FREEMAN RAIL TRAIL
OVER ROUTE 2

MASSACHUSETTS DEPARTMENT OF TRANSPORTATION
HIGHWAY DIVISION

APPROVED BY	DATE
STRUCTURAL ELEMENTS:	
TITLE:	
HIGHWAY ELEMENTS:	
TITLE:	

XXXXXX_BR1(BXXXXX)_LOCUS, KEY PLAN, AND PROFILE.DWG Plotted on 3-Feb-2016 12:48 PM
Bruce Freeman Rail Trail Over Route 2 Sketch Plans Submittal (SP1) 04-February-2016

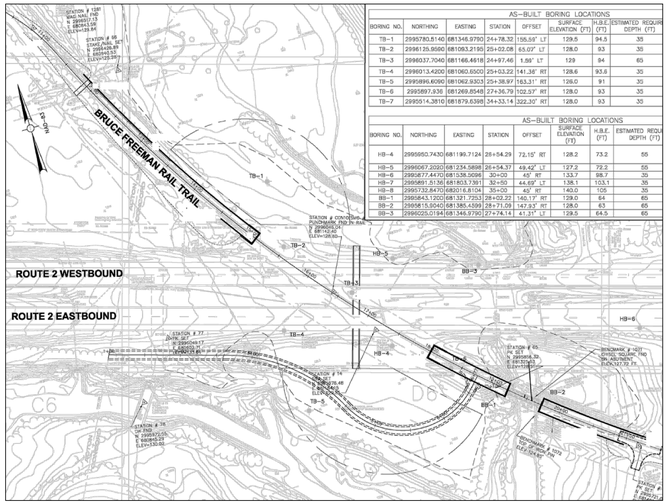

AS-BUILT BORING LOCATIONS							
BORING NO.	NORTHING	EASTING	STATION	OFFSET	SURFACE ELEVATION (FT)	H.B.E. (FT)	ESTIMATED REQUIR DEPTH (FT)
TB-1	2995780.5140	681346.9790	24+78.32	155.59° LT	129.5	94.5	35
TB-2	2996125.9590	681093.2195	25+02.08	65.07° LT	128.0	93	35
TB-3	2996037.7040	681166.4618	24+97.46	1.59° LT	129	94	65
TB-4	2996013.4200	681060.6500	25+03.22	141.38° RT	128.6	93.6	35
TB-5	2995896.6060	681062.6303	25+38.97	163.31° RT	128.0	91	35
TB-6	2995897.936	681269.8548	27+36.79	102.57° RT	128.0	93	35
TB-7	2995514.3810	681879.6398	34+33.14	322.30° RT	128.0	93	35

AS-BUILT BORING LOCATIONS							
BORING NO.	NORTHING	EASTING	STATION	OFFSET	SURFACE ELEVATION (FT)	H.B.E. (FT)	ESTIMATED REQU DEPTH (FT)
HB-4	2995950.7430	681190.7124	26+54.29	72.15° RT	128.2	73.2	55
HB-5	2996067.2020	681234.5898	26+54.37	49.42° LT	127.2	72.2	55
HB-6	2996077.4470	681138.5096	30+00	45° RT	133.7	98.7	35
HB-7	2995891.8135	681803.7361	32+50	44.69° LT	138.1	103.1	35
HB-8	2995732.8470	682016.8104	35+00	45° RT	140.0	105	35
BB-1	2995843.1200	681321.7253	28+02.22	140.17° RT	129.0	64	65
BB-2	2995815.9040	681385.4599	28+71.09	147.93° RT	128.0	63	65
BB-3	2996025.0194	681346.9790	27+74.14	41.31° LT	129.5	64.5	65

2009 BORING LOCATION PLAN

SCALE: 1" = 100'

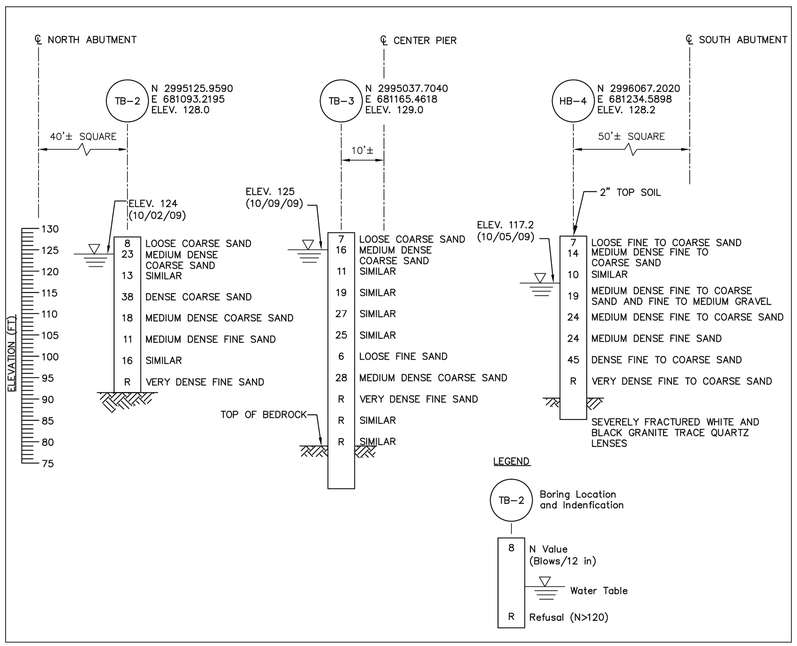

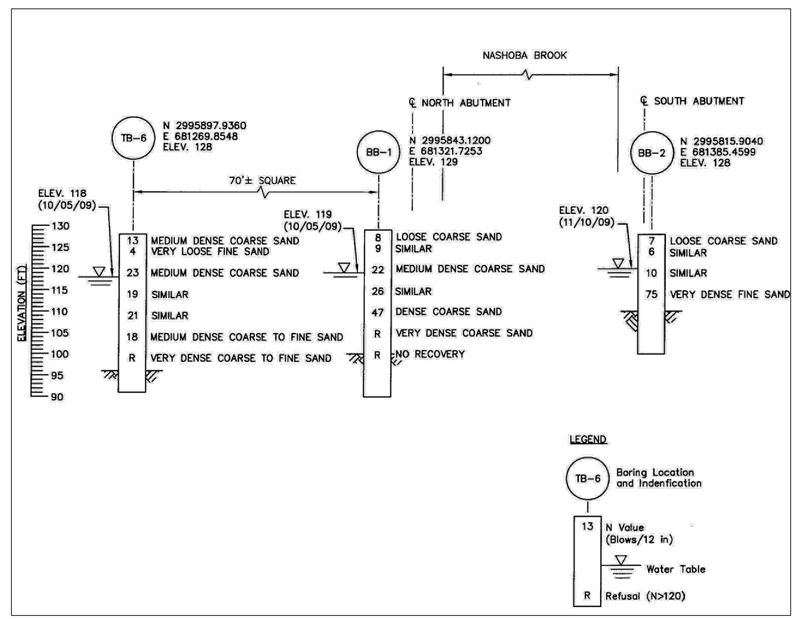

2009 SOIL PROFILE

SCALE: NONE

1. LOCATION OF BORINGS SHOWN ON THE PLAN THUS: TB-2
2. BORINGS ARE TAKEN FOR PURPOSE OF DESIGN AND SHOW CONDITIONS AT BORING POINTS ONLY, BUT DO NOT NECESSARILY SHOW THE NATURE OF THE MATERIALS TO BE ENCOUNTERED DURING CONSTRUCTION.
3. WATER LEVELS SHOWN ON THE BORING LOGS WERE OBSERVED AT THE TIME OF TAKING BORINGS AND DO NOT NECESSARILY SHOW THE TRUE GROUND WATER LEVEL.
4. FIGURES IN COLUMNS INDICATE NUMBER OF BLOWS REQUIRED TO DRIVE A 1 3/8" I.D. SPLIT SPOON SAMPLER 6" USING A 140 POUND WEIGHT FALLING 30".
5. BORING SAMPLES ARE STORED AT A STORAGE FACILITY LOCATED ON ROUTE 114 (219 WINTHROP AVE.) IN LAWRENCE, MA. THE CONTRACTOR MAY EXAMINE THE SOIL AND ROCK SAMPLES BY CONTACTING THE MASSDOT GEOTECHNICAL SECTION AT 10 PARK PLAZA, BOSTON, MA.
6. ALL BORINGS WERE MADE IN 2009.
7. BORINGS WERE MADE BY LAMSON ENGINEERING CORP.
8. THE NORTH AMERICAN VERTICAL DATUM (NAVD) OF 1988 IS USED THROUGHOUT.

XXXXXX_BR2(BXXXXX)_BORINGS.DWG Plotted on 3-Feb-2016 12:49 PM
Bruce Freeman Rail Trail Over Route 2 Sketch Plans Submittal (SP.1) 04-February-2016

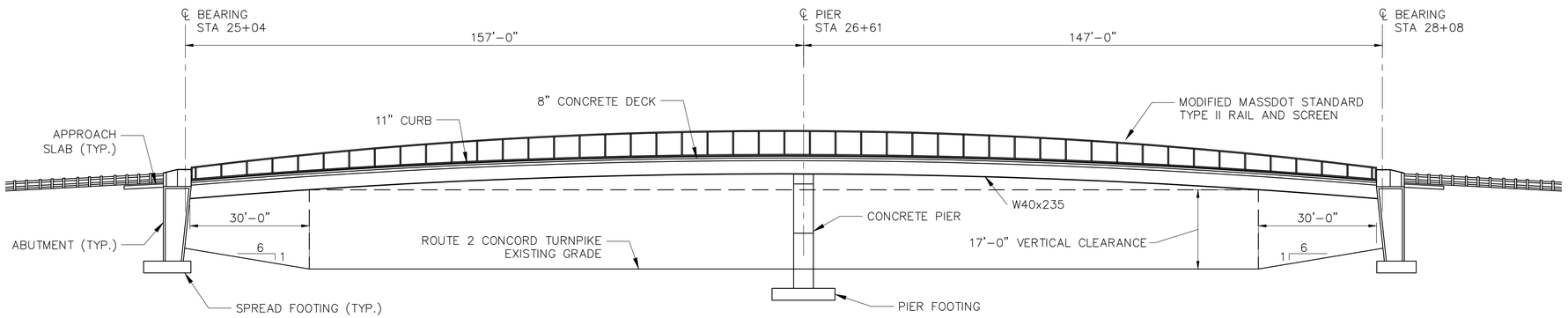

LONGITUDINAL SECTION
SCALE: 1/16" = 1'–0"

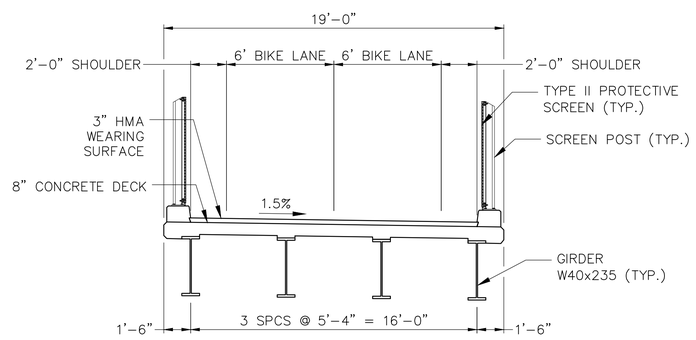

TRANSVERSE SECTION
SCALE: 1/4" = 1'–0"

XXXXXX_BR3(6XXXXX)_LONGITUDINAL AND TRANSVERSE SECTIONS.DWG Plotted on 3-Feb-2016 12:49 PM
Bruce Freeman Rail Trail Over Route 2 Sketch Plans Submittal (SP1) 04-February-2016

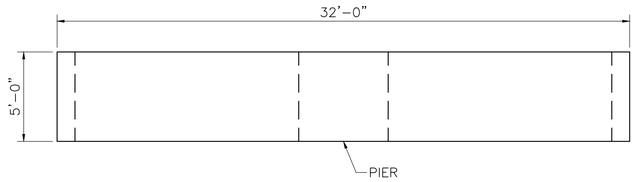

PIER PLAN
SCALE: 1/4" = 1'-0"

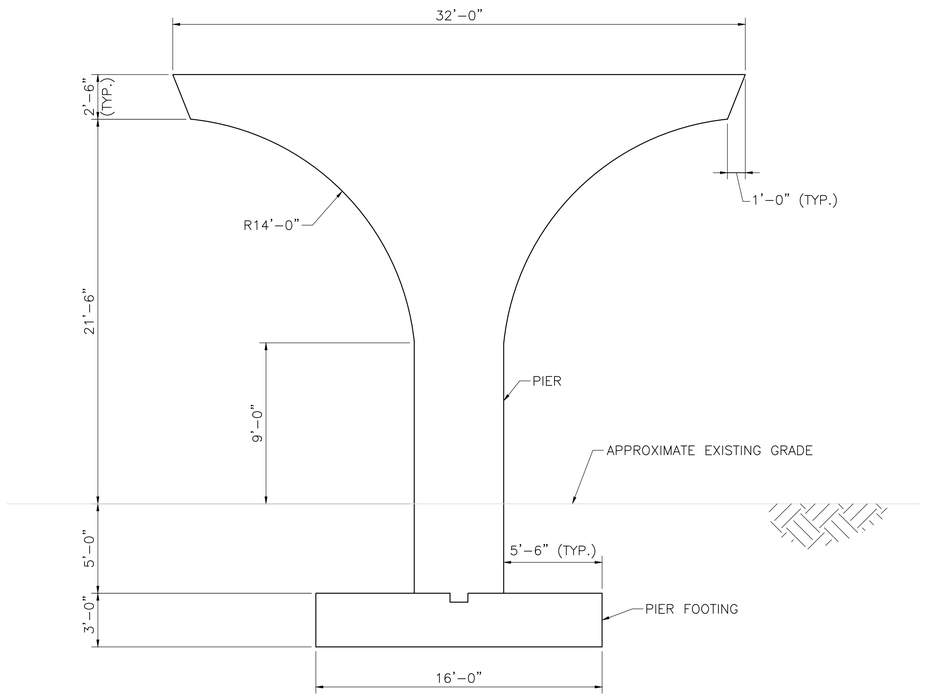

PIER FRONT ELEVATION
SCALE: 1/4" = 1'-0"

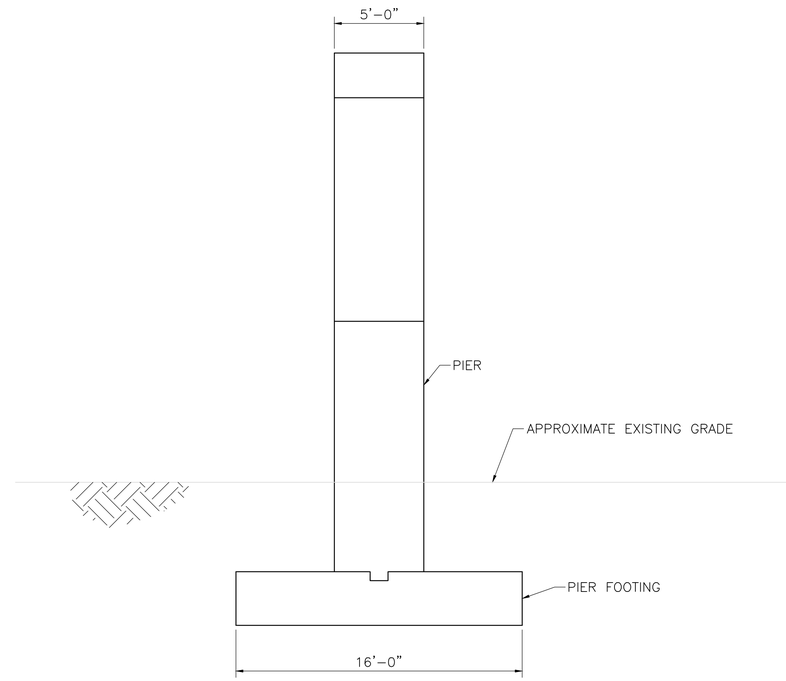

PIER SIDE ELEVATION
SCALE: 1/4" = 1'-0"

XXXXXX_BR4(BXXXXX)_ELEVATION OF PIER_ALT3.DWG Plotted on 3-Feb-2016 12:49 PM
Bruce Freeman Rail Trail Over Route 2 Sketch Plans Submittal (SP1) 04-February-2016

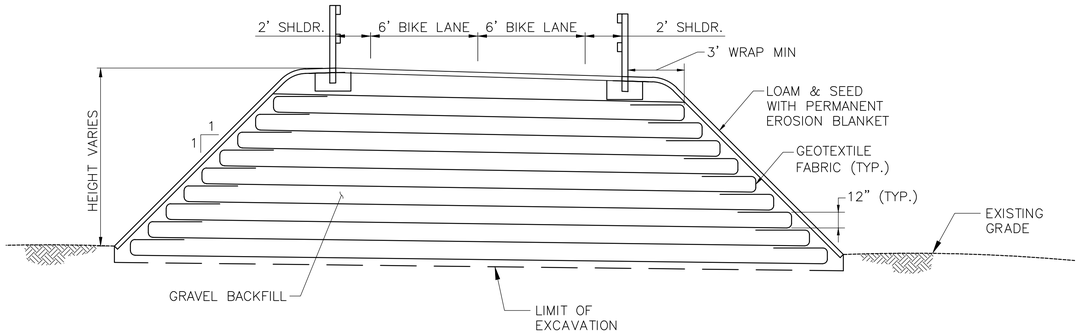

APPROACH SECTION
STA 21+80 TO 22+50
SCALE: 1/4" = 1'-0"

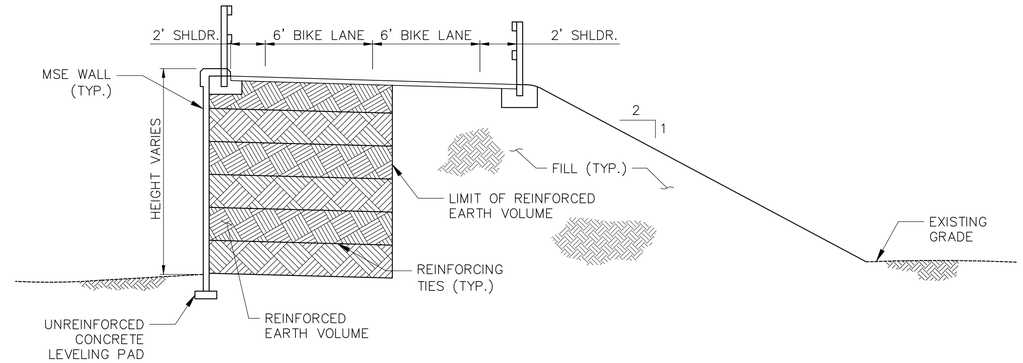

APPROACH SECTION
STA 22+50 TO 24+50
SCALE: 1/4" = 1'-0"

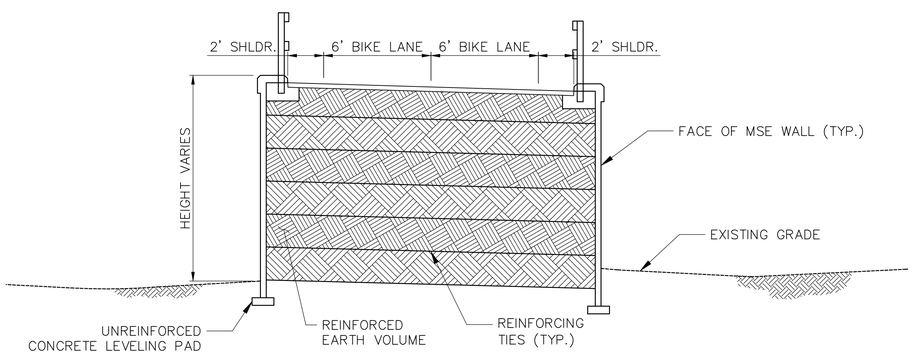

APPROACH SECTION
STA 24+50 TO 25+04
SCALE: 1/4" = 1'-0"

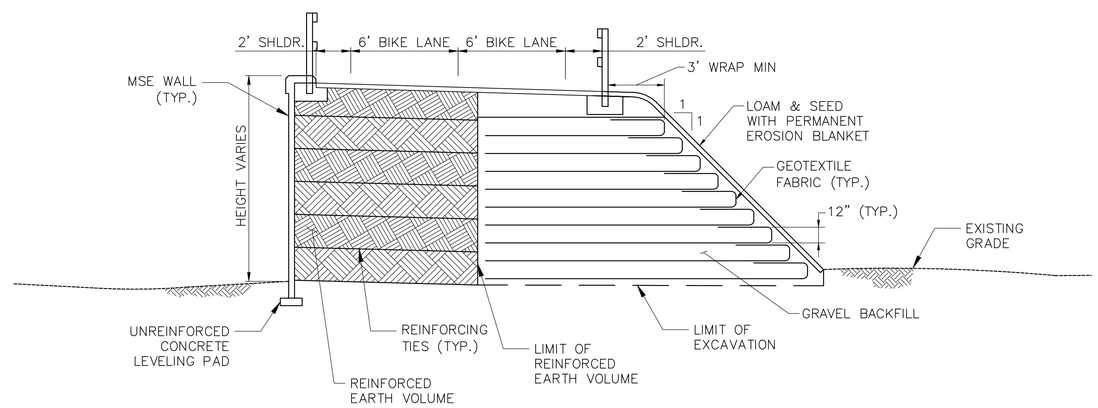

APPROACH SECTION
STA 28+08 TO 29+31
SCALE: 1/4" = 1'-0"

XXXXXX_BRS(BXXXXX)_APPROACH SECTIONS.DWG Plotted on 3-Feb-2016 12:50 PM
Bruce Freeman Rail Trail Over Route 2 Sketch Plans Submittal (SP1) 04-February-2016