GPI Calculations **Greenman-Pedersen, Inc.**

Location Concord **Job Number** MAX-2010031 (605189)
Title Bruce Freeman Rail Trail Phase 2C
Calculated By **Checked By**

Item Number	Quantity	Unit	Description	Unit Price	Total
100.	1	LS	Schedule Of Operations - Fixed Price $55500	$55,500.00	$ 55,500.00
101.	9	A	Clearing And Grubbing	$14,000.00	$ 131,600.00
102.3	96	HR	Control Of Invasive Plants Existing On Site	$220.00	$ 21,120.00
102.51	50	EA	Individual Tree Protection	$200.00	$ 10,000.00
102.52	3,280	FT	Roadside Tree Protection	$8.00	$ 26,240.00
103.	5	EA	Tree Removed - Diameter Under 24 Inches	$900.00	$ 4,500.00
120.1	11,000	CY	Unclassified Excavation	$25.00	$ 275,000.00
123.	100	CY	Muck Excavation	$32.00	$ 3,200.00
129.	3,230	SY	Pavement Milling	$18.00	$ 58,140.00
129.5	16,000	FT	Track Excavation	$16.00	$ 256,000.00
129.7	32,000	FT	Handling and Transporting of Rail Components	$3.00	$ 96,000.00
140.	2,745	CY	Bridge Excavation	$85.00	$ 233,325.00
140.2	160	CY	Ballast Excavation	$50.00	$ 8,000.00
141.	20	CY	Class A Trench Excavation	$27.00	$ 540.00
141.1	310	CY	Test Pit For Exploration	$75.00	$ 23,250.00
144.	10	CY	Class B Rock Excavation	$160.00	$ 1,600.00
146.	3	EA	Drainage Structure Removed	$500.00	$ 1,500.00
150.	5,500	CY	Ordinary Borrow	$25.00	$ 137,500.00
150.1	500	CY	Special Borrow	$35.00	$ 17,500.00
151.	6,500	CY	Gravel Borrow	$28.00	$ 182,000.00
151.1	100	CY	Gravel Borrow For Bridge Foundation	$45.00	$ 4,500.00
151.2	1,345	CY	Gravel Borrow For Backfilling Structures And Pipes	$40.00	$ 53,800.00
156.	5	TON	Crushed Stone	$40.00	$ 200.00
170.	32,000	SY	Fine Grading And Compacting	$3.00	$ 96,000.00
180.1	1	LS	Health And Safety Plan	$4,200.00	$ 4,200.00
180.2	80	HR	Implementation Of Health And Safety Plan	$95.00	$ 7,600.00
180.3	80	HR	Personnel Protection Level C Upgrade	$17.00	$ 1,360.00
180.5	120	HR	Licensed Site Professional	$130.00	$ 15,600.00
180.6	25	EA	Miscellaneous Soils Testing	$1,000.00	$ 25,000.00
181.11	400	TON	Disposal Of Unregulated Soil	$28.50	$ 11,400.00
181.12	175	TON	Disposal Of Regulated Soil - In-State Facility	$58.00	$ 10,150.00
181.13	100	TON	Disposal Of Regulated Soil - Out-Of-State Facility	$75.00	$ 7,500.00
181.14	1	TON	Disposal Of Hazardous Waste	$470.00	$ 470.00
181.2	2	EA	Battery Well And Signal Box Remove And Discard	$1,000.00	$ 2,000.00
183.1	1,000	GAL	Treatment Of Contaminated Groundwater	$10.00	$ 10,000.00
183.2	200	LB	Disposal Of Granular Activated Carbon	$10.00	$ 2,000.00
184.1	910	TON	Disposal Of Treated Wood Products	$150.00	$ 136,500.00
201.	9	EA	Catch Basin	$2,700.00	$ 24,300.00
202.	8	EA	Manhole	$3,000.00	$ 24,000.00
204.	1	EA	Gutter Inlet	$1,500.00	$ 1,500.00
205.	8	EA	Leaching Basin	$5,000.00	$ 40,000.00
220.	11	EA	Drainage Structure Adjusted	$330.00	$ 3,630.00
220.2	16	FT	Drainage Structure Rebuilt	$240.00	$ 3,840.00
220.3	3	EA	Drainage Structure Change In Type	$720.00	$ 2,160.00
220.8	2	EA	Sanitary Structure Remodeled	$750.00	$ 1,500.00
222.1	1	EA	Frame And Grate - MassDOT Cascade Type	$700.00	$ 700.00
222.3	27	EA	Frame And Grate (Or Cover) Municipal Standard	$800.00	$ 21,600.00
227.4	10	SF	Masonry Plug	$75.00	$ 750.00
238.1	200	FT	10 Inch Ductile Iron Pipe	$88.00	$ 17,600.00
238.12	650	FT	12 Inch Ductile Iron Pipe	$100.00	$ 65,000.00
241.12	300	FT	12 Inch Reinforced Concrete Pipe	$70.00	$ 21,000.00
241.15	500	FT	15 Inch Reinforced Concrete Pipe	$70.00	$ 35,000.00
241.3	45	FT	30 Inch Reinforced Concrete Pipe	$100.00	$ 4,500.00
244.12	100	FT	12 Inch Reinforced Concrete Pipe Class V	$80.00	$ 8,000.00
244.18	100	FT	18 Inch Reinforced Concrete Pipe Class V	$60.00	$ 6,000.00

GPI Calculations **Greenman-Pedersen, Inc.**

Location Concord **Job Number** MAX-2010031 (605189)
Title Bruce Freeman Rail Trail Phase 2C
Calculated By **Checked By**

Item Number	Quantity	Unit	Description	Unit Price	Total
252.10	5	EA	10 Inch Corrugated Plastic Pipe Flared End	$860.00	$ 4,300.00
252.112	7	EA	12 Inch Corrugated Plastic Pipe Flared End	$500.00	$ 3,500.00
258.	4	SY	Stone For Pipe Ends	$50.00	$ 175.00
269.06	50	FT	6 Inch Slot-Perforated Corrugated Plastic Pipe (Subdrain)	$50.00	$ 2,500.00
290.1	1	LS	Infiltration Basin	$15,000.00	$ 15,000.00
295.01	1	LS	Bioretention Basin	$12,500.00	$ 12,500.00
303.06	6	FT	6 Inch Ductile Iron Water Pipe (Mechanical Joint)	$93.00	$ 558.00
303.12	250	FT	12 Inch Ductile Iron Water Pipe (Mechanical Joint)	$200.00	$ 50,000.00
309.	1,100	LB	Ductile Iron Fittings For Water Pipe	$6.00	$ 6,600.00
325.14	70	FT	14 Inch Steel Pipe Casing For Water Pipe	$200.00	$ 14,000.00
358.	7	EA	Gate Box Adjusted	$170.00	$ 1,190.00
358.1	1	EA	Gate Box Removed And Stacked	$200.00	$ 200.00
370.4	1	EA	12 X 6 Inch Tapping Sleeve, Valve And Box	$6,000.00	$ 6,000.00
371.12	2	EA	12 Inch Coupling	$1,000.00	$ 2,000.00
376.2	1	EA	Hydrant - Removed And Reset	$1,900.00	$ 1,900.00
381.3	1	EA	Service Box Adjusted	$130.00	$ 130.00
390.01	1	LS	Remove Water Faucet	$1,000.00	$ 1,000.00
402.	150	CY	Dense Graded Crushed Stone For Sub-Base	$60.00	$ 9,000.00
440.	48,000	LB	Calcium Chloride For Roadway Dust Control	$0.30	$ 14,400.00
443.	100	MGL	Water For Roadway Dust Control	$60.00	$ 6,000.00
450.9	5,100	TON	Contractor Quality Control	$4.00	$ 20,400.00
451.	20	TON	HMA For Patching	$185.00	$ 3,700.00
452.	1,460	GAL	Asphalt Emulsion For Tack Coat	$8.00	$ 11,680.00
453.	2,500	FT	HMA Joint Sealant	$0.50	$ 1,250.00
455.22	1,900	TON	Superpave Surface Course – 9.5 (SSC – 9.5)	$110.00	$ 209,000.00
455.32	3,200	TON	Superpave Intermediate Course - 19.0 (SIC - 19.0)	$105.00	$ 336,000.00
455.42	260	TON	Superpave Base Course - 37.5 (SBC - 37.5)	$105.00	$ 27,300.00
455.61	20	TON	Superpave Bridge Surface Course - 12.5 (SSC-B - 12.5)	$150.00	$ 3,000.00
455.71	25	TON	Superpave Bridge Protective Course – 12.5 (SPC-B - 12.5)	$160.00	$ 4,000.00
456.	5,100	TON	Warm-Mix Asphalt Pavement	$3.00	$ 15,300.00
458.61	10	TON	Railroad Ballast	$50.00	$ 500.00
472.	20	TON	Hot Mix Asphalt For Miscellaneous Work	$182.00	$ 3,640.00
482.3	2,000	FT	Sawcutting Asphalt Pavement	$2.00	$ 4,000.00
490.001	1	LS	Rail-Highway Crossing (AARDOT XXX-XXXX)	$31,300.00	$ 31,300.00
506.	2,000	FT	Granite Curb Type VB - Straight	$35.00	$ 70,000.00
506.1	1,500	FT	Granite Curb Type VB - Curved	$38.00	$ 57,000.00
509.	300	FT	Granite Transition Curb For Wheelchair Ramps - Straight	$45.00	$ 13,500.00
509.1	150	FT	Granite Transition Curb For Wheelchair Ramps - Curved	$52.00	$ 7,800.00
511.1	200	FT	Granite Edging Type SB - Straight	$25.00	$ 5,000.00
512.1	55	FT	Granite Edging Type SB (Radius 10 Feet Or Less)	$37.00	$ 2,035.00
514.	4	EA	Granite Curb Inlet - Straight	$320.00	$ 1,280.00
580.	200	FT	Curb Removed And Reset	$20.00	$ 4,000.00
594.	850	FT	Curb Removed And Discarded	$5.00	$ 4,250.00
620.1	300	FT	Steel W Beam Highway Guard (Single Faced)	$25.00	$ 7,500.00
620.4	2	EA	Steel W Beam Highway Guard Buried End (Single Faced)	$700.00	$ 1,400.00
627.1	2	EA	Steel W Beam Terminal Section (Single Faced)	$50.00	$ 100.00
635.1	400	FT	Highway Guard Removed And Discarded	$3.00	$ 1,200.00
645.172	700	FT	72 Inch Chain Link Fence (PTR) Vinyl Coated (Line Post Opt.)	$38.00	$ 26,600.00
655.01	7,500	FT	Timber Rail Fence	$35.00	$ 262,500.00
655.04	2,000	FT	48" Three-Rail Bolted Timber Fence	$50.00	$ 100,000.00
656.1	800	FT	Ornamental Steel Fence	$50.00	$ 40,000.00
656.2	65	FT	Wrought Iron Fence	$100.00	$ 6,500.00
657.	200	FT	Temporary Fence	$10.00	$ 2,000.00
657.5	200	FT	Temporary Fence Removed And Reset	$8.00	$ 1,600.00

GPI Calculations **Greenman-Pedersen, Inc.**

Location Concord **Job Number** MAX-2010031 (605189)
Title Bruce Freeman Rail Trail Phase 2C
Calculated By **Checked By**

Item Number	Quantity	Unit	Description	Unit Price	Total
660.01	200	FT	Handrails	$100.00	$ 20,000.00
665.	200	FT	Chain Link Fence Removed And Stacked	$6.00	$ 1,200.00
665.3	200	FT	72 Inch Stockade Fence	$40.00	$ 8,000.00
666.	250	FT	Chain Link Fence Removed And Reset	$28.00	$ 7,000.00
669.	20	FT	Fence Removed And Stacked	$10.00	$ 200.00
669.5	300	FT	Fence Removed And Discard	$10.00	$ 3,000.00
673.	1	EA	Steel Pipe Access Gate	$4,000.00	$ 4,000.00
685.	4	CY	Stone Masonry Wall In Cement Mortar	$700.00	$ 2,450.00
690.	10	CY	Stone Masonry Wall Removed And Rebuilt In Cement Mortar	$500.00	$ 5,000.00
691.01	10	EA	Landscape Boulder	$500.00	$ 5,000.00
701.	460	SY	Cement Concrete Sidewalk	$58.00	$ 26,680.00
701.2	140	SY	Cement Concrete Wheelchair Ramp	$75.00	$ 10,500.00
702.	1,020	TON	Hot Mix Asphalt Walk Surface	$150.00	$ 153,000.00
703.	930	TON	Hot Mix Asphalt Driveway	$172.00	$ 159,960.00
704.2	1,000	TON	Stone Dust	$80.00	$ 80,000.00
707.1	10	EA	Park Bench	$2,650.00	$ 26,500.00
707.15	2	EA	Park Bench Removed And Reset	$780.00	$ 1,560.00
707.7	1	EA	Display Board	$500.00	$ 500.00
707.81	4	EA	Steel Bollard Removed and Discarded	$50.00	$ 200.00
707.9	3	EA	Bicycle Rack	$1,300.00	$ 3,900.00
708.25	30	SY	Cement Concrete Paver Island	$50.00	$ 1,500.00
708.35	650	SY	Pervious Cement Concrete Paver	$200.00	$ 130,000.00
710.8	12	EA	Granite Mile Marker	$1,000.00	$ 12,000.00
710.85	2	EA	Granite Post Sign	$1,500.00	$ 3,000.00
710.9	10	EA	Granite Pier	$2,000.00	$ 20,000.00
714.51	5	EA	Granite Monument Removed and Reset	$800.00	$ 4,000.00
714.6	1	LS	Semaphore Repair	$5,000.00	$ 5,000.00
714.7	2	EA	Historic Sign Repaired and Reset	$500.00	$ 1,000.00
714.8	2	EA	Battery Well And Signal Box Remove And Relocated	$1,000.00	$ 2,000.00
734.2	7	EA	Sign - Interpretive - NPS Standard	$800.00	$ 5,600.00
734.3	5	EA	Sign - Interpretive - NPS 18"x24"	$800.00	$ 4,000.00
740.	26	MO	Engineers Field Office And Equipment (Type A)	$2,600.00	$ 67,600.00
748.	1	LS	Mobilization	$213,601.92	$ 213,601.92
751.7	16,000	SY	Compost Topsoil	$6.00	$ 96,000.00
755.3	1	LS	Non-Tidal Wetland Mitigation Areas	$5,000.00	$ 5,000.00
755.7	20	HR	Wetland Specialist	$200.00	$ 4,000.00
756.	1	LS	NPDES Stormwater Pollution Prevention Plan	$4,500.00	$ 4,500.00
765.4	16,000	SY	Seeding - Restoration Mix	$2.00	$ 32,000.00
767.12	17,000	FT	Compost Filter Tubes	$2.00	$ 34,000.00
767.31	3,500	SY	Straw Mulch	$1.00	$ 3,500.00
767.9	2,000	SY	Matting For Erosion Control	$5.00	$ 10,000.00
772.438	3	EA	Hemlock - Canada 7-8 Feet	$500.00	$ 1,500.00
773.037	18	EA	Pine - Austrian 7-8 Feet	$500.00	$ 9,000.00
773.437	28	EA	Pine - White 7-8 Feet	$500.00	$ 14,000.00
775.027	4	EA	Elm - American - 'Valley Forge' 2-2.5 Inch Caliper	$500.00	$ 2,000.00
775.405	5	EA	Locust - Honey 2-2.5 Inch Caliper	$500.00	$ 2,500.00
776.543	6	EA	Maple - Red - 'October Glory' 2-2.5 Inch Caliper	$400.00	$ 2,400.00
777.138	2	EA	Oak - Pin 2-2.5 Inch Caliper	$500.00	$ 1,000.00
777.263	3	EA	Oak - Swamp White 2-2.5 Inch Caliper	$500.00	$ 1,500.00
777.654	5	EA	Serviceberry - Rainbbow Pillar 5-6 Feet	$500.00	$ 2,500.00
785.632	18	EA	Inkberry 24-30 Inch	$150.00	$ 2,700.00
786.672	6	EA	Mountain Laurel 30-36 Inch	$150.00	$ 900.00
787.084	10	EA	Rhodo- Roseberry 36-48 Inch	$150.00	$ 1,500.00
789.917	15	EA	Chokeberry - Black 24-30 Inch	$150.00	$ 2,250.00

GPI Calculations **Greenman-Pedersen, Inc.**

Location Concord **Job Number** MAX-2010031 (605189)
Title Bruce Freeman Rail Trail Phase 2C
Calculated By **Checked By**

Item Number	Quantity	Unit	Description	Unit Price	Total
789.925	30	EA	Chokeberry - Red 24-30 Inch	$150.00	$ 4,500.00
790.632	22	EA	Dogwood - Redosier 24-30 Inch	$50.00	$ 1,100.00
790.711	10	EA	Dogwood -Silky 24-30 Inch	$100.00	$ 1,000.00
792.431	8	EA	Lilac - Common Purple 2.5-3 Feet	$100.00	$ 800.00
794.323	25	EA	Sumac Shrub - Fragrant 18-24 Inch	$50.00	$ 1,250.00
794.734	8	EA	Summersweet Shrub 24-30 Inch	$100.00	$ 800.00
795.005	44	EA	Viburnum - American Cranberry 24-30 Inch	$100.00	$ 4,400.00
795.153	9	EA	Winterberry - Male 24-30 Inch	$50.00	$ 450.00
795.157	10	EA	Winterberry - Female 24-30 Inch	$50.00	$ 500.00
804.3	350	FT	3 Inch Electrical Conduit Type NM - Plastic -(UL)	$32.50	$ 11,375.00
811.31	6	EA	Pull Box 12 X 12 Inches - Sd2.031	$430.00	$ 2,580.00
811.36	4	EA	Electric Manhole Adjusted	$500.00	$ 2,000.00
815.15	1	LS	Rail-Highway Crossing Active Warning System (AARDOT XXX-XXXX)	$90,000.00	$ 90,000.00
816.01	1	LS	Traffic Signal Reconstruction Location No. 1	$119,975.00	$ 119,975.00
816.80	1	LS	Traffic Control Signal Removed And Stacked	$900.00	$ 900.00
816.81	1	LS	Temporary Traffic Control Signal	$50,000.00	$ 50,000.00
824.01	1	LS	Rectangular Rapid-Flash Beacons, Location No. 1	$15,000.00	$ 15,000.00
824.02	1	LS	Rectangular Rapid-Flash Beacons, Location No. 2	$15,000.00	$ 15,000.00
824.03	1	LS	Rectangular Rapid-Flash Beacons, Location No. 3	$15,000.00	$ 15,000.00
826.25	1	LS	Surveillance Camera	$40,000.00	$ 40,000.00
826.7	1	EA	Electric Service Relocation	$500.00	$ 500.00
826.8	1	LS	Telegraph Pole Overhead Wire Removed and Discarded	$5,000.00	$ 5,000.00
826.95	1	LS	HVAC Condenser Removed and Stacked	$500.00	$ 500.00
832.	710	SF	Warning-Regulatory And Route Marker - Alum. Panel (Type A)	$11.00	$ 7,810.00
832.1	6	EA	Trail Rules Sign	$500.00	$ 3,000.00
833.5	5	EA	Demountable Reflectorized Delineator - Guard Rail	$5.50	$ 27.50
833.7	5	EA	Delineation For Guard Rail Termini	$32.00	$ 160.00
847.1	135	EA	Sign Sup (N/Guide)+Rte Mkr W/1 Brkway Post Assembly - Steel	$87.00	$ 11,745.00
848.1	20	EA	Sign Sup (N/Guide)+Rte Mkr W/2 Brkway Post Assemblies-Steel	$125.00	$ 2,500.00
850.41	350	HR	Roadway Flagger	$55.00	$ 19,250.00
852.	790	SF	Safety Signing For Traffic Management	$18.00	$ 14,220.00
853.1	9	EA	Portable Breakaway Barricade Type III	$129.00	$ 1,161.00
853.2	500	FT	Temporary Barrier	$300.00	$ 150,000.00
853.21	650	FT	Temporary Barrier Removed And Reset	$300.00	$ 195,000.00
853.3	250	FT	Temporary Restrained Barrier	$300.00	$ 75,000.00
853.41	3	EA	Temp.Imp.Attenuator For Shldr, Incapable Of Redirection	$300.00	$ 900.00
853.411	4	EA	Temp.Imp.Attenuator For Shldr, Incapable Of Redirection R&R	$300.00	$ 1,200.00
854.016	1,000	FT	Temporary Paving Markings - 6 Inch (Painted)	$0.40	$ 400.00
854.1	500	SF	Pavement Marking Removal	$1.15	$ 575.00
856.12	850	DAY	Portable Changeable Message Sign	$1.15	$ 977.50
859.	8,500	DAY	Reflectorized Drum	$0.50	$ 4,250.00
864.04	900	SF	Pavement Arrows And Legends Refl. White (Thermoplastic)	$4.70	$ 4,230.00
865.1	4,100	SF	Cross Walks And Stop Lines Refl. White (Thermoplastic)	$2.00	$ 8,200.00
866.04	3,400	FT	4 Inch Reflectorized White Line (Thermoplastic)	$0.70	$ 2,380.00
867.04	3,900	FT	4 Inch Reflectorized Yellow Line (Thermoplastic)	$0.70	$ 2,730.00
874.	4	EA	Street Name Sign	$80.00	$ 320.00
874.45	20	EA	Traffic Sign Removed and Discarded	$50.00	$ 1,000.00
874.75	3	EA	Miscellaneous Signs Removed And Reset	$100.00	$ 300.00
901.	6	CY	4000 Psi, 1.5 In., 565 Cement Concrete	$1,600.00	$ 9,600.00
901.3	30	CY	4000 Psi, 1.5 In., 565 Cement Concrete For Post Foundation	$360.00	$ 10,800.00
903.	20	CY	3000 Psi, 1.5 In., 470 Cement Concrete	$320.00	$ 6,400.00
910.1	70	LB	Steel Reinforcement For Structures - Epoxy Coated	$2.50	$ 175.00
950.1	1	LS	Temporary Shoring	$380,000.00	$ 380,000.00
955.1	8	EA	Removal and Replacement of Timber Cross Tie	$370.00	$ 2,960.00

GPI Calculations **Greenman-Pedersen, Inc.**

Location Concord **Job Number** MAX-2010031 (605189)
Title Bruce Freeman Rail Trail Phase 2C
Calculated By **Checked By**

Item Number	Quantity	Unit	Description	Unit Price	Total
983.52	90	CY	Modified Rock Fill	$60.00	$ 5,400.00
995.011	1	LS	Culvert Structure, Culvert No. C-19-015 (XXX)	$600,000.00	$ 600,000.00
995.02	1	LS	Bridge Structure, Bridge No. C-19-031 (XXX)	$336,000.00	$ 336,000.00
995.03	1	LS	Bridge Structure, Bridge No. C-19-032 (A5R)	$279,000.00	$ 279,000.00
			TOTAL		**$7,389,165.92**
			GPI Design Contingency (15%)		$1,108,375
			Estimate		**$8,497,540.81**

GPI Calculations **Greenman-Pedersen, Inc.**

Location Concord **Job Number** MAX-2010031 (605189)
Title Bruce Freeman Rail Trail Phase 2C
Calculated By **Checked By**

Item Number	Description
100.	Schedule Of Operations - Fixed Price $55500
101.	Clearing And Grubbing
102.3	Control Of Invasive Plants Existing On Site
102.51	Individual Tree Protection
102.52	Roadside Tree Protection
103.	Tree Removed - Diameter Under 24 Inches
120.1	Unclassified Excavation
123.	Muck Excavation
129.	Pavement Milling
129.5	Track Excavation
129.7	Handling and Transporting of Rail Components
140.	Bridge Excavation
140.2	Ballast Excavation
141.	Class A Trench Excavation
141.1	Test Pit For Exploration
144.	Class B Rock Excavation
146.	Drainage Structure Removed
150.	Ordinary Borrow
150.1	Special Borrow
151.	Gravel Borrow
151.1	Gravel Borrow For Bridge Foundation
151.2	Gravel Borrow For Backfilling Structures And Pipes
156.	Crushed Stone
170.	Fine Grading And Compacting
180.1	Health And Safety Plan
180.2	Implementation Of Health And Safety Plan
180.3	Personnel Protection Level C Upgrade
180.5	Licensed Site Professional
180.6	Miscellaneous Soils Testing
181.11	Disposal Of Unregulated Soil
181.12	Disposal Of Regulated Soil - In-State Facility
181.13	Disposal Of Regulated Soil - Out-Of-State Facility
181.14	Disposal Of Hazardous Waste
181.2	Battery Well And Signal Box Remove And Discard
183.1	Treatment Of Contaminated Groundwater
183.2	Disposal Of Granular Activated Carbon
184.1	Disposal Of Treated Wood Products
201.	Catch Basin
202.	Manhole
204.	Gutter Inlet
205.	Leaching Basin
220.	Drainage Structure Adjusted
220.2	Drainage Structure Rebuilt
220.3	Drainage Structure Change In Type
220.8	Sanitary Structure Remodeled
222.1	Frame And Grate - MassDOT Cascade Type
222.3	Frame And Grate (Or Cover) Municipal Standard
227.4	Masonry Plug
238.1	10 Inch Ductile Iron Pipe
238.12	12 Inch Ductile Iron Pipe
241.12	12 Inch Reinforced Concrete Pipe
241.15	15 Inch Reinforced Concrete Pipe

GPI Calculations **Greenman-Pedersen, Inc.**

Location Concord **Job Number** MAX-2010031 (605189)
Title Bruce Freeman Rail Trail Phase 2C
Calculated By **Checked By**

Item Number	Description
241.3	30 Inch Reinforced Concrete Pipe
244.12	12 Inch Reinforced Concrete Pipe Class V
244.18	18 Inch Reinforced Concrete Pipe Class V
252.1	10 Inch Corrugated Plastic Pipe Flared End
252.112	12 Inch Corrugated Plastic Pipe Flared End
258.	Stone For Pipe Ends
269.06	6 Inch Slot-Perforated Corrugated Plastic Pipe (Subdrain)
290.1	Infiltration Basin
295.01	Bioretention Basin
303.06	6 Inch Ductile Iron Water Pipe (Mechanical Joint)
303.12	12 Inch Ductile Iron Water Pipe (Mechanical Joint)
309.	Ductile Iron Fittings For Water Pipe
325.14	14 Inch Steel Pipe Casing For Water Pipe
358.	Gate Box Adjusted
358.1	Gate Box Removed And Stacked
370.4	12 X 6 Inch Tapping Sleeve, Valve And Box
371.12	12 Inch Coupling
376.2	Hydrant - Removed And Reset
381.3	Service Box Adjusted
390.01	Remove Water Faucet
402.	Dense Graded Crushed Stone For Sub-Base
440.	Calcium Chloride For Roadway Dust Control
443.	Water For Roadway Dust Control
450.9	Contractor Quality Control
451.	HMA For Patching
452.	Asphalt Emulsion For Tack Coat
453.	HMA Joint Sealant
455.22	Superpave Surface Course – 9.5 (SSC – 9.5)
455.32	Superpave Intermediate Course - 19.0 (SIC - 19.0)
455.42	Superpave Base Course - 37.5 (SBC - 37.5)
455.61	Superpave Bridge Surface Course - 12.5 (SSC-B - 12.5)
455.71	Superpave Bridge Protective Course – 12.5 (SPC-B - 12.5)
456.	Warm-Mix Asphalt Pavement
458.61	Railroad Ballast
472.	Hot Mix Asphalt For Miscellaneous Work
482.3	Sawcutting Asphalt Pavement
490.001	Rail-Highway Crossing (AARDOT XXX-XXXX)
506.	Granite Curb Type VB - Straight
506.1	Granite Curb Type VB - Curved
509.	Granite Transition Curb For Wheelchair Ramps - Straight
509.1	Granite Transition Curb For Wheelchair Ramps - Curved
511.1	Granite Edging Type SB - Straight
512.1	Granite Edging Type SB (Radius 10 Feet Or Less)
514.	Granite Curb Inlet - Straight
580.	Curb Removed And Reset
594.	Curb Removed And Discarded
620.1	Steel W Beam Highway Guard (Single Faced)
620.4	Steel W Beam Highway Guard Buried End (Single Faced)
627.1	Steel W Beam Terminal Section (Single Faced)
635.1	Highway Guard Removed And Discarded
645.172	72 Inch Chain Link Fence (PTR) Vinyl Coated (Line Post Opt.)
655.01	Timber Rail Fence
655.04	48" Three-Rail Bolted Timber Fence

GPI Calculations

Greenman-Pedersen, Inc.

Location Concord **Job Number** MAX-2010031 (605189)
Title Bruce Freeman Rail Trail Phase 2C
Calculated By **Checked By**

Item Number	Description
656.1	Ornamental Steel Fence
656.2	Wrought Iron Fence
657.	Temporary Fence
657.5	Temporary Fence Removed And Reset
660.01	Handrails
665.	Chain Link Fence Removed And Stacked
665.3	72 Inch Stockade Fence
666.	Chain Link Fence Removed And Reset
669.	Fence Removed And Stacked
669.5	Fence Removed And Discard
673.	Steel Pipe Access Gate
685.	Stone Masonry Wall In Cement Mortar
690.	Stone Masonry Wall Removed And Rebuilt In Cement Mortar
691.01	Landscape Boulder
701.	Cement Concrete Sidewalk
701.2	Cement Concrete Wheelchair Ramp
702.	Hot Mix Asphalt Walk Surface
703.	Hot Mix Asphalt Driveway
704.2	Stone Dust
707.1	Park Bench
707.15	Park Bench Removed And Reset
707.7	Display Board
707.81	Steel Bollard Removed and Discarded
707.9	Bicycle Rack
708.25	Cement Concrete Paver Island
708.35	Pervious Cement Concrete Paver
710.8	Granite Mile Marker
710.85	Granite Post Sign
710.9	Granite Pier
714.51	Granite Monument Removed and Reset
714.6	Semaphore Repair
714.7	Historic Sign Repaired and Reset
714.8	Battery Well And Signal Box Remove And Relocated
734.2	Sign - Interpretive - NPS Standard
734.3	Sign - Interpretive - NPS 18"x24"
740.	Engineers Field Office And Equipment (Type A)
748.	Mobilization
751.7	Compost Topsoil
755.3	Non-Tidal Wetland Mitigation Areas
755.7	Wetland Specialist
756.	NPDES Stormwater Pollution Prevention Plan
765.4	Seeding - Restoration Mix
767.12	Compost Filter Tubes
767.31	Straw Mulch
767.9	Matting For Erosion Control
772.438	Hemlock - Canada 7-8 Feet
773.037	Pine - Austrian 7-8 Feet
773.437	Pine - White 7-8 Feet
775.027	Elm - American - 'Valley Forge' 2-2.5 Inch Caliper
775.405	Locust - Honey 2-2.5 Inch Caliper
776.543	Maple - Red - 'October Glory' 2-2.5 Inch Caliper
777.138	Oak - Pin 2-2.5 Inch Caliper
777.263	Oak - Swamp White 2-2.5 Inch Caliper

GPI Calculations **Greenman-Pedersen, Inc.**

Location Concord **Job Number** MAX-2010031 (605189)
Title Bruce Freeman Rail Trail Phase 2C
Calculated By **Checked By**

Item Number	Description
777.654	Serviceberry - Rainbbow Pillar 5-6 Feet
785.632	Inkberry 24-30 Inch
786.672	Mountain Laurel 30-36 Inch
787.084	Rhodo- Roseberry 36-48 Inch
789.917	Chokeberry - Black 24-30 Inch
789.925	Chokeberry - Red 24-30 Inch
790.632	Dogwood - Redosier 24-30 Inch
790.711	Dogwood -Silky 24-30 Inch
792.431	Lilac - Common Purple 2.5-3 Feet
794.323	Sumac Shrub - Fragrant 18-24 Inch
794.734	Summersweet Shrub 24-30 Inch
795.005	Viburnum - American Cranberry 24-30 Inch
795.153	Winterberry - Male 24-30 Inch
795.157	Winterberry - Female 24-30 Inch
804.3	3 Inch Electrical Conduit Type NM - Plastic -(UL)
811.31	Pull Box 12 X 12 Inches - Sd2.031
811.36	Electric Manhole Adjusted
815.15	Rail-Highway Crossing Active Warning System (AARDOT XXX-XXXX)
816.01	Traffic Signal Reconstruction Location No. 1
816.8	Traffic Control Signal Removed And Stacked
816.81	Temporary Traffic Control Signal
824.01	Rectangular Rapid-Flash Beacons, Location No. 1
824.02	Rectangular Rapid-Flash Beacons, Location No. 2
824.03	Rectangular Rapid-Flash Beacons, Location No. 3
826.25	Surveillance Camera
826.7	Electric Service Relocation
826.8	Telegraph Pole Overhead Wire Removed and Discarded
826.95	HVAC Condenser Removed and Stacked
832.	Warning-Regulatory And Route Marker - Alum. Panel (Type A)
832.1	Trail Rules Sign
833.5	Demountable Reflectorized Delineator - Guard Rail
833.7	Delineation For Guard Rail Termini
847.1	Sign Sup (N/Guide)+Rte Mkr W/1 Brkway Post Assembly - Steel
848.1	Sign Sup (N/Guide)+Rte Mkr W/2 Brkway Post Assemblies-Steel
850.41	Roadway Flagger
852.	Safety Signing For Traffic Management
853.1	Portable Breakaway Barricade Type III
853.2	Temporary Barrier
853.21	Temporary Barrier Removed And Reset
853.3	Temporary Restrained Barrier
853.41	Temp.Imp.Attenuator For Shldr, Incapable Of Redirection
853.411	Temp.Imp.Attenuator For Shldr, Incapable Of Redirection R&R
854.016	Temporary Paving Markings - 6 Inch (Painted)
854.1	Pavement Marking Removal
856.12	Portable Changeable Message Sign
859.	Reflectorized Drum
864.04	Pavement Arrows And Legends Refl. White (Thermoplastic)
865.1	Cross Walks And Stop Lines Refl. White (Thermoplastic)
866.04	4 Inch Reflectorized White Line (Thermoplastic)
867.04	4 Inch Reflectorized Yellow Line (Thermoplastic)
874.	Street Name Sign
874.45	Traffic Sign Removed and Discarded
874.75	Miscellaneous Signs Removed And Reset
901.	4000 Psi, 1.5 In., 565 Cement Concrete

GPI Calculations

Greenman-Pedersen, Inc.

Location Concord **Job Number** MAX-2010031 (605189)
Title Bruce Freeman Rail Trail Phase 2C
Calculated By **Checked By**

Item Number	Description
901.3	4000 Psi, 1.5 In., 565 Cement Concrete For Post Foundation
903.	3000 Psi, 1.5 In., 470 Cement Concrete
910.1	Steel Reinforcement For Structures - Epoxy Coated
950.1	Temporary Shoring
955.1	Removal and Replacement of Timber Cross Tie
983.52	Modified Rock Fill
995.011	Culvert Structure, Culvert No. C-19-015 (XXX)
995.02	Bridge Structure, Bridge No. C-19-031 (XXX)
995.03	Bridge Structure, Bridge No. C-19-032 (A5R)

GPI Calculations

Greenman-Pedersen, Inc.

Location Concord

Title Bruce Freeman Rail Trail Phase 2C

Calculated By

Job Number MAX-2010031 (605189)

Checked By

BFRT 2C		EARTH EXCAVATION											
		Cut			Fill			Unsuitable Cut			Unsuitable Cut & Refill		
Station	Length (ft)	P.R. (ft^2)	Av.R. (ft^2)	Vol. (ft^3)	P.R. (ft^2)	Av.R. (ft^2)	Vol. (ft^3)	P.R. (ft^2)	Av.R. (ft^2)	Vol. (ft^3)	P.R. (ft^2)	Av.R. (ft^2)	Vol. (ft^3)
1+00		4.99			0.00			5.89			0.00		
	25		10.60	265.00		0.00	0.00		8.58	214.50		0.09	2.25
1+25		16.21			0.00			11.27			0.18		
	25		9.47	236.63		0.00	0.00		8.02	200.50		0.43	10.63
1+50		2.72			0.00			4.77			0.67		
	50		1.36	68.00		1.91	95.50		2.60	129.75		3.00	150.00
2+00		0.00			3.82			0.42			5.33		
	50		0.00	0.00		6.21	310.50		0.42	21.00		6.10	304.75
2+50		0.00			8.60			0.42			6.86		
	50		0.00	0.00		9.55	477.25		0.32	16.00		7.23	361.25
3+00		0.00			10.49			0.22			7.59		
	50		0.16	8.00		7.90	394.75		1.17	58.25		6.40	319.75
3+50		0.32			5.30			2.11			5.20		
	50		0.48	24.00		4.81	240.25		1.75	87.50		5.05	252.25
4+00		0.64			4.31			1.39			4.89		
	50		0.42	20.75		3.30	164.75		1.79	89.50		4.74	237.00
4+50		0.19			2.28			2.19			4.59		
	50		0.10	4.75		2.39	119.25		1.65	82.50		4.90	245.00
5+00		0.00			2.49			1.11			5.21		
	50		0.00	0.00		2.19	109.50		1.87	93.25		4.81	240.50
5+50		0.00			1.89			2.62			4.41		
	50		0.98	48.75		1.27	63.25		3.45	172.50		3.32	165.75
6+00		1.95			0.64			4.28			2.22		
	50		0.98	48.75		1.14	56.75		3.38	168.75		3.50	174.75
6+50		0.00			1.63			2.47			4.77		
	50		1.71	85.25		2.07	103.25		3.12	156.00		3.62	180.75
7+00		3.41			2.50			3.77			2.46		
	50		2.24	112.00		1.30	64.75		4.44	221.75		2.18	108.75
7+50		1.07			0.09			5.10			1.89		
	50		1.78	88.75		0.37	18.50		5.20	260.00		1.99	99.50
8+00		2.48			0.65			5.30			2.09		
	50		2.19	109.25		1.47	73.50		4.14	207.00		2.90	145.00
8+50		1.89			2.29			2.98			3.71		
	50		0.95	47.25		2.88	144.00		1.89	94.25		5.20	260.00
9+00		0.00			3.47			0.79			6.69		
	50		0.00	0.00		4.42	221.00		0.61	30.50		7.21	360.25
9+50		0.00			5.37			0.43			7.72		
	50		0.00	0.00		4.70	234.75		0.36	17.75		7.17	358.25
10+00		0.00			4.02			0.28			6.61		
	50		0.00	0.00		4.09	204.50		0.62	31.00		6.41	320.50
10+50		0.00			4.16			0.96			6.21		
	50		0.11	5.25		2.20	110.00		2.18	109.00		4.80	239.75

GPI Calculations

Greenman-Pedersen, Inc.

Location Concord
Title Bruce Freeman Rail Trail Phase 2C
Calculated By

Job Number MAX-2010031 (605189)
Checked By

BFRT 2C		EARTH EXCAVATION											
		Cut			Fill			Unsuitable Cut			Unsuitable Cut & Refill		
Station	Length (ft)	P.R. (ft^2)	Av.R. (ft^2)	Vol. (ft^3)	P.R. (ft^2)	Av.R. (ft^2)	Vol. (ft^3)	P.R. (ft^2)	Av.R. (ft^2)	Vol. (ft^3)	P.R. (ft^2)	Av.R. (ft^2)	Vol. (ft^3)
11+00		0.21			0.24			3.40			3.38		
	50		2.37	118.50		0.12	6.00		4.55	227.50		1.74	87.00
11+50		4.53			0.00			5.70			0.10		
	50		6.61	330.25		0.00	0.00		5.59	279.50		0.05	2.50
12+00		8.68			0.00			5.48			0.00		
	50		10.56	528.00		0.00	0.00		5.60	279.75		0.00	0.00
12+50		12.44			0.00			5.71			0.00		
	50		13.02	651.00		0.00	0.00		5.43	271.25		0.00	0.00
13+00		13.60			0.00			5.14			0.00		
	50		13.99	699.50		0.00	0.00		5.71	285.25		0.00	0.00
13+50		14.38			0.00			6.27			0.00		
	50		15.34	767.00		0.00	0.00		6.21	310.50		0.00	0.00
14+00		16.30			0.00			6.15			0.00		
	50		14.63	731.50		0.00	0.00		5.72	286.00		0.00	0.00
14+50		12.96			0.00			5.29			0.00		
	50		13.31	665.50		0.00	0.00		5.60	279.75		0.05	2.25
15+00		13.66			0.00			5.90			0.09		
	50		13.38	668.75		0.00	0.00		6.01	300.50		0.05	2.25
15+50		13.09			0.00			6.12			0.00		
	50		12.40	619.75		0.00	0.00		6.10	305.00		0.18	8.75
16+00		11.70			0.00			6.08			0.35		
	50		9.77	488.50		0.00	0.00		5.98	298.75		0.18	8.75
16+50		7.84			0.00			5.87			0.00		
	10		11.58	115.80		0.00	0.00		7.01	70.05		0.00	0.00
16+60		15.32			0.00			8.14			0.00		
	40		11.25	450.00		0.00	0.00		7.04	281.40		0.16	6.40
17+00		7.18			0.00			5.93			0.32		
	50		5.92	295.75		0.00	0.00		5.63	281.25		0.26	13.00
17+50		4.65			0.00			5.32			0.20		
	50		2.82	141.00		0.17	8.50		4.18	209.00		1.81	90.50
18+00		0.99			0.34			3.04			3.42		
	50		0.50	24.75		3.49	174.50		1.75	87.50		4.81	240.25
18+50		0.00			6.64			0.46			6.19		
	50		0.00	0.00		8.66	432.75		0.35	17.25		6.26	312.75
19+00		0.00			10.67			0.23			6.32		
	50		0.00	0.00		10.83	541.50		0.21	10.50		6.38	319.00
19+50		0.00			10.99			0.19			6.44		
	50		0.00	0.00		8.77	438.50		0.19	9.50		6.59	329.50
20+00		0.00			6.55			0.19			6.74		
	50		0.00	0.00		5.03	251.25		0.69	34.50		6.55	327.50
20+50		0.00			3.50			1.19			6.36		
	50		0.00	0.00		2.38	118.75		1.87	93.50		5.32	265.75
21+00		0.00			1.25			2.55			4.27		
	50		0.00	0.00		2.28	114.00		1.71	85.50		5.23	261.25

GPI Calculations

Greenman-Pedersen, Inc.

Location Concord
Title Bruce Freeman Rail Trail Phase 2C
Calculated By

Job Number MAX-2010031 (605189)
Checked By

BFRT 2C		EARTH EXCAVATION											
		Cut			Fill			Unsuitable Cut			Unsuitable Cut & Refill		
Station	Length (ft)	P.R. (ft^2)	Av.R. (ft^2)	Vol. (ft^3)	P.R. (ft^2)	Av.R. (ft^2)	Vol. (ft^3)	P.R. (ft^2)	Av.R. (ft^2)	Vol. (ft^3)	P.R. (ft^2)	Av.R. (ft^2)	Vol. (ft^3)
21+50		0.00			3.31			0.87			6.18		
	50		0.16	8.00		2.70	134.75		2.17	108.25		5.16	257.75
22+00		0.32			2.08			3.46			4.13		
	50		0.95	47.50		1.23	61.50		4.22	210.75		2.98	149.00
22+50		1.58			0.38			4.97			1.83		
	50		2.65	132.25		0.19	9.50		5.32	266.00		0.92	45.75
23+00		3.71			0.00			5.67			0.00		
	50		2.80	140.00		0.00	0.00		5.79	289.25		0.00	0.00
23+50		1.89			0.00			5.90			0.00		
	50		1.43	71.25		0.24	12.00		4.67	233.25		1.66	83.00
24+00		0.96			0.48			3.43			3.32		
	50		0.52	26.00		0.29	14.50		3.22	161.00		3.48	174.00
24+50		0.08			0.10			3.01			3.64		
	50		0.11	5.50		0.53	26.25		2.09	104.25		4.45	222.25
25+00		0.14			0.95			1.16			5.25		
	50		0.07	3.50		2.61	130.25		0.67	33.25		5.96	298.00
25+50		0.00			4.26			0.17			6.67		
	50		0.00	0.00		9.70	485.00		0.15	7.50		6.78	339.00
26+00		0.00			15.14			0.13			6.89		
	50		0.00	0.00		15.67	783.25		0.14	7.00		6.98	349.00
26+50		0.00			16.19			0.15			7.07		
	50		0.00	0.00		18.74	936.75		0.13	6.50		7.24	361.75
27+00		0.00			21.28			0.11			7.40		
	50		0.00	0.00		19.79	989.25		0.13	6.25		7.42	370.75
27+50		0.00			18.29			0.14			7.43		
	20		0.00	0.00		14.97	299.40		0.24	4.80		7.47	149.40
27+70		0.00			11.65			0.34			7.51		
	30		7.95	238.50		5.83	174.75		3.82	114.60		3.76	112.65
28+00		15.90			0.00			7.30			0.00		
	49		146.38	7172.62		0.00	0.00		7.51	367.99		0.00	0.00
28+49		276.86			0.00			7.72			0.00		
	1		138.43	138.43		113.00	113.00		3.86	3.86		0.00	0.00
28+50		0.00			226.00			0.00			0.00		
	50		0.00	0.00		226.00	11300.00		0.00	0.00		0.00	0.00
29+00		0.00			226.00			0.00			0.00		
	25		247.00	6174.88		226.00	5650.00		6.67	166.75		0.00	0.00
29+25		493.99			226.00			13.34			0.00		
	0		247.00	0.00		113.00	0.00		6.67	0.00		0.00	0.00
29+25		0.00			0.00			0.00			0.00		
	25		32.66	816.50		0.00	0.00		4.96	123.88		0.00	0.00
29+50		65.32			0.00			9.91			0.00		
	50		32.72	1635.75		1.56	78.00		5.39	269.25		2.57	128.25
30+00		0.11			3.12			0.86			5.13		
	50		0.32	16.00		1.76	88.00		1.66	83.00		4.48	223.75

GPI Calculations

Greenman-Pedersen, Inc.

Location Concord
Title Bruce Freeman Rail Trail Phase 2C
Calculated By

Job Number MAX-2010031 (605189)
Checked By

BFRT 2C		EARTH EXCAVATION											
		Cut			Fill			Unsuitable Cut			Unsuitable Cut & Refill		
Station	Length (ft)	P.R. (ft^2)	Av.R. (ft^2)	Vol. (ft^3)	P.R. (ft^2)	Av.R. (ft^2)	Vol. (ft^3)	P.R. (ft^2)	Av.R. (ft^2)	Vol. (ft^3)	P.R. (ft^2)	Av.R. (ft^2)	Vol. (ft^3)
30+50		0.53			0.40			2.46			3.82		
	50		1.48	74.00		0.20	10.00		4.00	199.75		1.95	97.25
31+00		2.43			0.00			5.53			0.07		
	50		3.38	168.75		0.00	0.00		5.57	278.25		0.04	1.75
31+50		4.32			0.00			5.60			0.00		
	30		3.53	105.75		0.00	0.00		5.49	164.70		0.11	3.15
31+80		2.73			0.00			5.38			0.21		
	20		2.95	59.00		0.00	0.00		5.59	111.80		0.16	3.20
32+00		3.17			0.00			5.80			0.11		
	50		13.99	699.50		0.00	0.00		7.47	373.50		0.06	2.75
32+50		24.81			0.00			9.14			0.00		
	50		27.99	1399.50		0.00	0.00		9.11	455.25		0.34	16.75
33+00		31.17			0.00			9.07			0.67		
	50		24.54	1226.75		0.00	0.00		9.53	476.50		0.34	16.75
33+50		17.90			0.00			9.99			0.00		
	50		9.45	472.25		0.00	0.00		7.86	392.75		0.11	5.50
34+00		0.99			0.00			5.72			0.22		
	50		0.79	39.50		0.00	0.00		4.84	242.00		0.91	45.50
34+50		0.59			0.00			3.96			1.60		
	50		0.30	14.75		0.00	0.00		3.77	188.25		1.98	98.75
35+00		0.00			0.00			3.57			2.35		
	50		0.75	37.50		0.03	1.25		4.32	216.00		1.79	89.25
35+50		1.50			0.05			5.07			1.22		
	50		0.86	43.00		0.03	1.25		4.39	219.25		1.44	71.75
36+00		0.22			0.00			3.70			1.65		
	50		0.55	27.25		0.00	0.00		3.90	195.00		1.30	64.75
36+50		0.87			0.00			4.10			0.94		
	50		0.45	22.25		0.88	44.00		2.50	125.00		3.13	156.50
37+00		0.02			1.76			0.90			5.32		
	50		0.04	1.75		1.89	94.25		0.80	39.75		5.02	251.00
37+50		0.05			2.01			0.69			4.72		
	50		0.04	1.75		1.87	93.25		0.63	31.50		5.21	260.25
38+00		0.02			1.72			0.57			5.69		
	50		0.01	0.50		1.26	62.75		0.92	45.75		5.43	271.25
38+50		0.00			0.79			1.26			5.16		
	50		0.00	0.00		0.68	33.75		1.29	64.50		5.12	256.00
39+00		0.00			0.56			1.32			5.08		
	50		0.00	0.00		0.49	24.25		1.83	91.25		4.73	236.50
39+50		0.00			0.41			2.33			4.38		
	50		0.00	0.00		0.40	20.00		2.42	121.00		3.97	198.25
40+00		0.00			0.39			2.51			3.55		
	50		0.48	23.75		0.59	29.25		2.93	146.25		2.90	145.00
40+50		0.95			0.78			3.34			2.25		
	50		1.96	97.75		1.20	59.75		3.55	177.25		2.39	119.50

GPI Calculations

Greenman-Pedersen, Inc.

Location Concord

Title Bruce Freeman Rail Trail Phase 2C

Calculated By

Job Number MAX-2010031 (605189)

Checked By

BFRT 2C		EARTH EXCAVATION											
		Cut			Fill			Unsuitable Cut			Unsuitable Cut & Refill		
Station	Length (ft)	P.R. (ft^2)	Av.R. (ft^2)	Vol. (ft^3)	P.R. (ft^2)	Av.R. (ft^2)	Vol. (ft^3)	P.R. (ft^2)	Av.R. (ft^2)	Vol. (ft^3)	P.R. (ft^2)	Av.R. (ft^2)	Vol. (ft^3)
41+00		2.96			1.61			3.75			2.53		
	50		6.43	321.25		0.81	40.25		4.40	219.75		1.27	63.25
41+50		9.89			0.00			5.04			0.00		
	50		10.27	513.50		0.00	0.00		5.12	255.75		0.00	0.00
42+00		10.65			0.00			5.19			0.00		
	50		11.91	595.50		0.00	0.00		6.27	313.25		0.00	0.00
42+50		13.17			0.00			7.34			0.00		
	50		17.79	889.50		0.00	0.00		7.26	362.75		0.00	0.00
43+00		22.41			0.00			7.17			0.00		
	50		22.00	1099.75		0.00	0.00		7.15	357.25		0.00	0.00
43+50		21.58			0.00			7.12			0.00		
	50		21.59	1079.50		0.00	0.00		6.86	343.00		0.00	0.00
44+00		21.60			0.00			6.60			0.00		
	50		22.52	1126.00		0.00	0.00		7.33	366.25		0.00	0.00
44+50		23.44			0.00			8.05			0.00		
	50		22.65	1132.50		0.00	0.00		7.47	373.25		0.00	0.00
45+00		21.86			0.00			6.88			0.00		
	50		26.31	1315.50		0.00	0.00		7.20	360.00		0.00	0.00
45+50		30.76			0.00			7.52			0.00		
	50		30.20	1510.00		0.00	0.00		7.56	377.75		0.00	0.00
46+00		29.64			0.00			7.59			0.00		
	50		30.58	1529.00		0.00	0.00		7.42	371.00		0.00	0.00
46+50		31.52			0.00			7.25			0.00		
	50		31.05	1552.50		0.00	0.00		7.28	364.00		0.00	0.00
47+00		30.58			0.00			7.31			0.00		
	50		25.04	1251.75		0.00	0.00		6.58	328.75		0.00	0.00
47+50		19.49			0.00			5.84			0.00		
	50		15.04	751.75		0.00	0.00		5.85	292.50		0.00	0.00
48+00		10.58			0.00			5.86			0.00		
	50		7.84	392.00		0.00	0.00		5.20	260.00		0.37	18.50
48+50		5.10			0.00			4.54			0.74		
	50		7.19	359.50		0.00	0.00		4.67	233.25		0.37	18.50
49+00		9.28			0.00			4.79			0.00		
	50		7.13	356.25		0.00	0.00		4.95	247.25		0.04	2.00
49+50		4.97			0.00			5.10			0.08		
	50		5.10	255.00		0.00	0.00		5.62	280.75		0.34	16.75
50+00		5.23			0.00			6.13			0.59		
	50		2.90	144.75		0.00	0.00		5.20	260.00		0.84	41.75
50+50		0.56			0.00			4.27			1.08		
	50		2.11	105.50		0.04	1.75		4.64	231.75		1.10	54.75
51+00		3.66			0.07			5.00			1.11		
	50		2.57	128.50		0.04	1.75		4.96	247.75		1.02	51.00
51+50		1.48			0.00			4.91			0.93		
	50		1.60	80.00		0.00	0.00		5.18	259.00		0.77	38.50

GPI Calculations

Greenman-Pedersen, Inc.

Location Concord

Title Bruce Freeman Rail Trail Phase 2C

Calculated By

Job Number MAX-2010031 (605189)

Checked By

BFRT 2C		EARTH EXCAVATION											
		Cut			Fill			Unsuitable Cut			Unsuitable Cut & Refill		
Station	Length (ft)	P.R. (ft^2)	Av.R. (ft^2)	Vol. (ft^3)	P.R. (ft^2)	Av.R. (ft^2)	Vol. (ft^3)	P.R. (ft^2)	Av.R. (ft^2)	Vol. (ft^3)	P.R. (ft^2)	Av.R. (ft^2)	Vol. (ft^3)
52+00		1.72			0.00			5.45			0.61		
	25		3.93	98.13		8.21	205.25		5.67	141.75		2.96	73.88
52+25		6.13			16.42			5.89			5.30		
	25		5.75	143.75		8.21	205.25		5.81	145.25		2.86	71.38
52+50		5.37			0.00			5.73			0.41		
	50		3.79	189.50		0.00	0.00		5.26	263.00		0.21	10.25
53+00		2.21			0.00			4.79			0.00		
	50		1.38	69.00		0.00	0.00		5.26	263.00		0.31	15.50
53+50		0.55			0.00			5.73			0.62		
	50		3.72	186.00		0.00	0.00		5.45	272.25		0.31	15.50
54+00		6.89			0.00			5.16			0.00		
	50		8.56	427.75		0.00	0.00		5.63	281.50		0.00	0.00
54+50		10.22			0.00			6.10			0.00		
	50		10.26	513.00		0.00	0.00		6.08	304.00		0.00	0.00
55+00		10.30			0.00			6.06			0.00		
	50		13.54	676.75		0.00	0.00		7.14	356.75		0.00	0.00
55+50		16.77			0.00			8.21			0.00		
	50		15.42	771.00		0.00	0.00		7.69	384.50		0.00	0.00
56+00		14.07			0.00			7.17			0.00		
	50		11.63	581.25		0.00	0.00		7.48	373.75		0.00	0.00
56+50		9.18			0.00			7.78			0.00		
	50		7.64	382.00		0.02	1.00		6.93	346.50		0.93	46.50
57+00		6.10			0.04			6.08			1.86		
	50		6.31	315.25		0.22	11.00		5.42	271.00		2.53	126.50
57+50		6.51			0.40			4.76			3.20		
	50		5.45	272.25		1.93	96.50		3.64	182.00		4.46	223.00
58+00		4.38			3.46			2.52			5.72		
	50		2.22	110.75		3.21	160.25		1.61	80.25		5.64	282.00
58+50		0.05			2.95			0.69			5.56		
	50		0.03	1.25		2.50	124.75		0.69	34.25		5.85	292.25
59+00		0.00			2.04			0.68			6.13		
	50		0.00	0.00		1.19	59.50		1.49	74.50		4.89	244.50
59+50		0.00			0.34			2.30			3.65		
	50		1.94	97.00		0.17	8.50		3.48	174.00		1.83	91.25
60+00		3.88			0.00			4.66			0.00		
	50		5.92	295.75		0.00	0.00		4.66	233.00		0.00	0.00
60+50		7.95			0.00			4.66			0.00		
	50		10.15	507.25		0.00	0.00		5.13	256.25		0.00	0.00
61+00		12.34			0.00			5.59			0.00		
	50		10.39	519.25		0.00	0.00		5.56	278.00		0.00	0.00
61+50		8.43			0.00			5.53			0.00		
	50		5.01	250.50		0.12	6.00		5.27	263.50		0.93	46.50
62+00		1.59			0.24			5.01			1.86		
	50		0.80	39.75		3.62	181.00		2.81	140.25		4.66	233.00

GPI Calculations

Greenman-Pedersen, Inc.

Location Concord
Title Bruce Freeman Rail Trail Phase 2C
Calculated By

Job Number MAX-2010031 (605189)
Checked By

BFRT 2C		EARTH EXCAVATION											
		Cut			Fill			Unsuitable Cut			Unsuitable Cut & Refill		
Station	Length (ft)	P.R. (ft^2)	Av.R. (ft^2)	Vol. (ft^3)	P.R. (ft^2)	Av.R. (ft^2)	Vol. (ft^3)	P.R. (ft^2)	Av.R. (ft^2)	Vol. (ft^3)	P.R. (ft^2)	Av.R. (ft^2)	Vol. (ft^3)
62+50		0.00			7.00			0.60			7.46		
	50		0.18	9.00		4.11	205.50		1.51	75.50		5.93	296.25
63+00		0.36			1.22			2.42			4.39		
	15		6.67	99.98		0.73	10.95		5.41	81.15		2.97	44.55
63+15		12.97			0.24			8.40			1.55		
	35		9.73	340.38		0.12	4.20		8.27	289.28		0.84	29.23
63+50		6.48			0.00			8.13			0.12		
	50		3.24	162.00		3.49	174.25		4.19	209.25		3.34	167.00
64+00		0.00			6.97			0.24			6.56		
	50		4.22	211.00		4.18	209.00		1.95	97.50		5.65	282.25
64+50		8.44			1.39			3.66			4.73		
	50		4.22	211.00		1.78	88.75		1.95	97.25		5.99	299.25
65+00		0.00			2.16			0.23			7.24		
	50		0.00	0.00		1.65	82.25		0.69	34.50		6.81	340.50
65+50		0.00			1.13			1.15			6.38		
	50		0.00	0.00		1.10	54.75		1.12	55.75		6.06	302.75
66+00		0.00			1.06			1.08			5.73		
	50		0.00	0.00		0.77	38.50		1.18	59.00		5.33	266.25
66+50		0.00			0.48			1.28			4.92		
	50		0.00	0.00		0.71	35.50		0.84	42.00		5.50	274.75
67+00		0.00			0.94			0.40			6.07		
	50		0.00	0.00		4.06	203.00		0.44	22.00		6.46	322.75
67+50		0.00			7.18			0.48			6.84		
	50		0.00	0.00		8.22	410.75		0.38	19.00		6.68	333.75
68+00		0.00			9.25			0.28			6.51		
	50		0.05	2.25		6.67	333.50		0.65	32.25		5.92	296.00
68+50		0.09			4.09			1.01			5.33		
	50		0.05	2.25		4.31	215.25		0.81	40.25		5.84	291.75
69+00		0.00			4.52			0.60			6.34		
	50		0.39	19.50		2.26	113.00		2.49	124.25		3.97	198.50
69+50		0.78			0.00			4.37			1.60		
	50		4.53	226.50		0.00	0.00		5.23	261.50		0.80	40.00
70+00		8.28			0.00			6.09			0.00		
	15		22.18	332.70		0.22	3.30		11.57	173.55		0.80	11.93
70+15		36.08			0.44			17.05			1.59		
	35		18.73	655.38		0.22	7.70		11.05	386.75		1.05	36.75
70+50		1.37			0.00			5.05			0.51		
	50		1.42	71.00		0.00	0.00		5.19	259.25		0.50	24.75
71+00		1.47			0.00			5.32			0.48		
	50		1.09	54.50		0.09	4.25		5.08	253.75		1.42	71.00
71+50		0.71			0.17			4.83			2.36		
	50		0.51	25.50		1.26	62.75		3.94	197.00		3.16	157.75
72+00		0.31			2.34			3.05			3.95		
	50		0.61	30.50		2.17	108.50		3.24	162.00		3.77	188.50

GPI Calculations

Greenman-Pedersen, Inc.

Location Concord

Title Bruce Freeman Rail Trail Phase 2C

Calculated By

Job Number MAX-2010031 (605189)

Checked By

BFRT 2C		EARTH EXCAVATION											
		Cut			Fill			Unsuitable Cut			Unsuitable Cut & Refill		
Station	Length (ft)	P.R. (ft^2)	Av.R. (ft^2)	Vol. (ft^3)	P.R. (ft^2)	Av.R. (ft^2)	Vol. (ft^3)	P.R. (ft^2)	Av.R. (ft^2)	Vol. (ft^3)	P.R. (ft^2)	Av.R. (ft^2)	Vol. (ft^3)
72+50		0.91			2.00			3.43			3.59		
	50		0.59	29.50		3.48	173.75		2.95	147.50		4.55	227.50
73+00		0.27			4.95			2.47			5.51		
	50		0.14	6.75		6.52	326.00		1.32	65.75		6.62	330.75
73+50		0.00			8.09			0.16			7.72		
	50		0.02	0.75		7.38	368.75		0.71	35.50		7.18	358.75
74+00		0.03			6.66			1.26			6.63		
	50		0.02	0.75		7.08	354.00		0.80	40.00		6.66	332.75
74+50		0.00			7.50			0.34			6.68		
	50		0.00	0.00		12.70	634.75		0.27	13.25		7.05	352.25
75+00		0.00			17.89			0.19			7.41		
	50		18.98	949.00		8.95	447.25		4.17	208.25		3.71	185.25
75+50		37.96			0.00			8.14			0.00		
	30		30.19	905.70		0.00	0.00		8.29	248.70		0.00	0.00
75+80		22.42			0.00			8.44			0.00		
	20		11.21	224.20		0.00	0.00		4.22	84.40		0.00	0.00
76+00		0.00			0.00			0.00			0.00		
	11		6.50	71.45		0.00	0.00		1.81	19.86		0.00	0.00
76+11		12.99			0.00			3.61			0.00		
	39		6.52	254.09		2.01	78.39		2.52	98.28		2.18	84.83
76+50		0.04			4.02			1.43			4.35		
	50		0.02	1.00		2.25	112.50		1.57	78.25		4.61	230.50
77+00		0.00			0.48			1.70			4.87		
	50		0.11	5.25		1.27	63.25		2.13	106.25		4.76	238.00
77+50		0.21			2.05			2.55			4.65		
	50		0.65	32.25		1.45	72.25		2.59	129.25		3.82	191.00
78+00		1.08			0.84			2.62			2.99		
	50		0.57	28.50		0.66	33.00		2.35	117.25		3.31	165.50
78+50		0.06			0.48			2.07			3.63		
	50		0.37	18.50		0.40	20.00		3.27	163.25		2.94	147.00
79+00		0.68			0.32			4.46			2.25		
	50		0.34	17.00		1.79	89.25		3.09	154.50		4.47	223.50
79+50		0.00			3.25			1.72			6.69		
	50		0.03	1.25		1.63	81.25		2.46	123.00		4.55	227.50
80+00		0.05			0.00			3.20			2.41		
	50		1.29	64.25		0.00	0.00		4.00	199.75		1.21	60.25
80+50		2.52			0.00			4.79			0.00		
	50		2.90	145.00		0.00	0.00		4.76	237.75		0.25	12.50
81+00		3.28			0.00			4.72			0.50		
	50		3.69	184.50		0.00	0.00		5.00	249.75		0.64	31.75
81+50		4.10			0.00			5.27			0.77		
	50		3.12	155.75		0.00	0.00		5.77	288.25		0.78	38.75
82+00		2.13			0.00			6.26			0.78		
	50		3.80	190.00		0.00	0.00		5.46	273.00		0.39	19.50

GPI Calculations

Greenman-Pedersen, Inc.

Location Concord

Title Bruce Freeman Rail Trail Phase 2C

Calculated By

Job Number MAX-2010031 (605189)

Checked By

BFRT 2C		EARTH EXCAVATION											
		Cut			Fill			Unsuitable Cut			Unsuitable Cut & Refill		
Station	Length (ft)	P.R. (ft^2)	Av.R. (ft^2)	Vol. (ft^3)	P.R. (ft^2)	Av.R. (ft^2)	Vol. (ft^3)	P.R. (ft^2)	Av.R. (ft^2)	Vol. (ft^3)	P.R. (ft^2)	Av.R. (ft^2)	Vol. (ft^3)
82+50		5.47			0.00			4.66			0.00		
	50		8.09	404.50		0.00	0.00		4.92	245.75		0.00	0.00
83+00		10.71			0.00			5.17			0.00		
	50		12.79	639.25		0.00	0.00		5.62	280.75		0.00	0.00
83+50		14.86			0.00			6.06			0.00		
	50		13.17	658.25		0.00	0.00		5.47	273.25		0.00	0.00
84+00		11.47			0.00			4.87			0.00		
	50		10.67	533.25		0.00	0.00		4.77	238.25		0.00	0.00
84+50		9.86			0.00			4.66			0.00		
	50		7.94	397.00		0.00	0.00		4.80	239.75		0.00	0.00
85+00		6.02			0.00			4.93			0.00		
	50		7.66	382.75		0.00	0.00		5.72	286.00		0.10	5.00
85+50		9.29			0.00			6.51			0.20		
	50		7.28	364.00		0.00	0.00		5.77	288.25		0.10	5.00
86+00		5.27			0.00			5.02			0.00		
	50		5.10	254.75		0.05	2.25		5.28	263.75		0.56	28.00
86+50		4.92			0.09			5.53			1.12		
	50		3.77	188.25		0.05	2.50		4.94	247.00		1.38	68.75
87+00		2.61			0.01			4.35			1.63		
	50		3.35	167.50		0.01	0.25		4.79	239.25		0.82	40.75
87+50		4.09			0.00			5.22			0.00		
	50		4.50	224.75		0.00	0.00		5.65	282.25		0.07	3.25
88+00		4.90			0.00			6.07			0.13		
	50		3.27	163.25		0.00	0.00		5.55	277.50		0.13	6.25
88+50		1.63			0.00			5.03			0.12		
	50		5.25	262.25		0.00	0.00		5.38	269.00		0.06	3.00
89+00		8.86			0.00			5.73			0.00		
	50		6.59	329.25		0.00	0.00		5.54	277.00		0.05	2.25
89+50		4.31			0.00			5.35			0.09		
	50		4.85	242.50		0.00	0.00		5.01	250.25		0.05	2.25
90+00		5.39			0.00			4.66			0.00		
	50		7.40	369.75		0.00	0.00		5.64	281.75		0.00	0.00
90+50		9.40			0.00			6.61			0.00		
	50		8.56	427.75		0.00	0.00		6.18	309.00		0.00	0.00
91+00		7.71			0.00			5.75			0.00		
	50		6.11	305.50		0.00	0.00		5.98	298.75		0.03	1.25
91+50		4.51			0.00			6.20			0.05		
	50		5.14	256.75		0.00	0.00		5.88	293.75		0.03	1.25
92+00		5.76			0.00			5.55			0.00		
	50		5.91	295.25		0.00	0.00		5.27	263.25		0.00	0.00
92+50		6.05			0.00			4.98			0.00		
	50		4.85	242.25		0.00	0.00		5.20	259.75		0.00	0.00
93+00		3.64			0.00			5.41			0.00		
	50		3.47	173.50		0.00	0.00		5.15	257.25		0.00	0.00

GPI Calculations

Greenman-Pedersen, Inc.

Location Concord

Title Bruce Freeman Rail Trail Phase 2C

Calculated By

Job Number MAX-2010031 (605189)

Checked By

BFRT 2C		EARTH EXCAVATION											
		Cut			Fill			Unsuitable Cut			Unsuitable Cut & Refill		
Station	Length (ft)	P.R. (ft^2)	Av.R. (ft^2)	Vol. (ft^3)	P.R. (ft^2)	Av.R. (ft^2)	Vol. (ft^3)	P.R. (ft^2)	Av.R. (ft^2)	Vol. (ft^3)	P.R. (ft^2)	Av.R. (ft^2)	Vol. (ft^3)
93+50		3.30			0.00			4.88			0.00		
	50		3.78	189.00		0.00	0.00		4.81	240.50		0.00	0.00
94+00		4.26			0.00			4.74			0.00		
	50		3.46	172.75		0.00	0.00		5.14	256.75		0.07	3.25
94+50		2.65			0.00			5.53			0.13		
	50		1.70	84.75		0.00	0.00		5.36	267.75		0.35	17.25
95+00		0.74			0.00			5.18			0.56		
	50		2.50	125.00		0.00	0.00		5.58	279.00		0.62	30.75
95+50		4.26			0.00			5.98			0.67		
	50		4.90	245.00		0.00	0.00		7.74	386.75		0.85	42.25
96+00		5.54			0.00			9.49			1.02		
	8		5.67	45.32		1.66	13.24		7.91	63.24		2.09	16.68
96+08		5.79			3.31			6.32			3.15		
	12		4.52	54.24		1.72	20.58		5.59	67.02		2.41	28.86
96+20		3.25			0.12			4.85			1.66		
	30		1.63	48.75		5.14	154.20		2.78	83.25		4.52	135.60
96+50		0.00			10.16			0.70			7.38		
	50		0.00	0.00		10.89	544.25		0.49	24.25		7.03	351.25
97+00		0.00			11.61			0.27			6.67		
	50		0.00	0.00		12.67	633.25		0.19	9.25		6.59	329.25
97+50		0.00			13.72			0.10			6.50		
	50		0.00	0.00		14.62	730.75		0.09	4.50		6.58	329.00
98+00		0.00			15.51			0.08			6.66		
	50		0.00	0.00		13.99	699.50		0.10	4.75		6.46	323.00
98+50		0.00			12.47			0.11			6.26		
	50		0.00	0.00		14.63	731.50		0.11	5.25		6.40	319.75
99+00		0.00			16.79			0.10			6.53		
	50		0.09	4.25		15.28	763.75		0.32	16.00		6.33	316.25
99+50		0.17			13.76			0.54			6.12		
	50		0.21	10.50		18.37	918.25		0.76	38.00		6.60	330.00
100+00		0.25			22.97			0.98			7.08		
	50		0.13	6.25		29.96	1497.75		0.57	28.50		7.57	378.50
100+50		0.00			36.94			0.16			8.06		
	50		0.00	0.00		39.83	1991.50		0.16	7.75		8.25	412.25
101+00		0.00			42.72			0.15			8.43		
	50		0.00	0.00		48.62	2430.75		0.22	11.00		8.90	445.00
101+50		0.00			54.51			0.29			9.37		
	50		0.00	0.00		55.42	2770.75		0.24	11.75		9.27	463.50
102+00		0.00			56.32			0.18			9.17		
	50		0.00	0.00		45.85	2292.25		0.17	8.25		8.79	439.25
102+50		0.00			35.37			0.15			8.40		
	50		0.85	42.50		18.72	936.00		2.07	103.50		6.27	313.50
103+00		1.70			2.07			3.99			4.14		
	40		8.70	348.00		1.22	48.80		5.66	226.20		2.33	93.20

GPI Calculations

Greenman-Pedersen, Inc.

Location Concord

Title Bruce Freeman Rail Trail Phase 2C

Calculated By

Job Number MAX-2010031 (605189)

Checked By

BFRT 2C		EARTH EXCAVATION											
		Cut			Fill			Unsuitable Cut			Unsuitable Cut & Refill		
Station	Length (ft)	P.R. (ft^2)	Av.R. (ft^2)	Vol. (ft^3)	P.R. (ft^2)	Av.R. (ft^2)	Vol. (ft^3)	P.R. (ft^2)	Av.R. (ft^2)	Vol. (ft^3)	P.R. (ft^2)	Av.R. (ft^2)	Vol. (ft^3)
103+40		15.70			0.37			7.32			0.52		
	10		7.85	78.50		0.19	1.85		3.66	36.60		0.26	2.60
103+50		0.00			0.00			0.00			0.00		
	10		10.96	109.55		0.00	0.00		3.63	36.25		0.00	0.00
103+60		21.91			0.00			7.25			0.00		
	40		19.51	780.40		0.00	0.00		6.69	267.40		0.00	0.00
104+00		17.11			0.00			6.12			0.00		
	50		12.89	644.50		0.00	0.00		5.82	291.00		0.26	12.75
104+50		8.67			0.00			5.52			0.51		
	50		4.43	221.25		0.00	0.00		4.97	248.25		0.92	46.00
105+00		0.18			0.00			4.41			1.33		
	50		0.25	12.25		0.00	0.00		4.15	207.25		1.68	83.75
105+50		0.31			0.00			3.88			2.02		
	50		0.64	32.00		0.00	0.00		4.63	231.50		1.60	80.00
106+00		0.97			0.00			5.38			1.18		
	50		7.70	384.75		0.00	0.00		6.79	339.50		0.59	29.50
106+50		14.42			0.00			8.20			0.00		
	50		7.29	364.25		0.35	17.50		5.14	257.00		2.01	100.25
107+00		0.15			0.70			2.08			4.01		
	50		4.87	243.25		0.38	19.00		3.55	177.50		3.14	157.00
107+50		9.58			0.06			5.02			2.27		
	50		8.76	438.00		0.03	1.50		5.88	293.75		1.32	66.00
108+00		7.94			0.00			6.73			0.37		
	50		4.45	222.25		0.00	0.00		5.53	276.50		0.78	39.00
108+50		0.95			0.00			4.33			1.19		
	50		0.58	28.75		0.06	3.00		3.35	167.50		2.49	124.50
109+00		0.20			0.12			2.37			3.79		
	50		0.22	10.75		1.48	73.75		1.65	82.50		4.26	213.00
109+50		0.23			2.83			0.93			4.73		
	50		0.25	12.50		3.52	176.00		1.31	65.25		4.96	247.75
110+00		0.27			4.21			1.68			5.18		
	50		0.33	16.25		2.16	107.75		1.99	99.50		4.41	220.25
110+50		0.38			0.10			2.30			3.63		
	50		0.96	48.00		0.54	27.00		2.91	145.25		3.09	154.25
111+00		1.54			0.98			3.51			2.54		
	50		0.79	39.25		2.93	146.25		2.10	105.00		3.76	187.75
111+50		0.03			4.87			0.69			4.97		
	50		0.02	0.75		4.02	200.75		0.74	36.75		5.49	274.25
112+00		0.00			3.16			0.78			6.00		
	50		0.09	4.50		3.33	166.50		0.84	42.00		5.33	266.25
112+50		0.18			3.50			0.90			4.65		
	50		0.09	4.50		4.29	214.25		0.89	44.50		4.91	245.50
113+00		0.00			5.07			0.88			5.17		
	50		0.00	0.00		4.78	239.00		0.87	43.25		5.07	253.25

GPI Calculations

Greenman-Pedersen, Inc.

Location Concord

Title Bruce Freeman Rail Trail Phase 2C

Calculated By

Job Number MAX-2010031 (605189)

Checked By

BFRT 2C		EARTH EXCAVATION											
		Cut			Fill			Unsuitable Cut			Unsuitable Cut & Refill		
Station	Length (ft)	P.R. (ft^2)	Av.R. (ft^2)	Vol. (ft^3)	P.R. (ft^2)	Av.R. (ft^2)	Vol. (ft^3)	P.R. (ft^2)	Av.R. (ft^2)	Vol. (ft^3)	P.R. (ft^2)	Av.R. (ft^2)	Vol. (ft^3)
113+50		0.00			4.49			0.85			4.96		
	50		0.09	4.50		4.63	231.25		0.86	42.75		5.17	258.50
114+00		0.18			4.76			0.86			5.38		
	50		0.09	4.50		2.96	148.00		1.37	68.50		5.27	263.25
114+50		0.00			1.16			1.88			5.15		
	50		0.06	3.00		0.76	38.00		1.97	98.50		4.41	220.25
115+00		0.12			0.36			2.06			3.66		
	50		0.44	21.75		0.18	9.00		2.83	141.25		2.72	135.75
115+50		0.75			0.00			3.59			1.77		
	50		0.50	25.00		4.05	202.50		3.22	160.75		2.86	142.75
116+00		0.25			8.10			2.84			3.94		
	15		2.28	34.13		4.08	61.13		3.96	59.33		2.59	38.85
116+15		4.30			0.05			5.07			1.24		
	35		2.15	75.25		0.03	0.88		2.54	88.73		0.62	21.70
116+50		0.00			0.00			0.00			0.00		
	50		0.00	0.00		0.00	0.00		0.00	0.00		0.00	0.00
117+00		0.00			0.00			0.00			0.00		
	15		0.82	12.30		1.83	27.45		1.08	16.13		1.86	27.83
117+15		1.64			3.66			2.15			3.71		
	35		8.39	293.48		1.83	64.05		5.70	199.33		1.86	64.93
117+50		15.13			0.00			9.24			0.00		
	50		13.59	679.50		0.00	0.00		8.11	405.25		0.00	0.00
118+00		12.05			0.00			6.97			0.00		
	50		7.79	389.50		0.00	0.00		6.13	306.50		0.03	1.25
118+50		3.53			0.00			5.29			0.05		
	50		10.00	499.75		0.00	0.00		10.75	537.50		0.04	2.00
119+00		16.46			0.00			16.21			0.03		
	50		13.85	692.50		0.00	0.00		11.61	580.50		0.02	0.75
119+50		11.24			0.00			7.01			0.00		
	50		6.11	305.50		0.05	2.25		5.57	278.25		1.34	67.00
120+00		0.98			0.09			4.12			2.68		
	50		0.49	24.50		3.46	173.00		2.25	112.50		4.92	245.75
120+50		0.00			6.83			0.38			7.15		
	50		0.00	0.00		9.88	494.00		0.40	19.75		7.18	359.00
121+00		0.00			12.93			0.41			7.21		
	50		0.00	0.00		15.16	758.00		0.36	17.75		7.23	361.25
121+50		0.00			17.39			0.30			7.24		
	50		0.00	0.00		25.25	1262.25		0.28	14.00		7.50	375.00
122+00		0.00			33.10			0.26			7.76		
	50		0.00	0.00		34.24	1712.00		0.24	11.75		7.61	380.50
122+50		0.00			35.38			0.21			7.46		
	50		0.00	0.00		30.78	1538.75		0.26	13.00		7.50	375.00
123+00		0.00			26.17			0.31			7.54		
	50		0.00	0.00		24.69	1234.50		0.30	15.00		7.57	378.50

GPI Calculations

Greenman-Pedersen, Inc.

Location Concord

Title Bruce Freeman Rail Trail Phase 2C

Calculated By

Job Number MAX-2010031 (605189)

Checked By

BFRT 2C		EARTH EXCAVATION											
		Cut			Fill			Unsuitable Cut			Unsuitable Cut & Refill		
Station	Length (ft)	P.R. (ft^2)	Av.R. (ft^2)	Vol. (ft^3)	P.R. (ft^2)	Av.R. (ft^2)	Vol. (ft^3)	P.R. (ft^2)	Av.R. (ft^2)	Vol. (ft^3)	P.R. (ft^2)	Av.R. (ft^2)	Vol. (ft^3)
123+50		0.00			23.21			0.29			7.60		
	50		0.51	25.50		11.61	580.25		2.31	115.25		4.53	226.25
124+00		1.02			0.00			4.32			1.45		
	25		1.18	29.38		0.00	0.00		3.61	90.13		0.73	18.13
124+25		1.33			0.00			2.89			0.00		
	25		0.67	16.63		0.00	0.00		1.45	36.13		0.00	0.00
124+50		0.00			0.00			0.00			0.00		
	50		0.00	0.00		0.00	0.00		0.00	0.00		0.00	0.00
125+00		0.00			0.00			0.00			0.00		
	50		0.00	0.00		0.00	0.00		0.00	0.00		0.00	0.00
125+50		0.00			0.00			0.00			0.00		
	50		0.00	0.00		0.00	0.00		0.00	0.00		0.00	0.00
126+00		0.00			0.00			0.00			0.00		
	50		0.00	0.00		0.00	0.00		0.00	0.00		0.00	0.00
126+50		0.00			0.00			0.00			0.00		
	3		0.22	0.66		0.00	0.00		0.12	0.35		0.00	0.00
126+53		0.44			0.00			0.23			0.00		
	47		2.08	97.76		0.00	0.00		1.45	68.15		0.00	0.00
127+00		3.72			0.00			2.67			0.00		
	50		3.28	164.00		0.00	0.00		2.67	133.50		0.00	0.00
127+50		2.84			0.00			2.67			0.00		
	50		2.77	138.50		0.00	0.00		2.67	133.50		0.00	0.00
128+00		2.70			0.00			2.67			0.00		
	50		2.11	105.25		0.00	0.00		2.83	141.25		0.07	3.50
128+50		1.51			0.00			2.98			0.14		
	50		1.17	58.50		0.00	0.00		2.90	145.00		0.08	3.75
129+00		0.83			0.00			2.82			0.01		
	50		6.22	310.75		0.00	0.00		3.29	164.25		0.01	0.25
129+50		11.60			0.00			3.75			0.00		
	50		22.30	1115.00		0.00	0.00		5.01	250.25		0.00	0.00
130+00		33.00			0.00			6.26			0.00		
	50		19.15	957.25		0.00	0.00		5.66	282.75		0.00	0.00
130+50		5.29			0.00			5.05			0.00		
	10		7.96	79.55		0.00	0.00		5.24	52.40		0.00	0.00
130+60		10.62			0.00			5.43			0.00		
	40		5.31	212.40		0.00	0.00		2.72	108.60		0.00	0.00
131+00		0.00			0.00			0.00			0.00		
	18		3.37	60.57		0.03	0.54		2.60	46.71		1.32	23.67
131+18		6.73			0.06			5.19			2.63		
	32		6.06	193.76		2.05	65.60		4.90	156.80		9.02	288.64
131+50		5.38			4.04			4.61			15.41		
	50		14.46	723.00		3.73	186.25		9.14	456.75		11.23	561.25
132+00		23.54			3.41			13.66			7.04		
	50		24.40	1220.00		4.37	218.50		13.06	652.75		7.49	374.25

GPI Calculations

Greenman-Pedersen, Inc.

Location Concord

Title Bruce Freeman Rail Trail Phase 2C

Calculated By

Job Number MAX-2010031 (605189)

Checked By

BFRT 2C		EARTH EXCAVATION											
		Cut			Fill			Unsuitable Cut			Unsuitable Cut & Refill		
Station	Length (ft)	P.R. (ft^2)	Av.R. (ft^2)	Vol. (ft^3)	P.R. (ft^2)	Av.R. (ft^2)	Vol. (ft^3)	P.R. (ft^2)	Av.R. (ft^2)	Vol. (ft^3)	P.R. (ft^2)	Av.R. (ft^2)	Vol. (ft^3)
132+50		25.26			5.33			12.45			7.93		
	50		30.77	1538.50		4.30	214.75		14.89	744.25		5.53	276.50
133+00		36.28			3.26			17.32			3.13		
	50		39.70	1984.75		2.71	135.50		16.89	844.25		3.95	197.25
133+50		43.11			2.16			16.45			4.76		
	50		43.64	2181.75		1.08	54.00		16.83	841.25		3.54	176.75
134+00		44.16			0.00			17.20			2.31		
	50		46.14	2307.00		0.00	0.00		17.50	874.75		1.26	63.00
134+50		48.12			0.00			17.79			0.21		
	50		54.93	2746.25		0.00	0.00		18.24	912.00		0.11	5.25
135+00		61.73			0.00			18.69			0.00		
	50		60.85	3042.50		0.00	0.00		18.32	915.75		0.00	0.00
135+50		59.97			0.00			17.94			0.00		
	50		88.34	4416.75		0.00	0.00		24.48	1224.00		0.00	0.00
136+00		116.70			0.00			31.02			0.00		
	50		126.69	6334.50		0.00	0.00		29.77	1488.50		0.00	0.00
136+50		136.68			0.00			28.52			0.00		
	50		95.90	4794.75		0.13	6.50		25.22	1261.00		0.37	18.25
137+00		55.11			0.26			21.92			0.73		
	50		46.26	2313.00		0.37	18.25		21.23	1061.25		1.60	79.75
137+50		37.41			0.47			20.53			2.46		
	50		57.69	2884.25		3.51	175.50		17.36	867.75		5.94	296.75
138+00		77.96			6.55			14.18			9.41		
	50		54.58	2728.75		3.28	163.75		14.61	730.25		4.72	235.75
138+50		31.19			0.00			15.03			0.02		
	32		30.22	967.04		0.00	0.00		13.68	437.60		0.01	0.32
138+82		29.25			0.00			12.32			0.00		
	18		14.63	263.25		0.00	0.00		6.16	110.88		0.00	0.00
139+00		0.00			0.00			0.00			0.00		
	50		0.00	0.00		0.00	0.00		0.00	0.00		0.00	0.00
139+50		0.00			0.00			0.00			0.00		
	10		7.39	73.90		0.02	0.15		5.96	59.60		0.22	2.15
139+60		14.78			0.03			11.92			0.43		
	40		8.40	335.80		0.24	9.60		10.94	437.40		2.17	86.60
140+00		2.01			0.45			9.95			3.90		
	50		1.86	92.75		0.23	11.25		7.97	398.25		2.41	120.50
140+50		1.70			0.00			5.98			0.92		
	50		4.35	217.25		0.00	0.00		6.15	307.50		0.46	23.00
141+00		6.99			0.00			6.32			0.00		
	50		3.98	199.00		0.00	0.00		6.06	302.75		0.43	21.25
141+50		0.97			0.00			5.79			0.85		
	50		4.58	229.00		0.00	0.00		5.72	285.75		0.43	21.25
142+00		8.19			0.00			5.64			0.00		
	50		5.52	276.00		0.00	0.00		5.59	279.50		0.04	1.75

GPI Calculations

Greenman-Pedersen, Inc.

Location Concord

Title Bruce Freeman Rail Trail Phase 2C

Calculated By

Job Number MAX-2010031 (605189)

Checked By

BFRT 2C		EARTH EXCAVATION											
		Cut			Fill			Unsuitable Cut			Unsuitable Cut & Refill		
Station	Length (ft)	P.R. (ft^2)	Av.R. (ft^2)	Vol. (ft^3)	P.R. (ft^2)	Av.R. (ft^2)	Vol. (ft^3)	P.R. (ft^2)	Av.R. (ft^2)	Vol. (ft^3)	P.R. (ft^2)	Av.R. (ft^2)	Vol. (ft^3)
142+50		2.85			0.00			5.54			0.07		
	50		5.45	272.50		0.00	0.00		5.87	293.50		0.04	1.75
143+00		8.05			0.00			6.20			0.00		
	50		4.29	214.50		0.00	0.00		5.77	288.50		0.26	13.00
143+50		0.53			0.00			5.34			0.52		
	50		1.75	87.50		0.00	0.00		5.24	262.00		0.27	13.50
144+00		2.97			0.00			5.14			0.02		
	15		1.99	29.78		0.00	0.00		5.49	82.28		0.06	0.90
144+15		1.00			0.00			5.83			0.10		
	35		1.48	51.80		0.00	0.00		5.16	180.60		0.31	10.68
144+50		1.96			0.00			4.49			0.51		
	50		1.36	67.75		0.00	0.00		4.98	249.00		0.38	19.00
145+00		0.75			0.00			5.47			0.25		
	50		1.30	65.00		0.00	0.00		5.52	275.75		0.25	12.25
145+50		1.85			0.00			5.56			0.24		
	50		1.40	69.75		0.00	0.00		5.45	272.25		0.54	26.75
146+00		0.94			0.00			5.33			0.83		
	50		0.99	49.25		0.00	0.00		5.27	263.50		0.71	35.50
146+50		1.03			0.00			5.21			0.59		
	50		2.50	124.75		0.00	0.00		5.57	278.50		0.33	16.25
147+00		3.96			0.00			5.93			0.06		
	50		5.08	254.00		0.00	0.00		6.63	331.50		0.03	1.50
147+50		6.20			0.00			7.33			0.00		
	50		7.64	382.00		0.00	0.00		6.83	341.50		0.00	0.00
148+00		9.08			0.00			6.33			0.00		
	50		9.79	489.50		0.00	0.00		6.66	332.75		0.00	0.00
148+50		10.50			0.00			6.98			0.00		
	50		10.45	522.50		0.00	0.00		6.97	348.25		0.00	0.00
149+00		10.40			0.00			6.95			0.00		
	50		9.33	466.25		0.00	0.00		6.30	314.75		0.02	1.00
149+50		8.25			0.00			5.64			0.04		
	50		7.74	386.75		0.00	0.00		6.07	303.50		0.03	1.25
150+00		7.22			0.00			6.50			0.01		
	50		4.06	202.75		0.00	0.00		5.93	296.50		0.23	11.50
150+50		0.89			0.00			5.36			0.45		
	50		1.16	58.00		0.11	5.25		5.16	257.75		0.68	34.00
151+00		1.43			0.21			4.95			0.91		
	50		2.52	126.00		0.11	5.25		5.28	264.00		1.31	65.25
151+50		3.61			0.00			5.61			1.70		
	50		1.99	99.25		0.35	17.25		3.82	191.00		2.88	143.75
152+00		0.36			0.69			2.03			4.05		
	50		3.57	178.50		0.35	17.50		4.02	201.00		2.67	133.25
152+50		6.78			0.01			6.01			1.28		
	50		7.38	369.00		0.01	0.25		6.21	310.50		0.95	47.50

GPI Calculations

Greenman-Pedersen, Inc.

Location Concord

Title Bruce Freeman Rail Trail Phase 2C

Calculated By

Job Number MAX-2010031 (605189)

Checked By

BFRT 2C		EARTH EXCAVATION											
		Cut			Fill			Unsuitable Cut			Unsuitable Cut & Refill		
Station	Length (ft)	P.R. (ft^2)	Av.R. (ft^2)	Vol. (ft^3)	P.R. (ft^2)	Av.R. (ft^2)	Vol. (ft^3)	P.R. (ft^2)	Av.R. (ft^2)	Vol. (ft^3)	P.R. (ft^2)	Av.R. (ft^2)	Vol. (ft^3)
153+00		7.98			0.00			6.41			0.62		
	50		6.53	326.50		0.00	0.00		6.05	302.25		1.07	53.25
153+50		5.08			0.00			5.68			1.51		
	50		4.27	213.50		0.03	1.25		5.01	250.25		1.58	79.00
154+00		3.46			0.05			4.33			1.65		
	50		4.54	226.75		0.08	3.75		4.67	233.25		1.83	91.50
154+50		5.61			0.10			5.00			2.01		
	50		5.28	264.00		0.24	12.00		5.04	251.75		2.06	103.00
155+00		4.95			0.38			5.07			2.11		
	50		5.27	263.25		0.29	14.50		4.87	243.25		2.13	106.25
155+50		5.58			0.20			4.66			2.14		
	50		6.25	312.50		0.10	5.00		5.48	274.00		1.07	53.50
156+00		6.92			0.00			6.30			0.00		
	50		5.10	254.75		0.02	1.00		5.83	291.25		0.68	33.75
156+50		3.27			0.04			5.35			1.35		
	50		2.94	147.00		0.08	4.00		5.00	249.75		1.76	88.00
157+00		2.61			0.12			4.64			2.17		
	50		5.65	282.50		7.78	389.00		6.45	322.25		4.67	233.50
157+50		8.69			15.44			8.25			7.17		
	50		7.27	363.25		12.28	614.00		7.86	393.00		7.33	366.50
158+00		5.84			9.12			7.47			7.49		
	50		7.19	359.50		7.35	367.50		7.06	352.75		8.35	417.25
158+50		8.54			5.58			6.64			9.20		
	50		12.47	623.25		3.35	167.50		8.41	420.50		6.94	346.75
159+00		16.39			1.12			10.18			4.67		
	50		18.29	914.25		0.56	28.00		10.81	540.50		2.34	116.75
159+50		20.18			0.00			11.44			0.00		
	28		18.54	518.98		0.00	0.00		10.07	281.96		0.29	7.98
159+78		16.89			0.00			8.70			0.57		
	22		18.12	398.64		0.00	0.00		8.57	188.43		0.29	6.27
160+00		19.35			0.00			8.43			0.00		
	3		19.28	57.84		0.00	0.00		8.33	24.99		0.00	0.00
160+03		19.21			0.00			8.23			0.00		
	47		9.89	464.60		0.11	4.94		5.87	275.66		1.13	53.11
160+50		0.56			0.21			3.50			2.26		
	50		13.21	660.25		2.73	136.50		5.32	266.00		4.01	200.25
161+00		25.85			5.25			7.14			5.75		
	50		68.06	3403.00		2.63	131.25		17.51	875.25		3.15	157.25
161+50		110.27			0.00			27.87			0.54		
	50		88.66	4433.00		3.83	191.50		27.62	1381.00		2.22	110.75
162+00		67.05			7.66			27.37			3.89		
	50		80.59	4029.25		4.87	243.50		28.21	1410.50		3.01	150.25
162+50		94.12			2.08			29.05			2.12		
	50		125.79	6289.50		1.04	52.00		26.87	1343.25		1.08	54.00

GPI Calculations

Greenman-Pedersen, Inc.

Location Concord

Title Bruce Freeman Rail Trail Phase 2C

Calculated By

Job Number MAX-2010031 (605189)

Checked By

BFRT 2C		EARTH EXCAVATION											
		Cut			Fill			Unsuitable Cut			Unsuitable Cut & Refill		
Station	Length (ft)	P.R. (ft^2)	Av.R. (ft^2)	Vol. (ft^3)	P.R. (ft^2)	Av.R. (ft^2)	Vol. (ft^3)	P.R. (ft^2)	Av.R. (ft^2)	Vol. (ft^3)	P.R. (ft^2)	Av.R. (ft^2)	Vol. (ft^3)
163+00		157.46			0.00			24.68			0.04		
	20		126.28	2525.60		0.00	0.00		19.58	391.60		0.02	0.40
163+20		95.10			0.00			14.48			0.00		
	30		49.66	1489.65		0.00	0.00		9.90	297.00		0.00	0.00
163+50		4.21			0.00			5.32			0.00		

	TOTAL		TOTAL	
Cut	152,529	ft^3	**5,649**	**CY**
Fill	64,161	ft^3	**2,376**	**CY**
Unsuitable Cut Material	80,530	ft^3	**2,983**	**CY**
Unsuitable Cut & Refill Material	40,653	ft^3	**1,506**	**CY**

(Unsuitable Material has been calculated by assuming that the top 4 inches of the existing ground is material that cannot be used as fill.)

GPI Calculations

Greenman-Pedersen, Inc.

Location Concord

Title Bruce Freeman Rail Trail Phase 2C

Calculated By

Job Number MAX-2010031 (605189)

Checked By

POWDER MILL ROAD ACCESS — **EARTH EXCAVATION**

Station	Length (ft)	Cut P.R. (ft^2)	Cut Av.R. (ft^2)	Cut Vol. (ft^3)	Fill P.R. (ft^2)	Fill Av.R. (ft^2)	Fill Vol. (ft^3)	Unsuitable Cut P.R. (ft^2)	Unsuitable Cut Av.R. (ft^2)	Unsuitable Cut Vol. (ft^3)	Unsuitable Cut & Refill P.R. (ft^2)	Unsuitable Cut & Refill Av.R. (ft^2)	Unsuitable Cut & Refill Vol. (ft^3)
300+00		4.03			0.00			4.19			0.00		
	50		18.76	938.00		0.00	0.00		5.77	288.50		0.00	0.00
300+50		33.49			0.00			7.35			0.00		
	50		16.84	841.75		5.88	294.00		4.09	204.25		3.05	152.50
301+00		0.18			11.76			0.82			6.10		
	50		27.73	1386.25		5.88	294.00		4.39	219.50		3.05	152.50
301+50		55.27			0.00			7.96			0.00		
	50		27.64	1381.75		35.72	1786.00		4.12	206.00		5.05	252.25
302+00		0.00			71.44			0.28			10.09		
	50		0.06	2.75		60.59	3029.25		0.36	17.75		9.24	462.00
302+50		0.11			49.73			0.43			8.39		
	50		4.92	246.00		24.87	1243.25		2.62	130.75		4.20	209.75
303+00		9.73			0.00			4.80			0.00		
	50		4.87	243.25		20.50	1024.75		2.65	132.25		5.08	253.75
303+50		0.00			40.99			0.49			10.15		
	50		0.00	0.00		45.64	2281.75		0.46	22.75		9.25	462.25
304+00		0.00			50.28			0.42			8.34		
	50		12.83	641.25		25.77	1288.50		2.80	140.00		5.35	267.50
304+50		25.65			1.26			5.18			2.36		
	50		12.83	641.25		6.68	334.00		2.74	136.75		3.99	199.50
305+00		0.00			12.10			0.29			5.62		
	50		0.24	12.00		6.05	302.50		1.39	69.25		3.44	172.00
305+50		0.48			0.00			2.48			1.26		
		55.27			TOTAL								

Cut	6,334 ft^3	**235**	**CY**
Fill	11,878 ft^3	**440**	**CY**
Unsuitable Cut Material	1,568 ft^3	**58**	**CY**
Unsuitable Cut & Refill Material	2,584 ft^3	**96**	**CY**

(Unsuitable Material has been calculated by assuming that the top 4 inches of the existing ground is material that cannot be used as fill.)

GPI Calculations

Greenman-Pedersen, Inc.

Location Concord **Job Number** MAX-2010031 (605189)
Title Bruce Freeman Rail Trail Phase 2C
Calculated By **Checked By**

POWDER MILL ROAD			EARTH EXCAVATION					
			Cut			Fill		
Station		Length (ft)	P.R. (ft^2)	Av.R. (ft^2)	Vol. (ft^3)	P.R. (ft^2)	Av.R. (ft^2)	Vol. (ft^3)
203	50		22.19			5.58		
		50		25.87	1293.25		25.15	1257.25
204	00		29.54			44.71		
		50		20.11	1005.50		214.43	10721.50
204	50		10.68			384.15		
		50		12.24	611.75		281.12	14056.00
205	00		13.79			178.09		
		50		15.20	760.00		99.31	4965.50
205	50		16.61			20.53		
		50		20.00	999.75		10.27	513.25
206	00		23.38			0.00		
		50		23.97	1198.50		0.00	0.00
206	50		24.56			0.00		

	TOTAL		**TOTAL**	
Cut	5,869	ft^3	**217**	**CY**
Fill	31,514	ft^3	**1,167**	**CY**

GPI Calculations **Greenman-Pedersen, Inc.**

Location Concord **Job Number** MAX-2010031 (605189)
Title Bruce Freeman Rail Trail Phase 2C
Calculated By _____ **Checked By** _____

EARTH SUMMARY

FROM EARTHWORKS SHEETS:

EXCAVATION	CY	EMBANKMENT	CY
Total (BFRT 2C)	10,137		3,882
Total (Powder Mill Access)	388		536
Total (Powder Mill Road)	217		1,167
	10,526		4,418

EXCAVATION	CY	EMBANKMENT	CY
Earthworks	10,526	Earthworks	4,418
Estimated Excavation	10,526	Estimated Embankment	4,418
Deduct 2.5% (Boulders):	-263.1		
Deduct (Unsuitable):	-4,642		
Deduct 5% (Shrinkage):	-526.3	Plus 15% (Swell):	662.6
Avaliable for Embankment:	**5,094 CY**	**Total Embankment Required:**	**5,080 CY**
		SURPLUS	**-14 CY**

MASSACHUSETTS DEPARTMENT OF TRANSPORTATION **TRAFFIC ENGINEERING SEC.**

INSTALLATION OF TRAFFIC SIGNALS OR FLASHING BEACONS

COST ESTIMATE

CITY /TOWN **Concord** Item 816.01.- Traffic Signal Reconstruction Location #1

TYPE OF INSTALLATION Location: Main St @ Commonwealth Ave

Quantity	Unit	Item	Unit Cost	Total Cost
		POSTS		
1	ea.	Standard Type 10 Ft. (3.0-m)	$1,000	$1,000
	ea.	Standard Type 8 Ft. (2.5-m)	$900	$0
	ea.	Mast Arm 40 Ft (12.2m) Type	$6,000	$0
	ea.	Mast Arm 35 Ft (10.5m) Type	$5,500	$0
	ea.	Mast Arm 30 Ft (9.1m) Type	$5,000	$0
2	ea.	Mast Arm 25 Ft Type	$4,500	$9,000
1	ea.	Mast Arm 15 Ft Type	$3,500	$3,500
	ls	Span Wire Assembly & Strain Poles	$15,000	$0
		CONTROLLERS		
1	ea.	Controller & Cabinet NEMA TS2, Type 1	$18,000	$18,000
	ea.	Circuit Flasher Mech.	$500	$0
		DETECTORS		
	ea.	Multi-Video Camera (5) w/Video Det. Processor	$40,000	$0
	ea.	Amplifier - 2 Channel (Rack Mount)	$800	$0
8	ea.	Vehicle Loop Detector (6'x20' Quadrupole Type)	$1,200	$9,600
3	ea.	Bicycle Loop Detector Type D2	$800	$2,400
1	ea.	Preemption Confirmation Strobe	$500	$500
3	ea.	Preemption Optical Receiver (Detector)	$1,000	$3,000
2	ea.	Preemption Phase Selector 2-Channels	$3,500	$7,000
3	ea.	Pedestrian Push Button, Sign & Saddle	$1,500	$4,500
		MISC. EQUIPMENT		
	ls	Video Surveillance Camera		
		HOUSINGS		$0
	ea.	1-Way 1 lens 8" (Red LED)	$300	$0
7	ea.	1-Way 3 lens 12" (All LED)	$1,200	$8,400
	ea.	1-Way 3 lens 12" Optically Programmed	$800	$0
	ea.	1-Way 4 lens 12" with Dual Arrow	$2,000	$0
		Displays (All LED)		
	ea.	1-Way 4 lens 12" w/Green Left Arrow (All LED)	$1,600	$0
2	ea.	1-Way 5 lens 12" (All LED)	$2,000	$4,000
4	ea.	Pedestrian Graphic LED	$1,500	$6,000

Quantity	Unit	Item	Unit Cost	Total Cost
		PULL BOXES (see items 811.30 & 811.31)		
	ea.	8" X 23"		
	ea.	12" X 12"	$700	$0
		CONDUIT (see item 804.3)		
		3" Type		
		FOUNDATIONS		
1	ea.	Signal Post	$500	$500
3	ea.	Mast Arm	$5,000	$15,000
	ea.	"P" Box (Controller Cabinet)	$500	$0
	ea.	Strain Pole	$5,000	
		SERVICE CONNECTION		
1	ls	Equipment & Cable	$2,000	$2,000
1	ls	Utility Co. Charges	$1,000	$1,000
		(Electric & Telephone)		
		CABLE		
	ls	15/c No. 12 AWG	$2,000	$0
290	lf	Loop Lead-in	$2.00	$580
		/c No. 12 AWG		
		/c No. 8 AWG Bare Str.		
		MISC. LABOR		

Materials	$95,980
Equipment	$9,598
Labor	$14,397
OFFICE ESTIMATE	$119,975

Date: June-15 Estimated By: CTW

Checked By:

Approved

Traffic Engineer

CONCORD
BRUCE FREEMAN RAIL TRAIL PHASE 2C

STATE	FED. AID PROJ. NO.	SHEET NO.	TOTAL SHEETS
MA	----	1	48
PROJECT FILE NO.	605189		

SURFACE AREAS

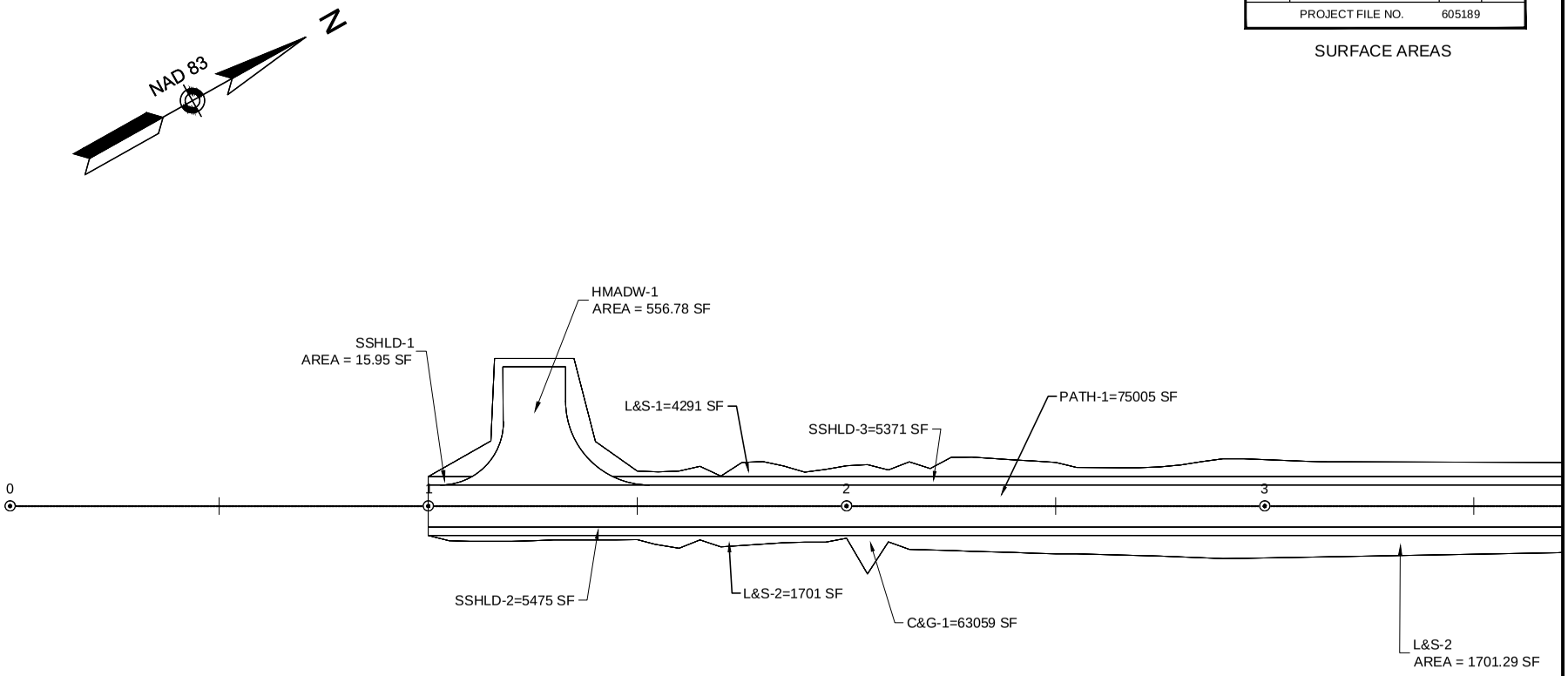

CONCORD
BRUCE FREEMAN RAIL TRAIL PHASE 2C

STATE	FED. AID PROJ. NO.	SHEET NO.	TOTAL SHEETS
MA	----	2	48
PROJECT FILE NO.	605189		

SURFACE AREAS

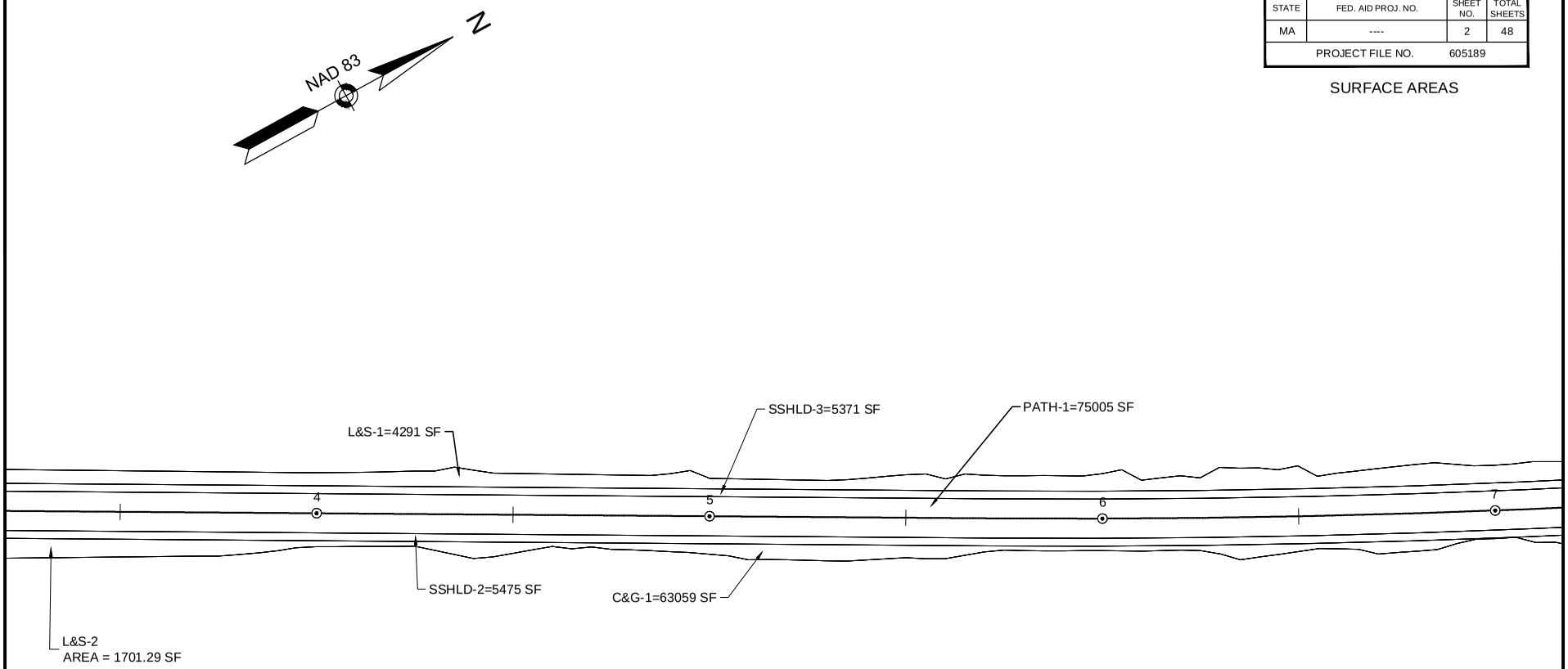

CONCORD
BRUCE FREEMAN RAIL TRAIL PHASE 2C

STATE	FED. AID PROJ. NO.	SHEET NO.	TOTAL SHEETS
MA	----	3	48
PROJECT FILE NO.	605189		

SURFACE AREAS

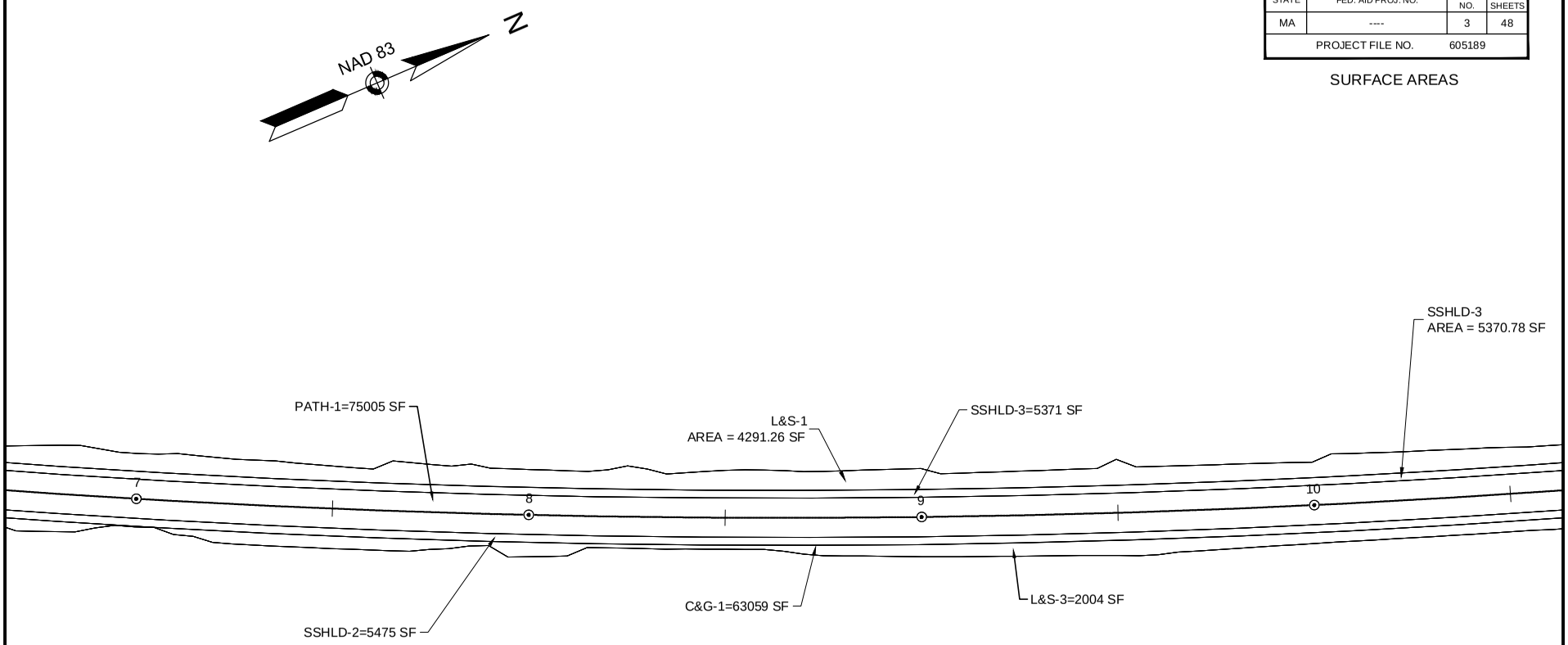

CONCORD
BRUCE FREEMAN RAIL TRAIL PHASE 2C

STATE	FED. AID PROJ. NO.	SHEET NO.	TOTAL SHEETS
MA	----	4	48
PROJECT FILE NO.	605189		

SURFACE AREAS

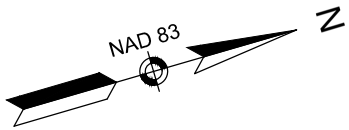

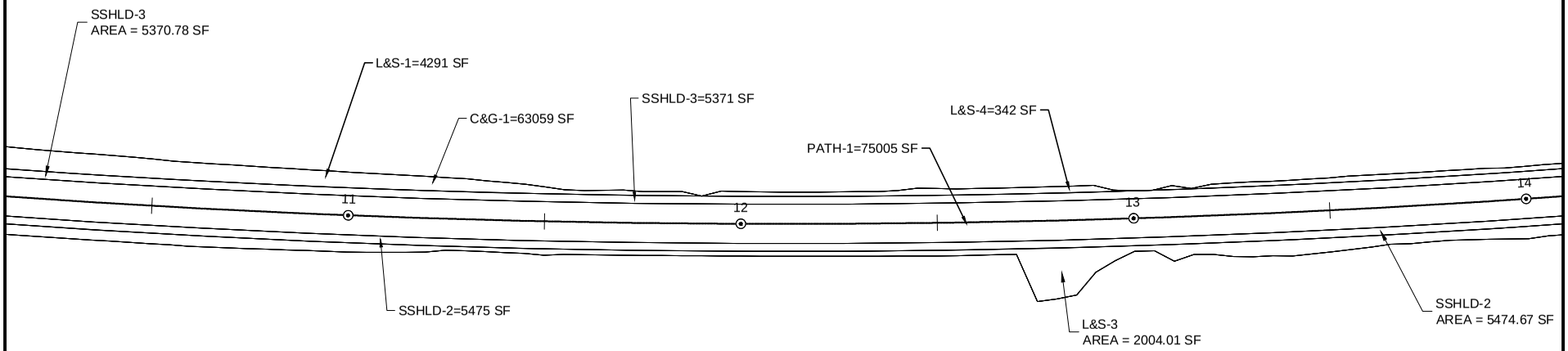

CONCORD
BRUCE FREEMAN RAIL TRAIL PHASE 2C

STATE	FED. AID PROJ. NO.	SHEET NO.	TOTAL SHEETS
MA	----	5	48
PROJECT FILE NO.	605189		

SURFACE AREAS

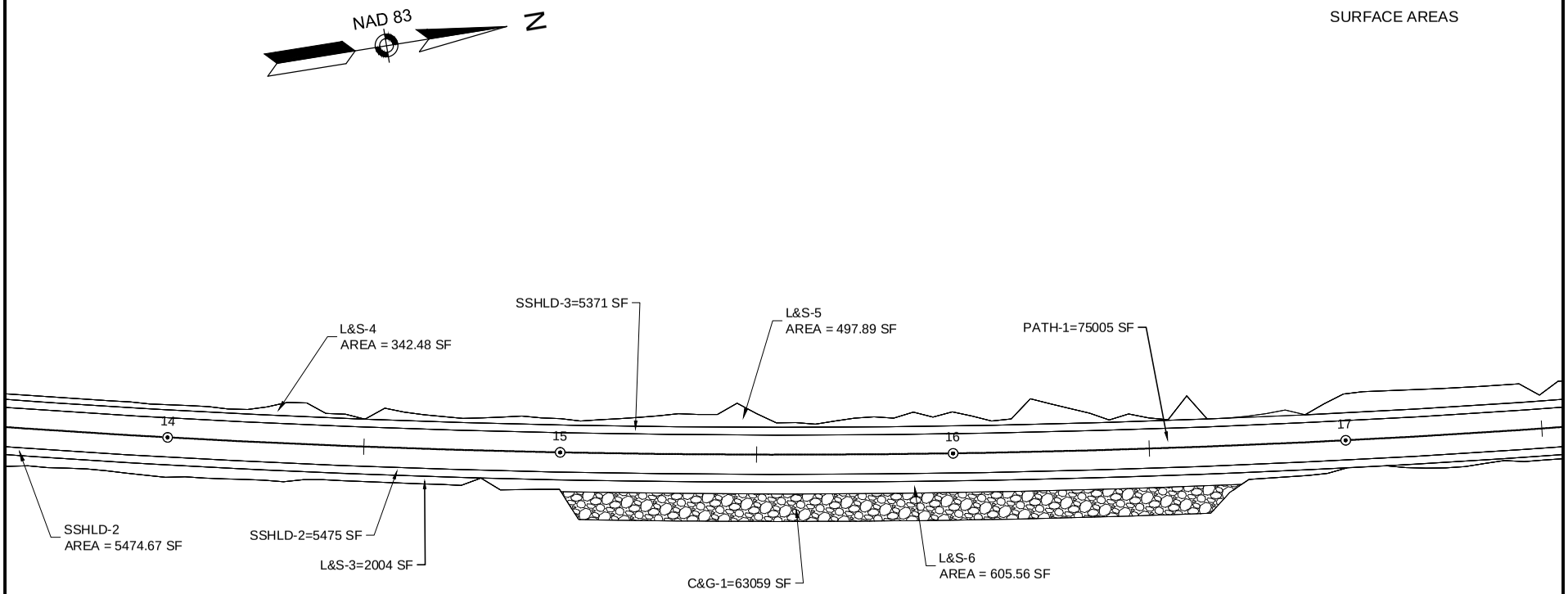

CONCORD
BRUCE FREEMAN RAIL TRAIL PHASE 2C

STATE	FED. AID PROJ. NO.	SHEET NO.	TOTAL SHEETS
MA	----	6	48
PROJECT FILE NO.	605189		

SURFACE AREAS

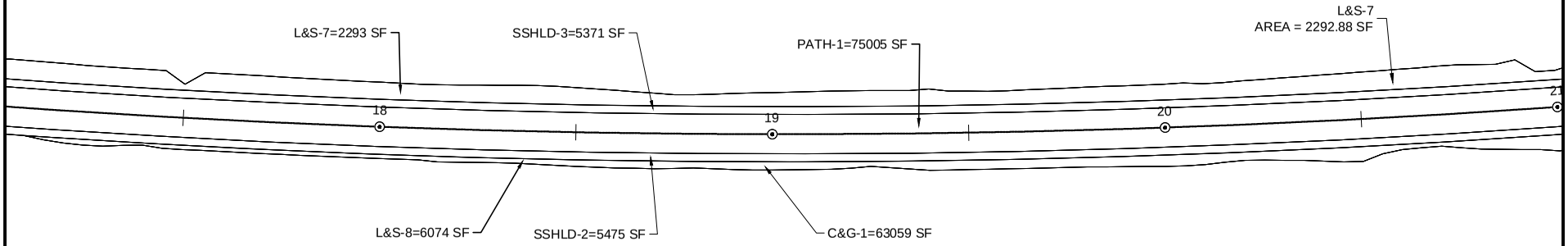

CONCORD
BRUCE FREEMAN RAIL TRAIL PHASE 2C

STATE	FED. AID PROJ. NO.	SHEET NO.	TOTAL SHEETS
MA	----	7	48
PROJECT FILE NO.	605189		

SURFACE AREAS

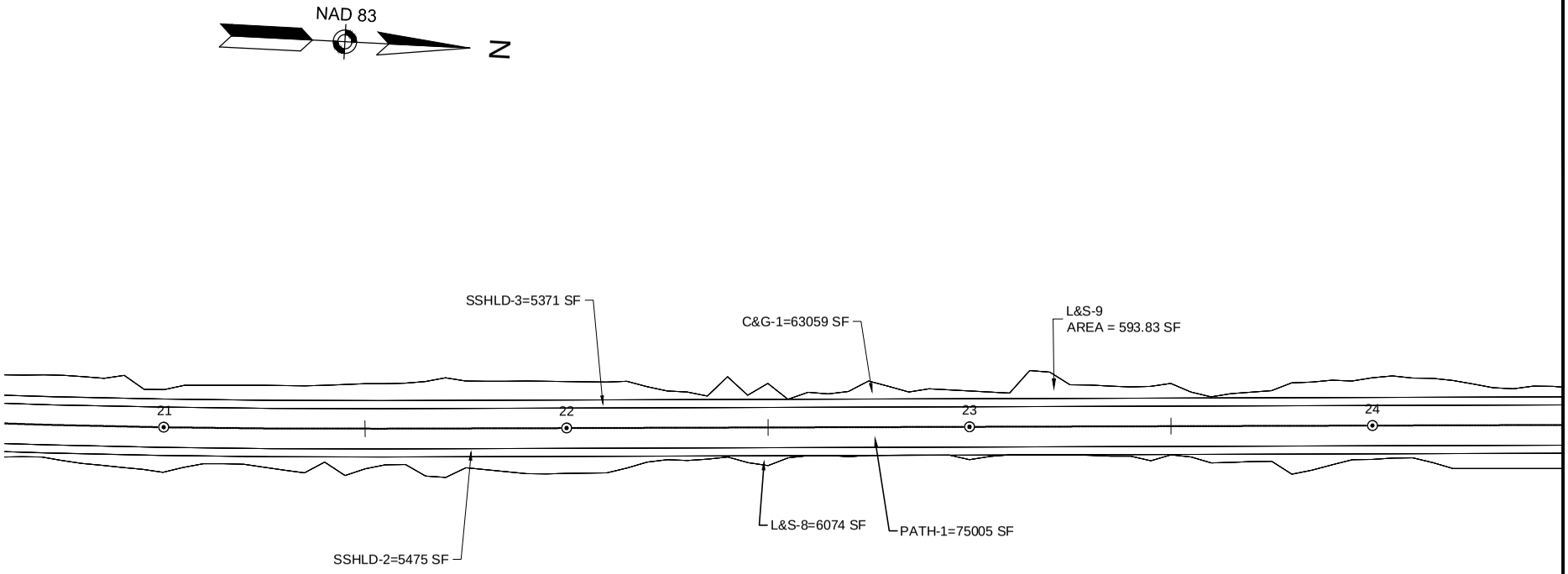

CONCORD
BRUCE FREEMAN RAIL TRAIL PHASE 2C

STATE	FED. AID PROJ. NO.	SHEET NO.	TOTAL SHEETS
MA	----	8	48
PROJECT FILE NO.	605189		

SURFACE AREAS

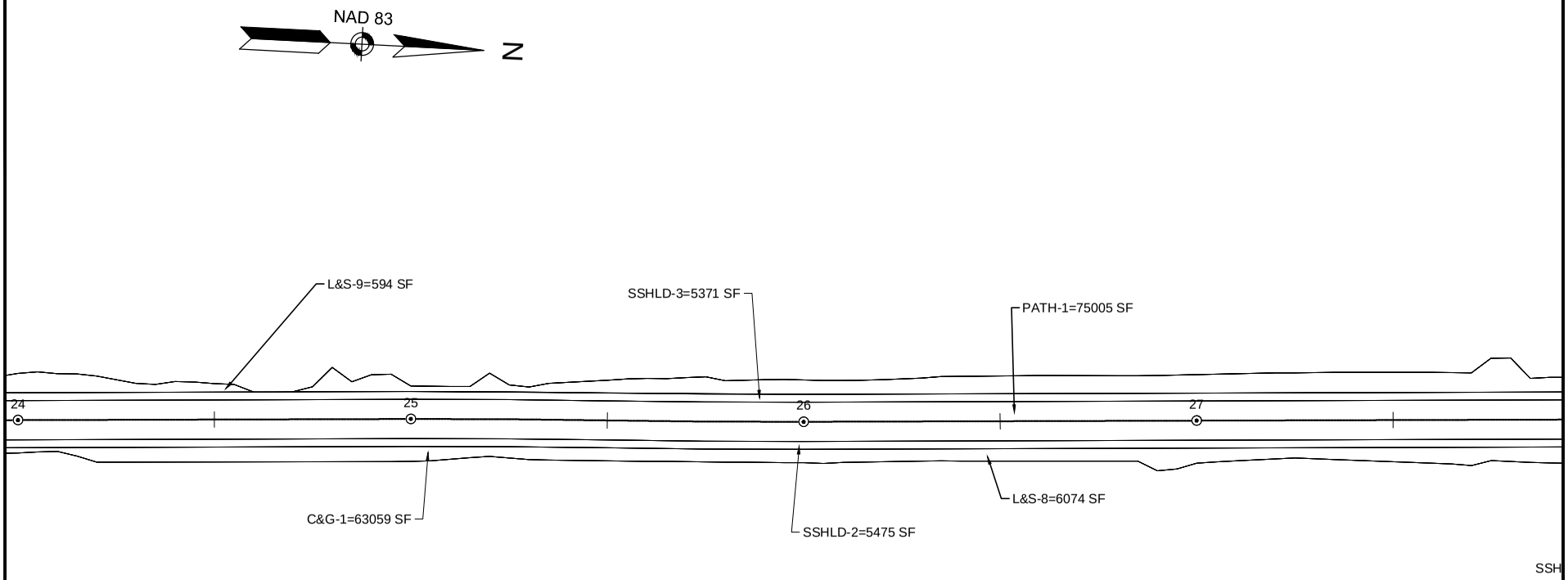

CONCORD
BRUCE FREEMAN RAIL TRAIL PHASE 2C

STATE	FED. AID PROJ. NO.	SHEET NO.	TOTAL SHEETS
MA	----	9	48
PROJECT FILE NO.	605189		

SURFACE AREAS

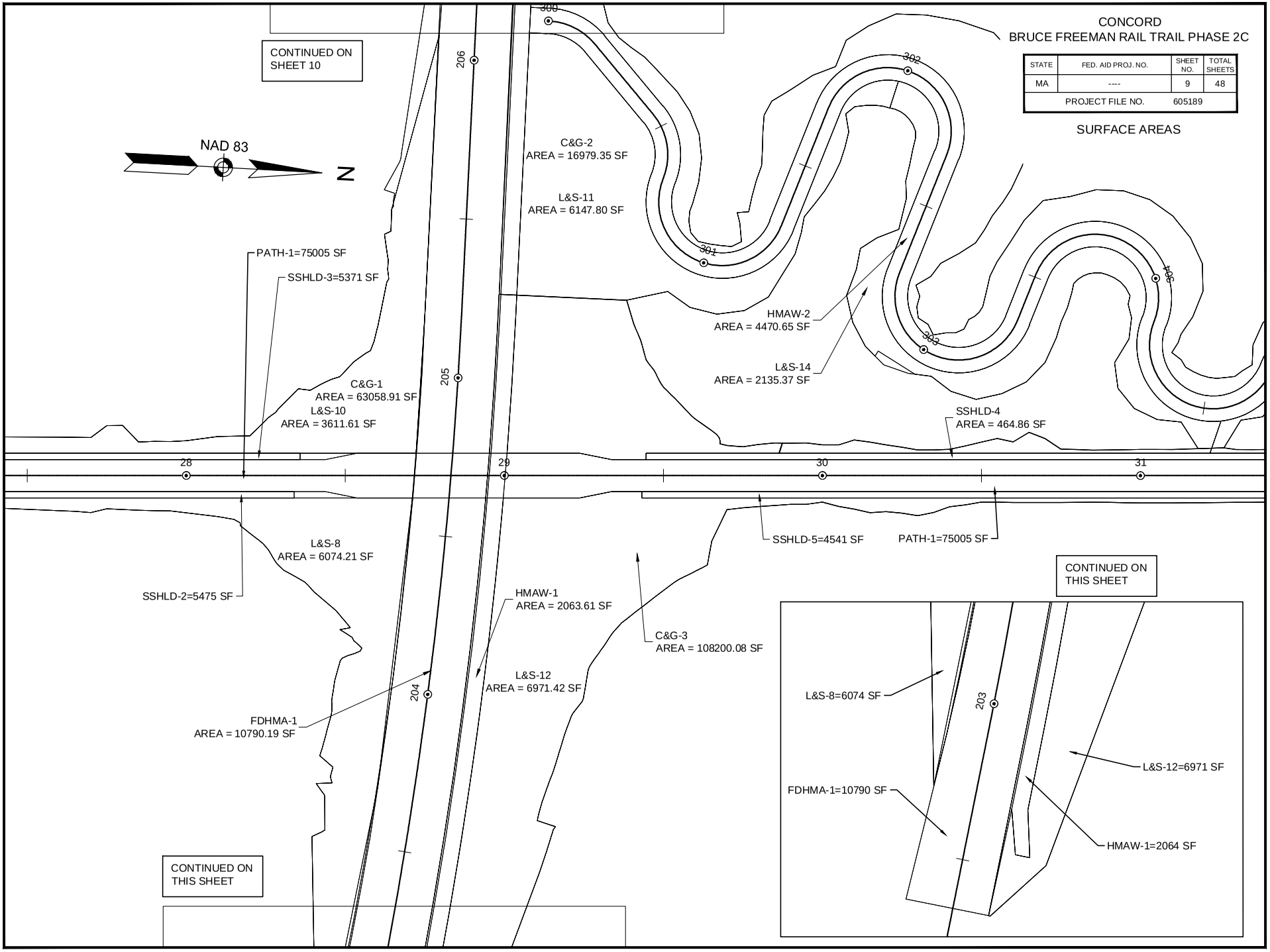

CONCORD
BRUCE FREEMAN RAIL TRAIL PHASE 2C

STATE	FED. AID PROJ. NO.	SHEET NO.	TOTAL SHEETS
MA	----	10	48
PROJECT FILE NO.	605189		

SURFACE AREAS

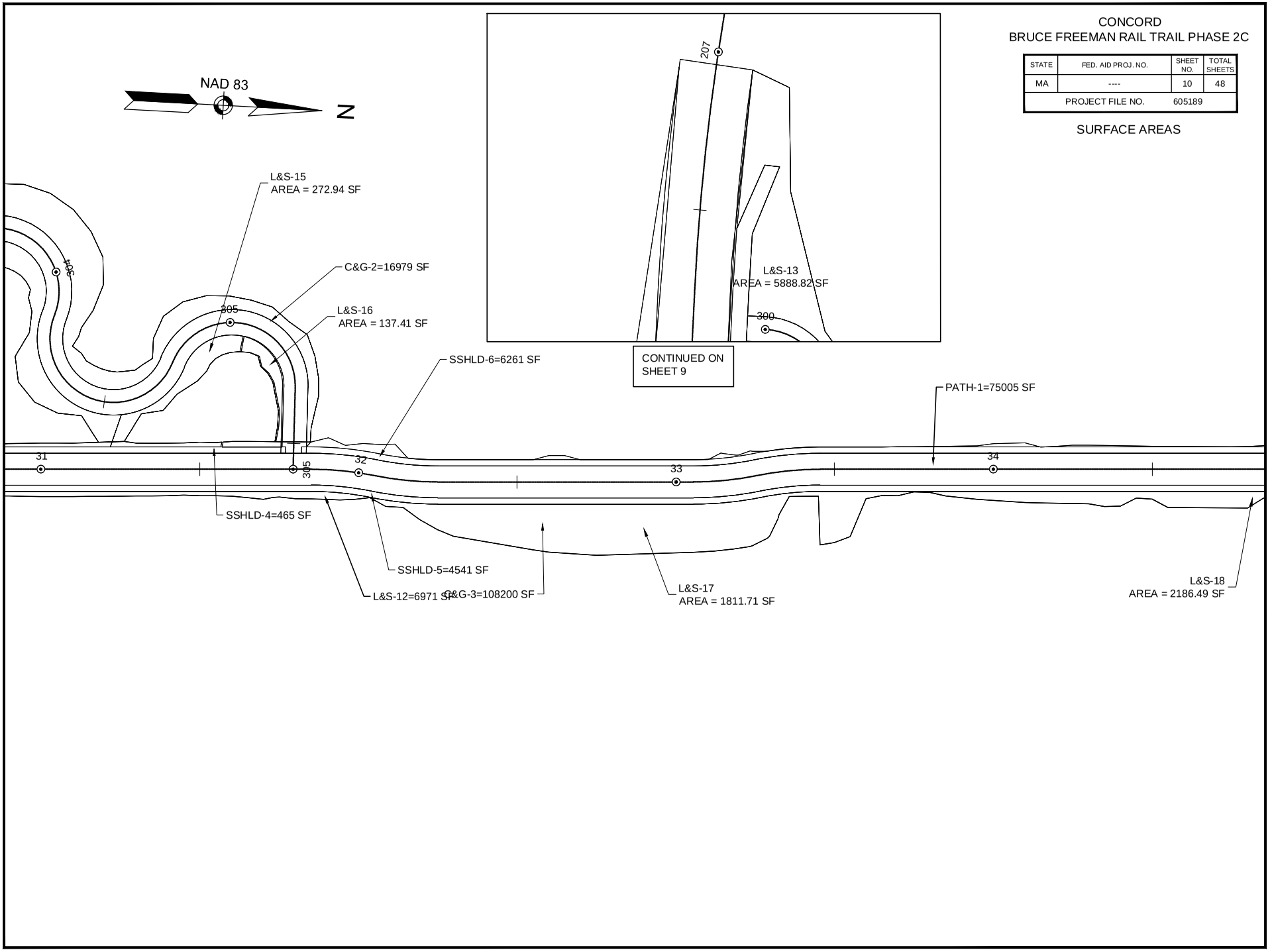

CONCORD
BRUCE FREEMAN RAIL TRAIL PHASE 2C

STATE	FED. AID PROJ. NO.	SHEET NO.	TOTAL SHEETS
MA	----	11	48
PROJECT FILE NO.	605189		

SURFACE AREAS

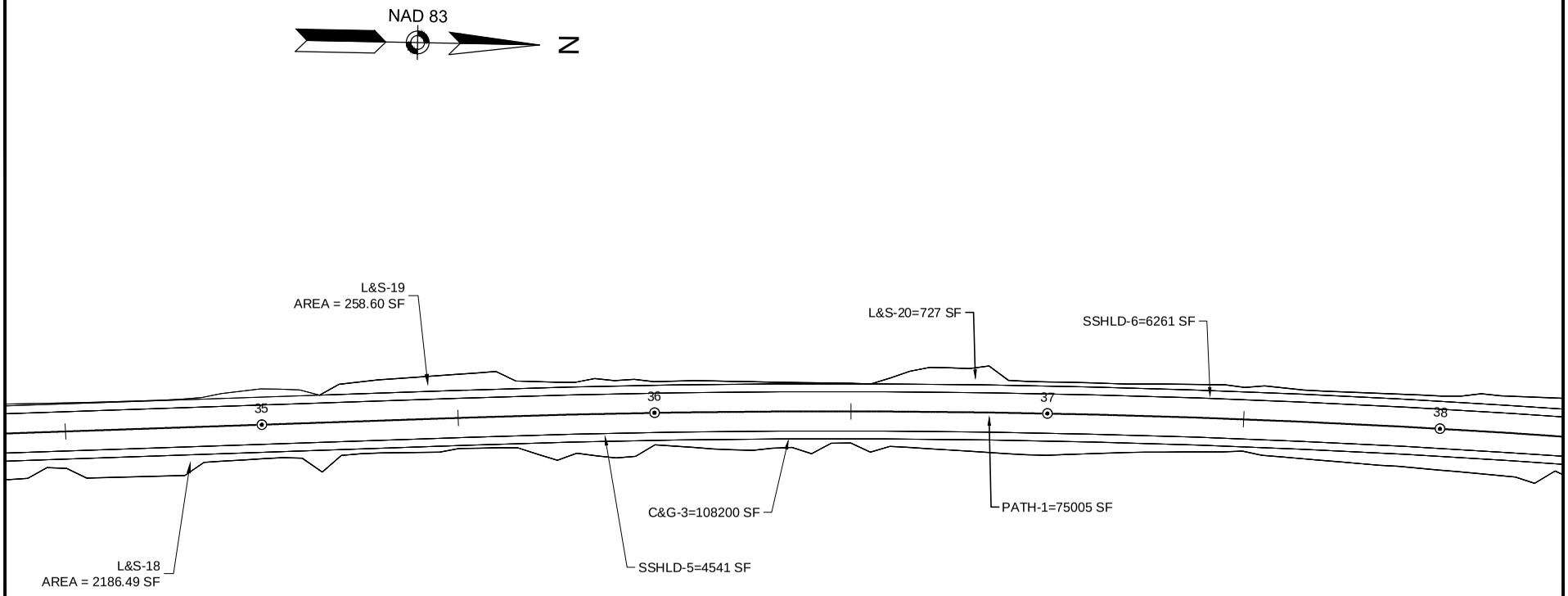

CONCORD
BRUCE FREEMAN RAIL TRAIL PHASE 2C

STATE	FED. AID PROJ. NO.	SHEET NO.	TOTAL SHEETS
MA	----	12	48
PROJECT FILE NO.	605189		

SURFACE AREAS

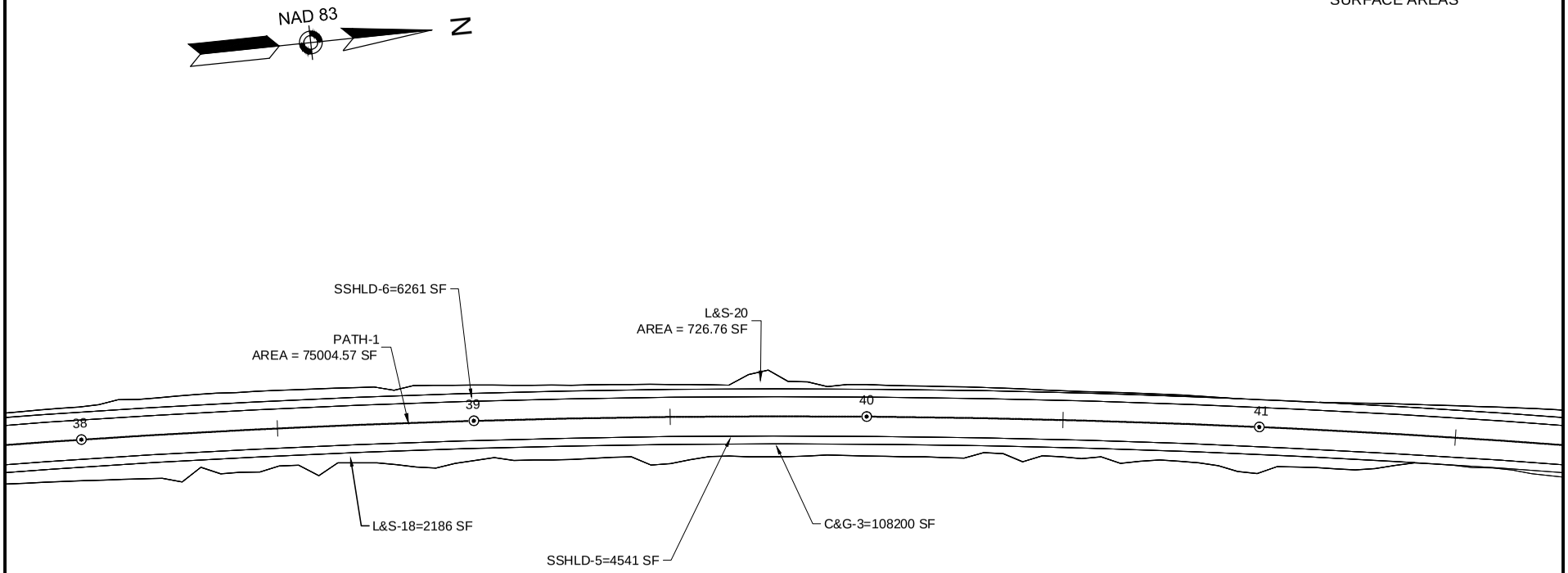

CONCORD
BRUCE FREEMAN RAIL TRAIL PHASE 2C

STATE	FED. AID PROJ. NO.	SHEET NO.	TOTAL SHEETS
MA	----	13	48
PROJECT FILE NO.	605189		

SURFACE AREAS

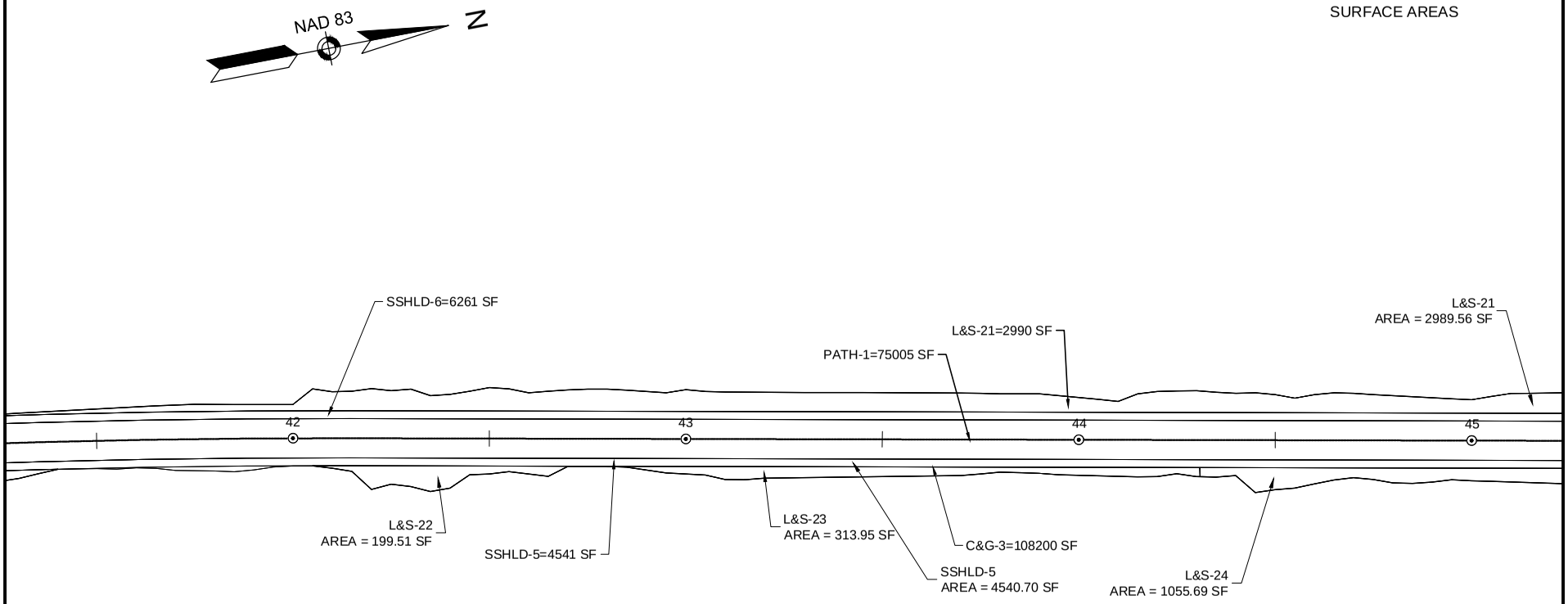

CONCORD
BRUCE FREEMAN RAIL TRAIL PHASE 2C

STATE	FED. AID PROJ. NO.	SHEET NO.	TOTAL SHEETS
MA	----	14	48
PROJECT FILE NO.	605189		

SURFACE AREAS

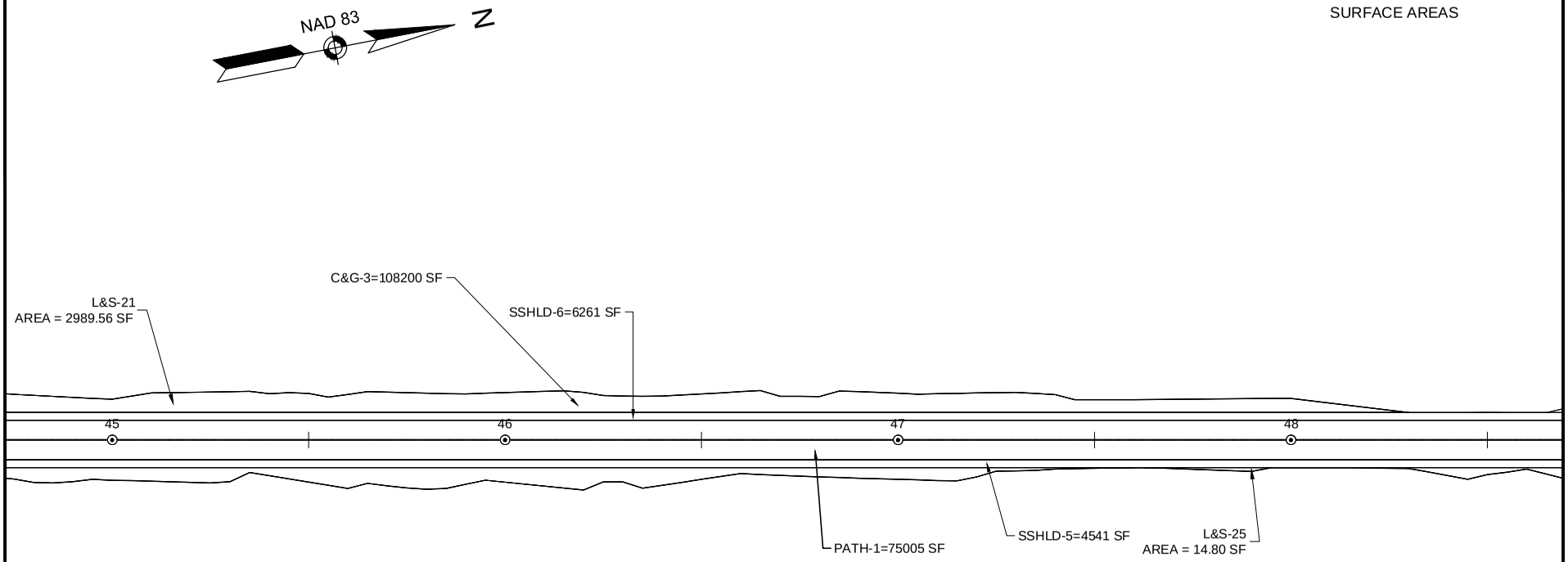

CONCORD
BRUCE FREEMAN RAIL TRAIL PHASE 2C

STATE	FED. AID PROJ. NO.	SHEET NO.	TOTAL SHEETS
MA	----	15	48
PROJECT FILE NO.	605189		

SURFACE AREAS

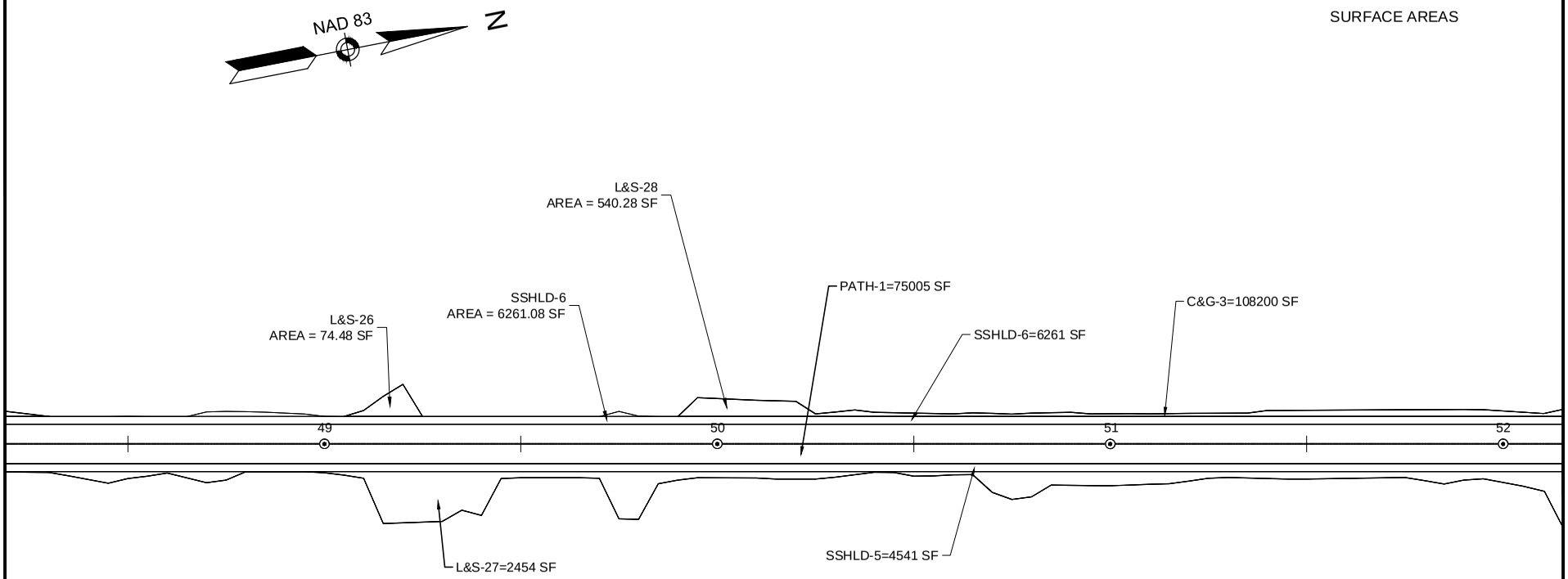

CONCORD
BRUCE FREEMAN RAIL TRAIL PHASE 2C

STATE	FED. AID PROJ. NO.	SHEET NO.	TOTAL SHEETS
MA	----	16	48
PROJECT FILE NO.	605189		

SURFACE AREAS

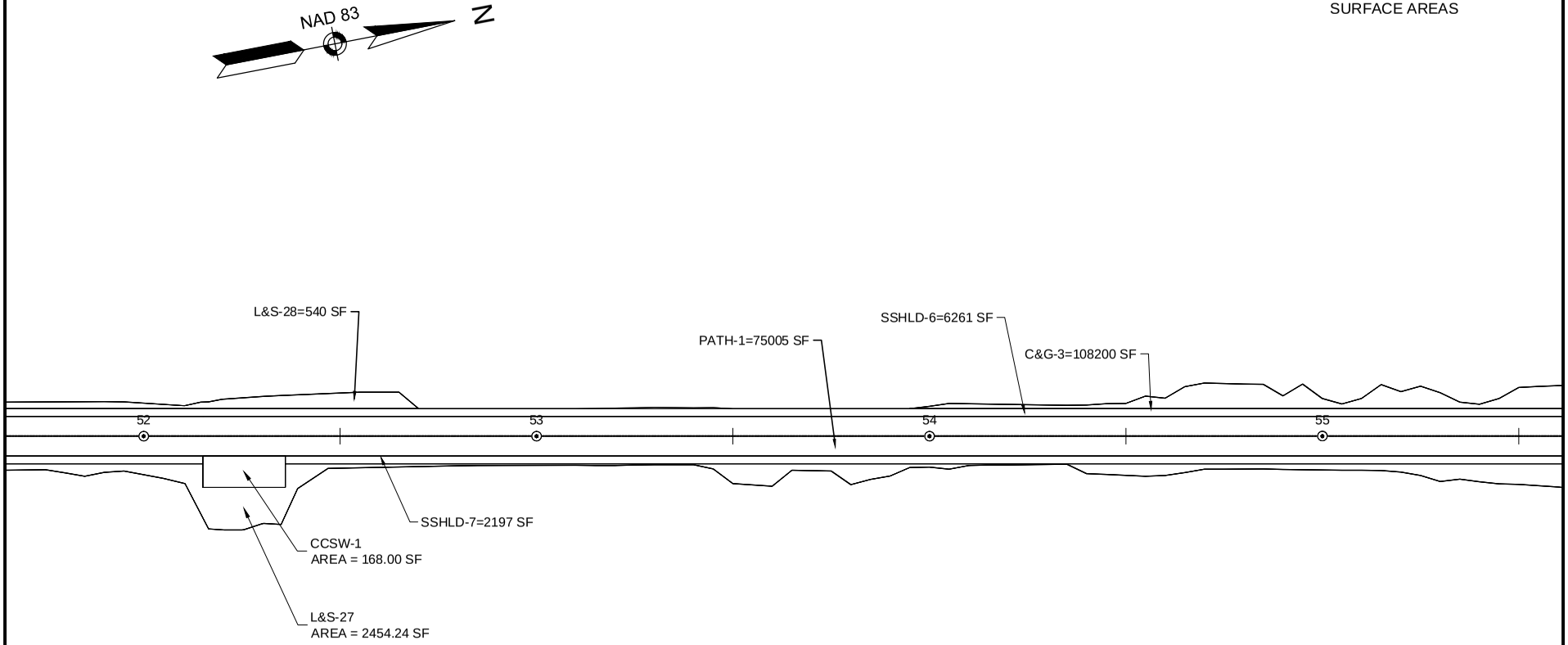

CONCORD
BRUCE FREEMAN RAIL TRAIL PHASE 2C

STATE	FED. AID PROJ. NO.	SHEET NO.	TOTAL SHEETS
MA	----	17	48
PROJECT FILE NO.	605189		

SURFACE AREAS

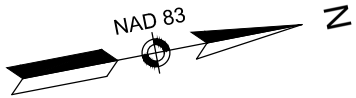

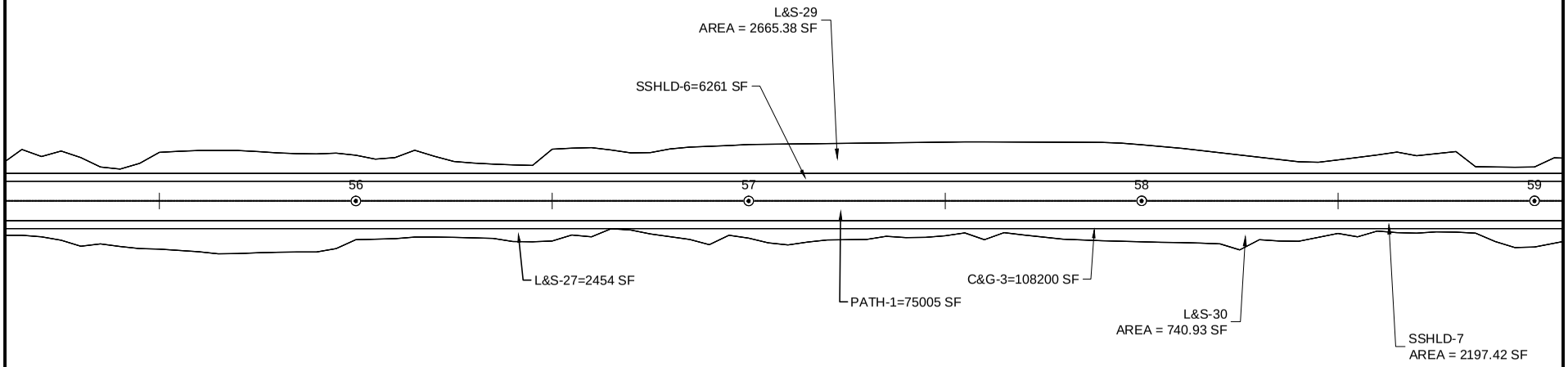

CONCORD
BRUCE FREEMAN RAIL TRAIL PHASE 2C

STATE	FED. AID PROJ. NO.	SHEET NO.	TOTAL SHEETS
MA	----	18	48
PROJECT FILE NO.	605189		

SURFACE AREAS

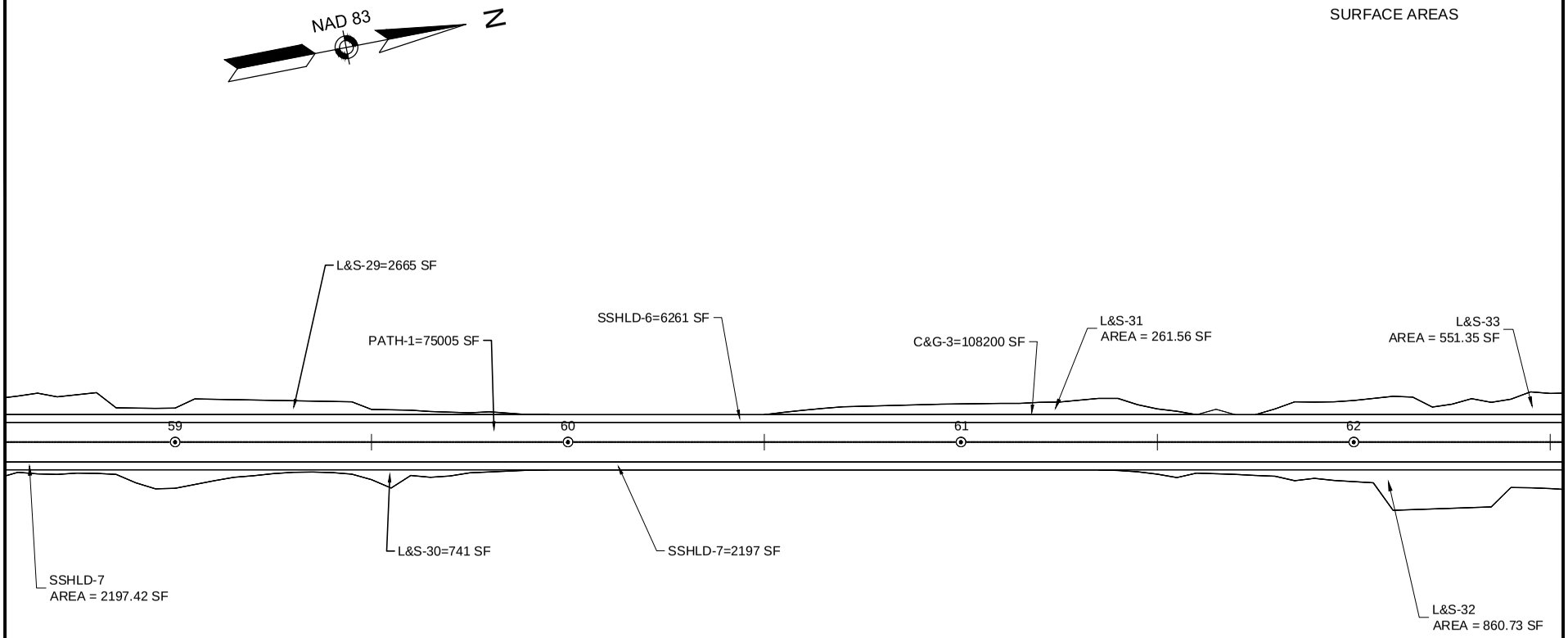

CONCORD
BRUCE FREEMAN RAIL TRAIL PHASE 2C

STATE	FED. AID PROJ. NO.	SHEET NO.	TOTAL SHEETS
MA	----	19	48
PROJECT FILE NO.	605189		

SURFACE AREAS

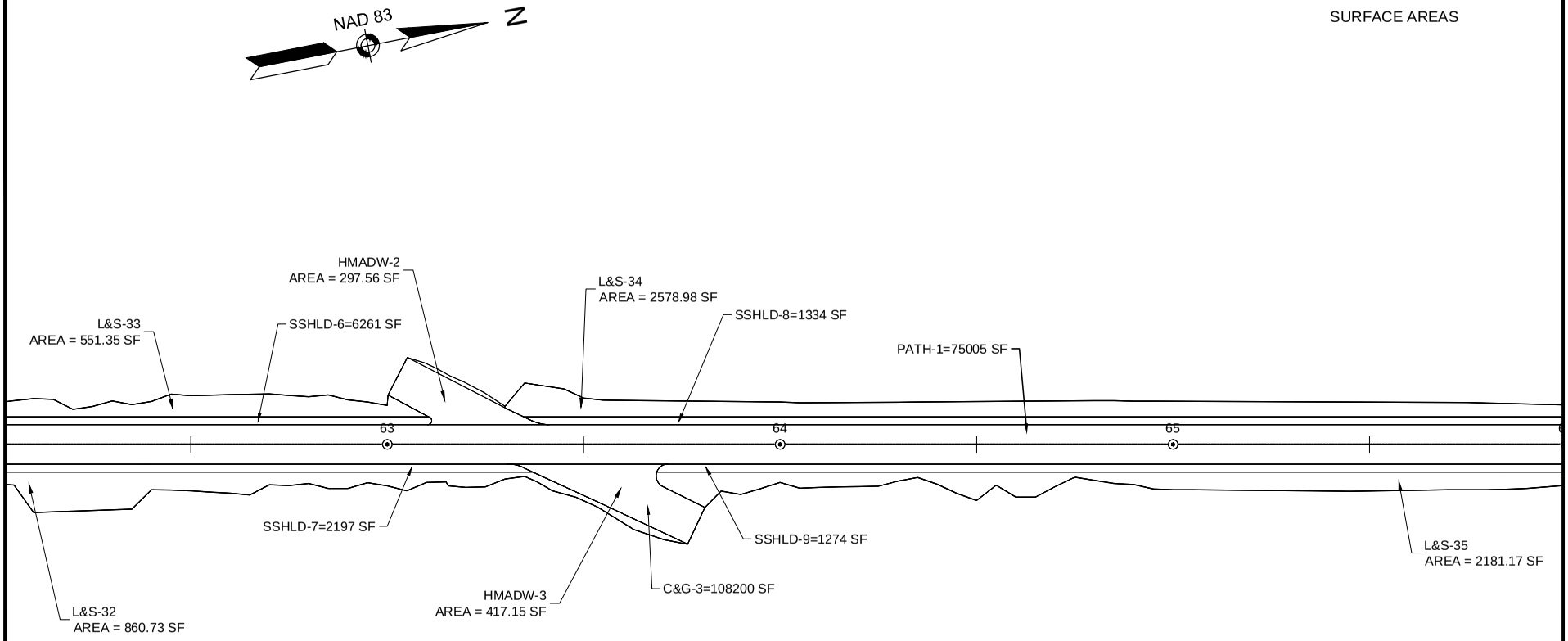

CONCORD
BRUCE FREEMAN RAIL TRAIL PHASE 2C

STATE	FED. AID PROJ. NO.	SHEET NO.	TOTAL SHEETS
MA	----	20	48
PROJECT FILE NO.	605189		

SURFACE AREAS

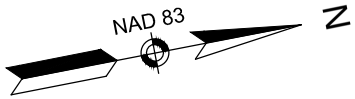

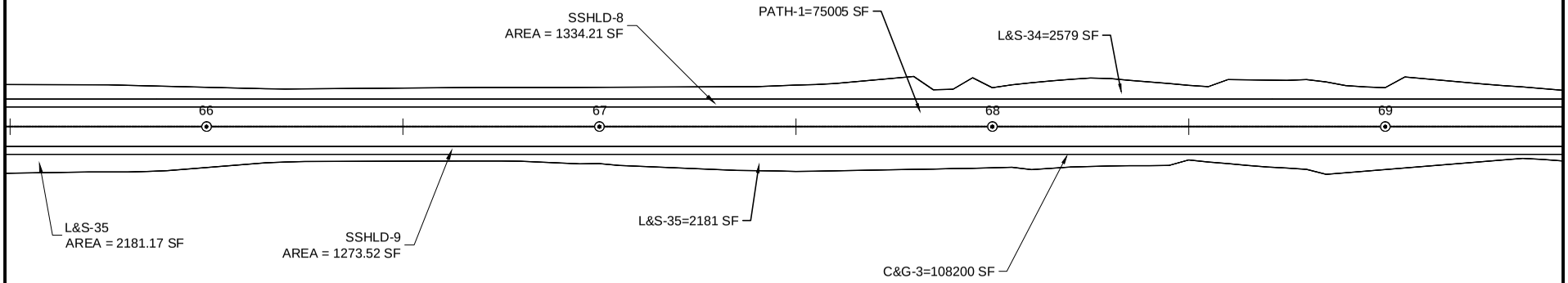

CONCORD
BRUCE FREEMAN RAIL TRAIL PHASE 2C

STATE	FED. AID PROJ. NO.	SHEET NO.	TOTAL SHEETS
MA	----	21	48
PROJECT FILE NO.	605189		

SURFACE AREAS

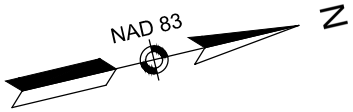

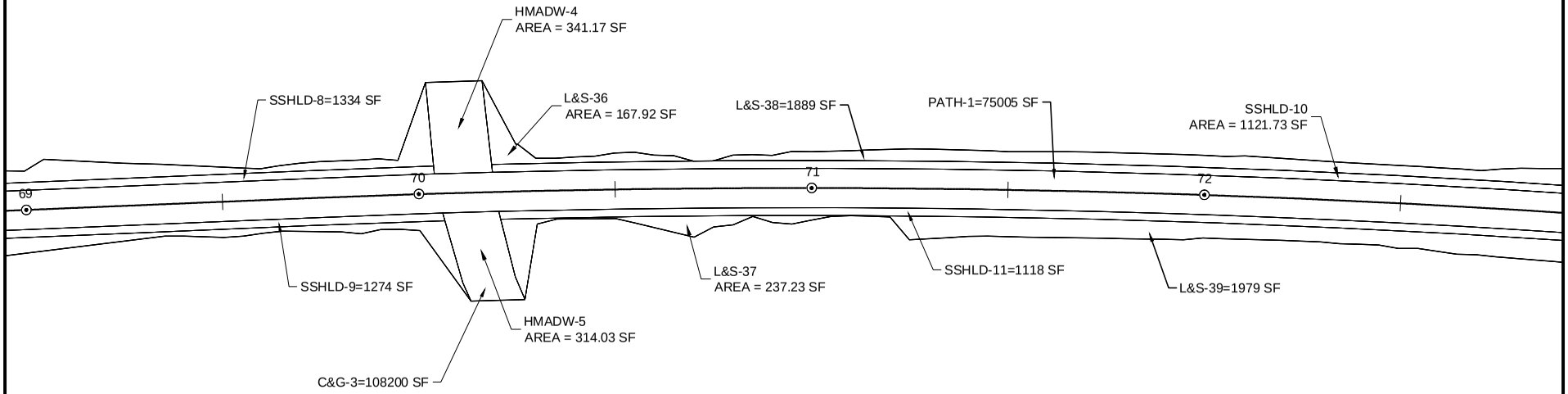

CONCORD
BRUCE FREEMAN RAIL TRAIL PHASE 2C

STATE	FED. AID PROJ. NO.	SHEET NO.	TOTAL SHEETS
MA	----	22	48
PROJECT FILE NO.	605189		

SURFACE AREAS

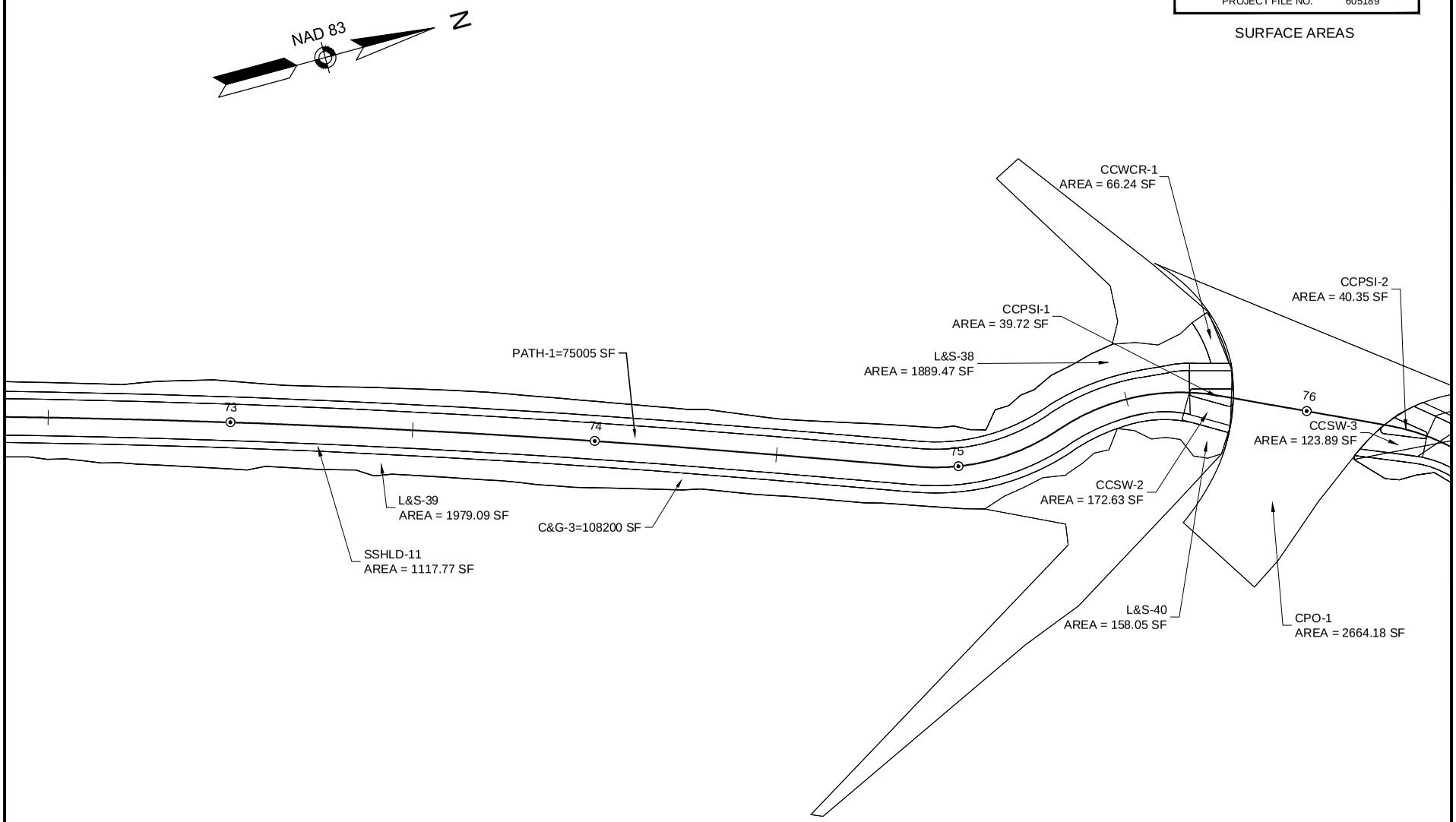

CONCORD
BRUCE FREEMAN RAIL TRAIL PHASE 2C

STATE	FED. AID PROJ. NO.	SHEET NO.	TOTAL SHEETS
MA	----	23	48
PROJECT FILE NO.	605189		

SURFACE AREAS

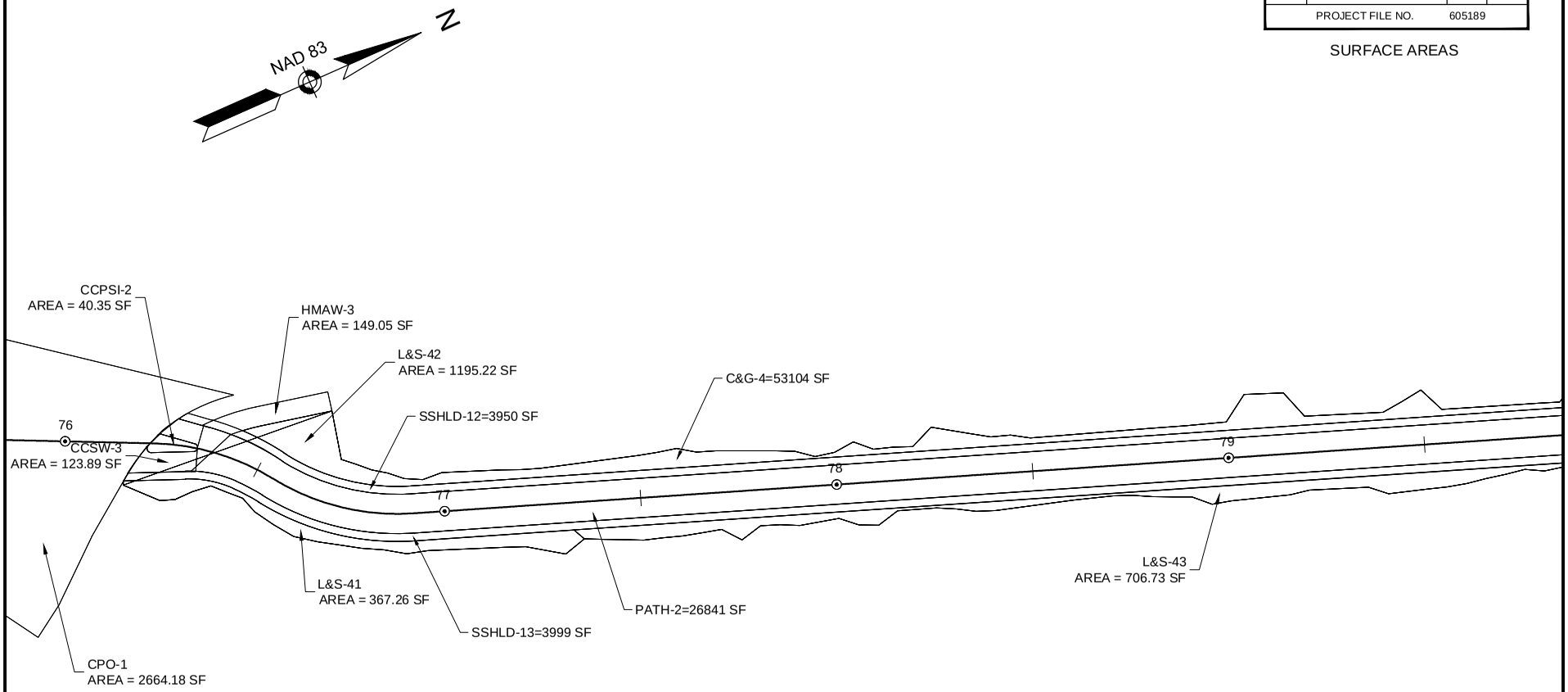

CONCORD
BRUCE FREEMAN RAIL TRAIL PHASE 2C

STATE	FED. AID PROJ. NO.	SHEET NO.	TOTAL SHEETS
MA	----	24	48
PROJECT FILE NO.	605189		

SURFACE AREAS

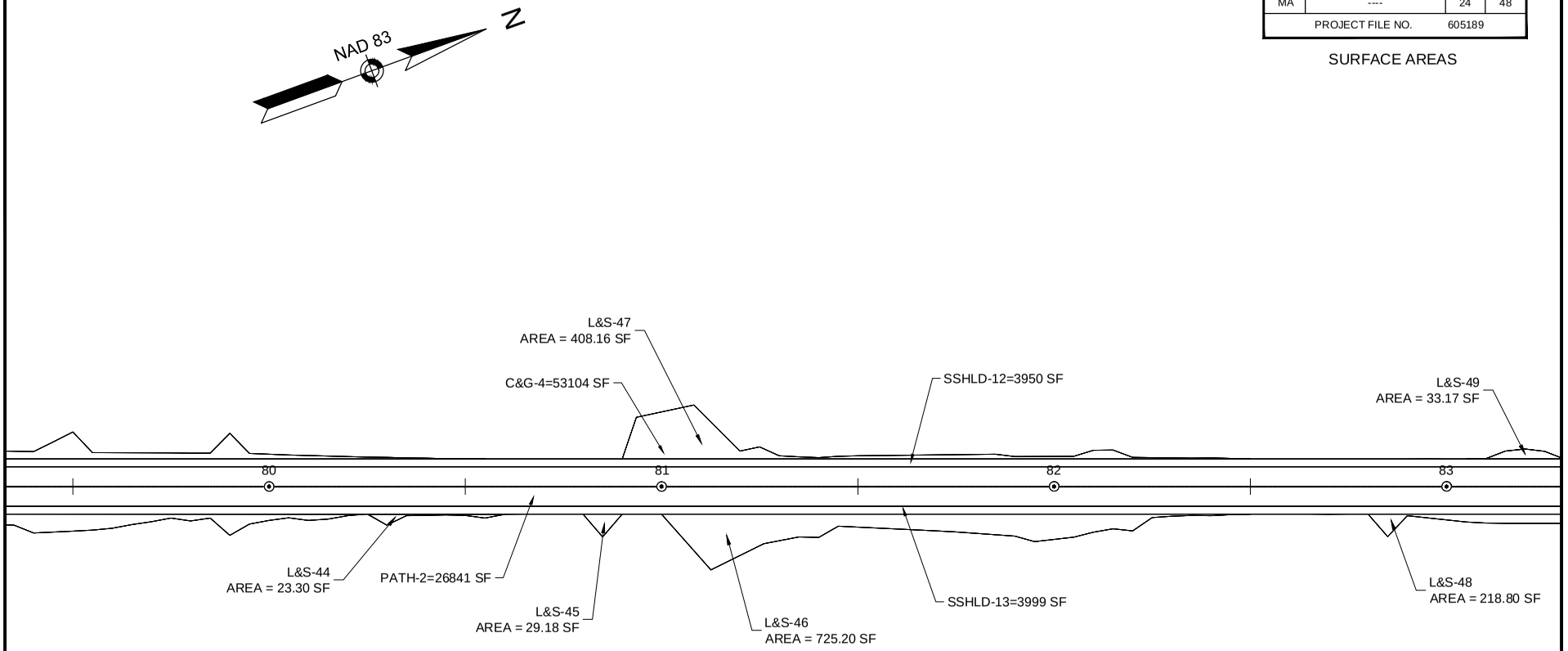

CONCORD
BRUCE FREEMAN RAIL TRAIL PHASE 2C

STATE	FED. AID PROJ. NO.	SHEET NO.	TOTAL SHEETS
MA	----	25	48
PROJECT FILE NO.	605189		

SURFACE AREAS

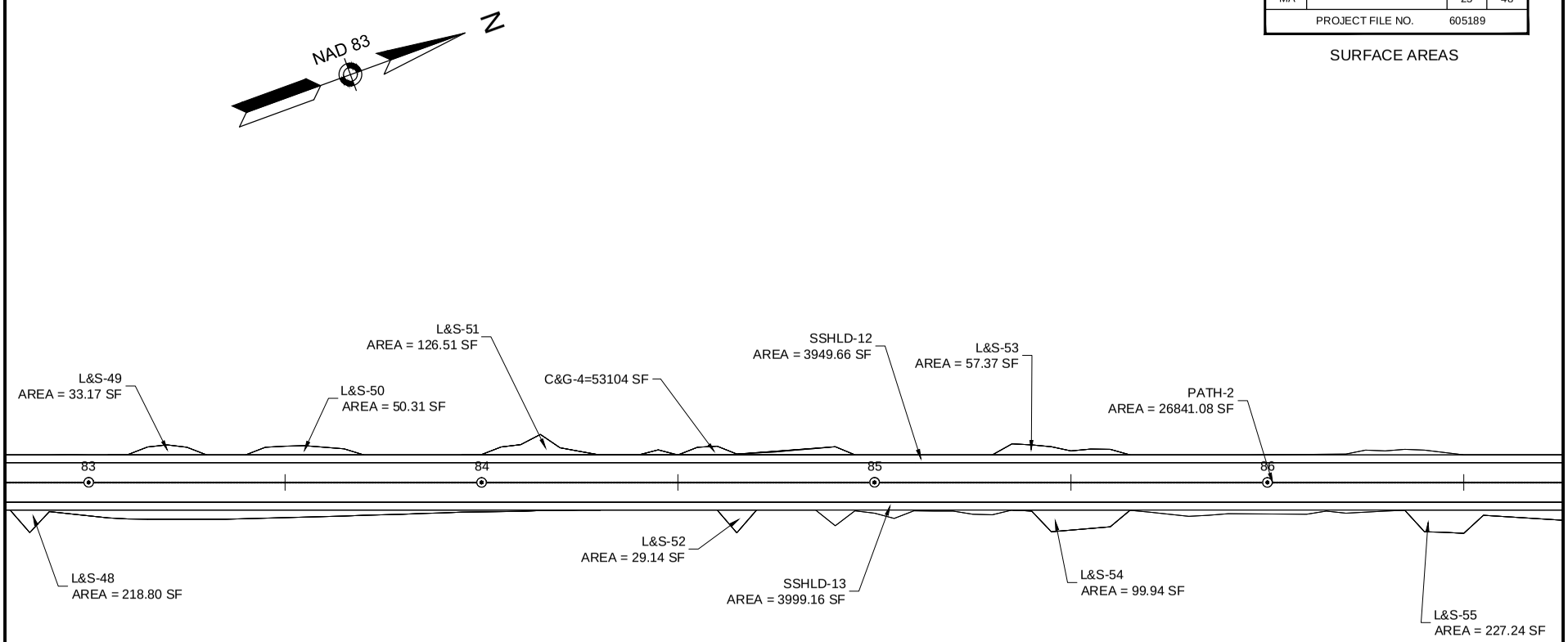

CONCORD
BRUCE FREEMAN RAIL TRAIL PHASE 2C

STATE	FED. AID PROJ. NO.	SHEET NO.	TOTAL SHEETS
MA	----	26	48
PROJECT FILE NO.	605189		

SURFACE AREAS

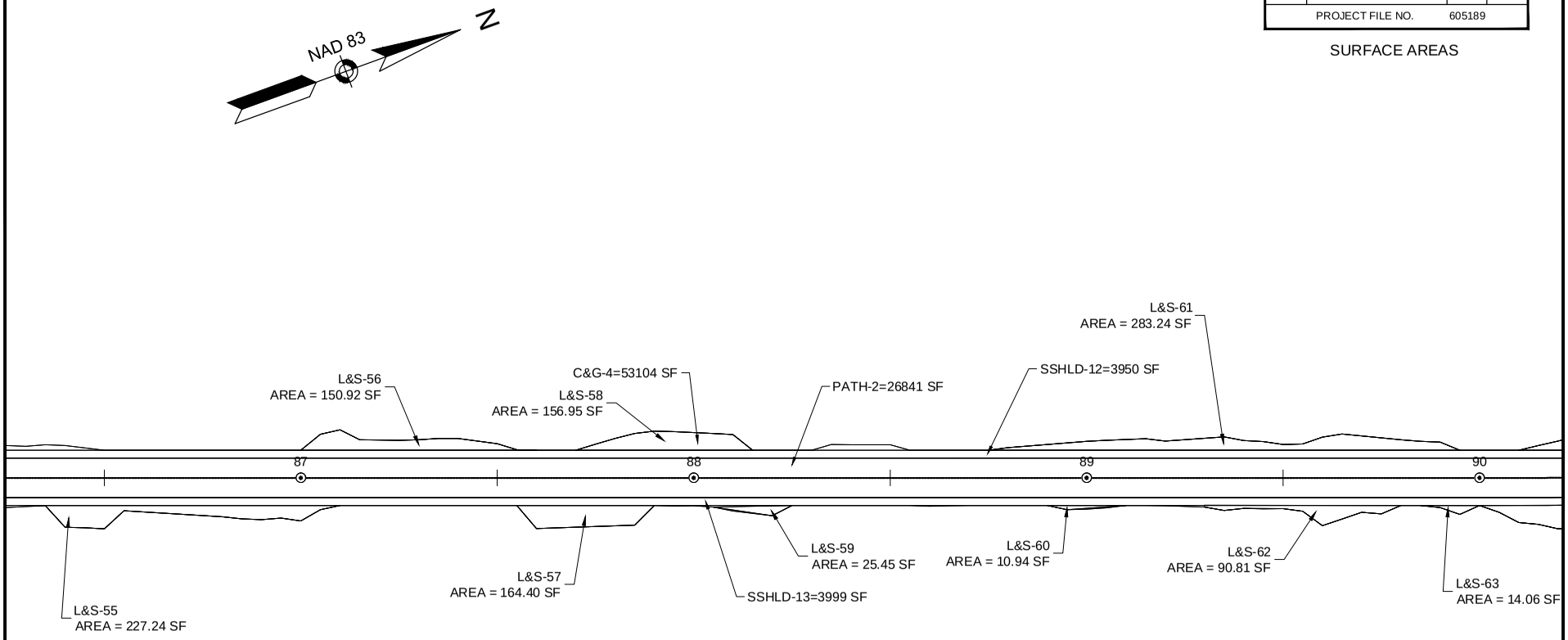

CONCORD
BRUCE FREEMAN RAIL TRAIL PHASE 2C

STATE	FED. AID PROJ. NO.	SHEET NO.	TOTAL SHEETS
MA	----	27	48
PROJECT FILE NO.	605189		

SURFACE AREAS

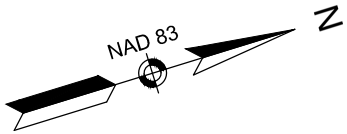

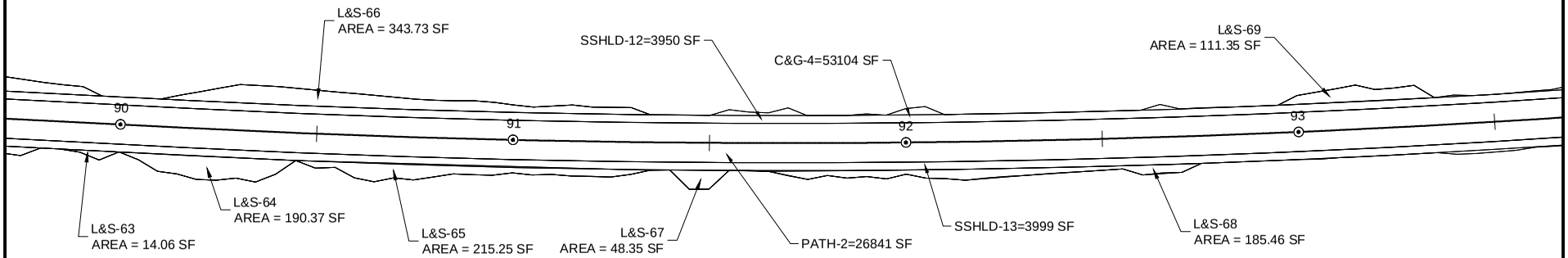

CONCORD
BRUCE FREEMAN RAIL TRAIL PHASE 2C

STATE	FED. AID PROJ. NO.	SHEET NO.	TOTAL SHEETS
MA	----	28	48
PROJECT FILE NO.	605189		

SURFACE AREAS

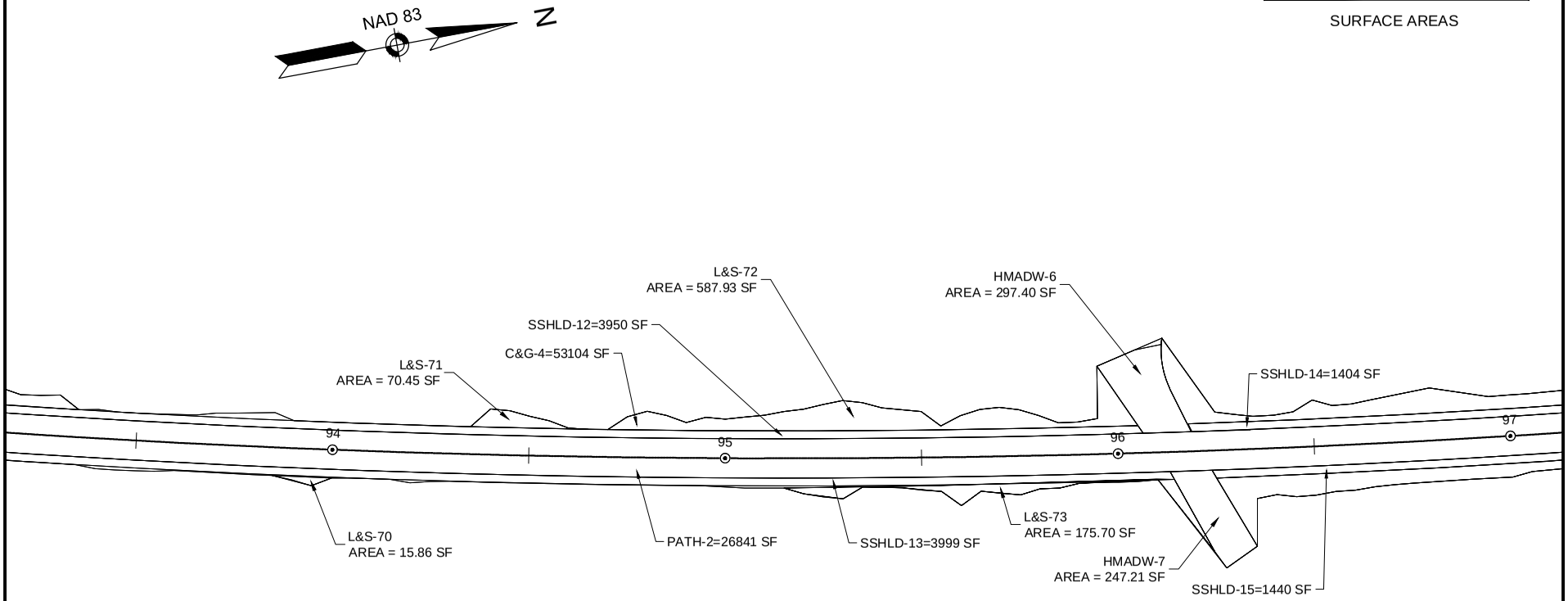

CONCORD
BRUCE FREEMAN RAIL TRAIL PHASE 2C

STATE	FED. AID PROJ. NO.	SHEET NO.	TOTAL SHEETS
MA	----	29	48
PROJECT FILE NO.	605189		

SURFACE AREAS

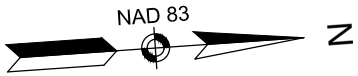

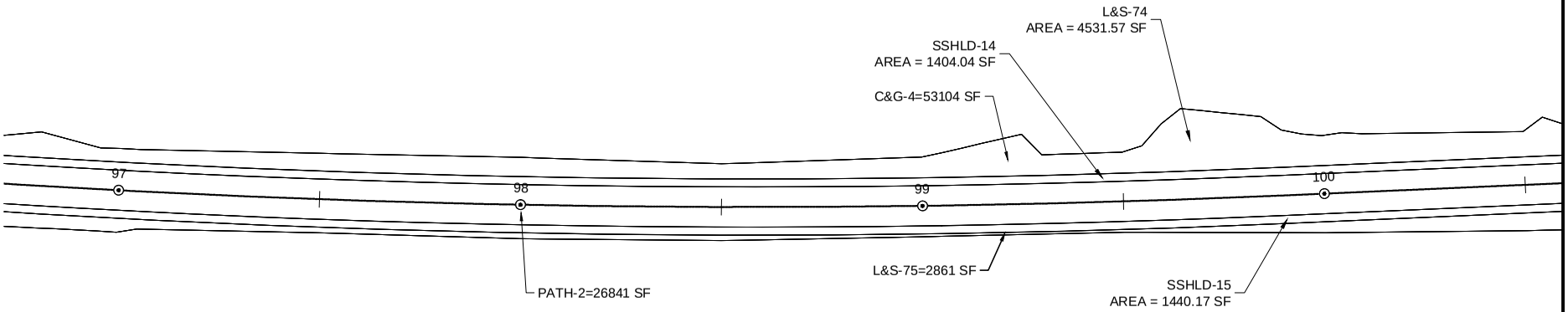

CONCORD
BRUCE FREEMAN RAIL TRAIL PHASE 2C

STATE	FED. AID PROJ. NO.	SHEET NO.	TOTAL SHEETS
MA	----	30	48
PROJECT FILE NO.	605189		

SURFACE AREAS

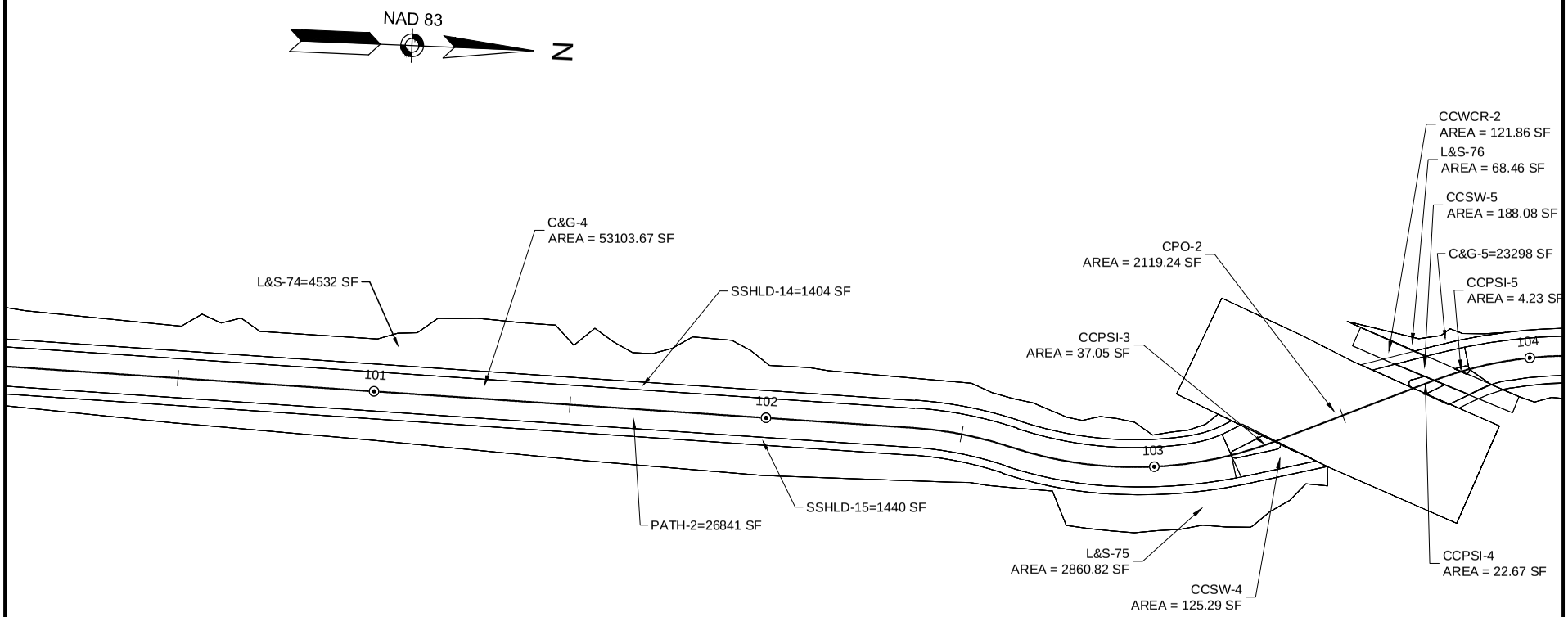

CONCORD
BRUCE FREEMAN RAIL TRAIL PHASE 2C

STATE	FED. AID PROJ. NO.	SHEET NO.	TOTAL SHEETS
MA	----	31	48
PROJECT FILE NO.	605189		

SURFACE AREAS

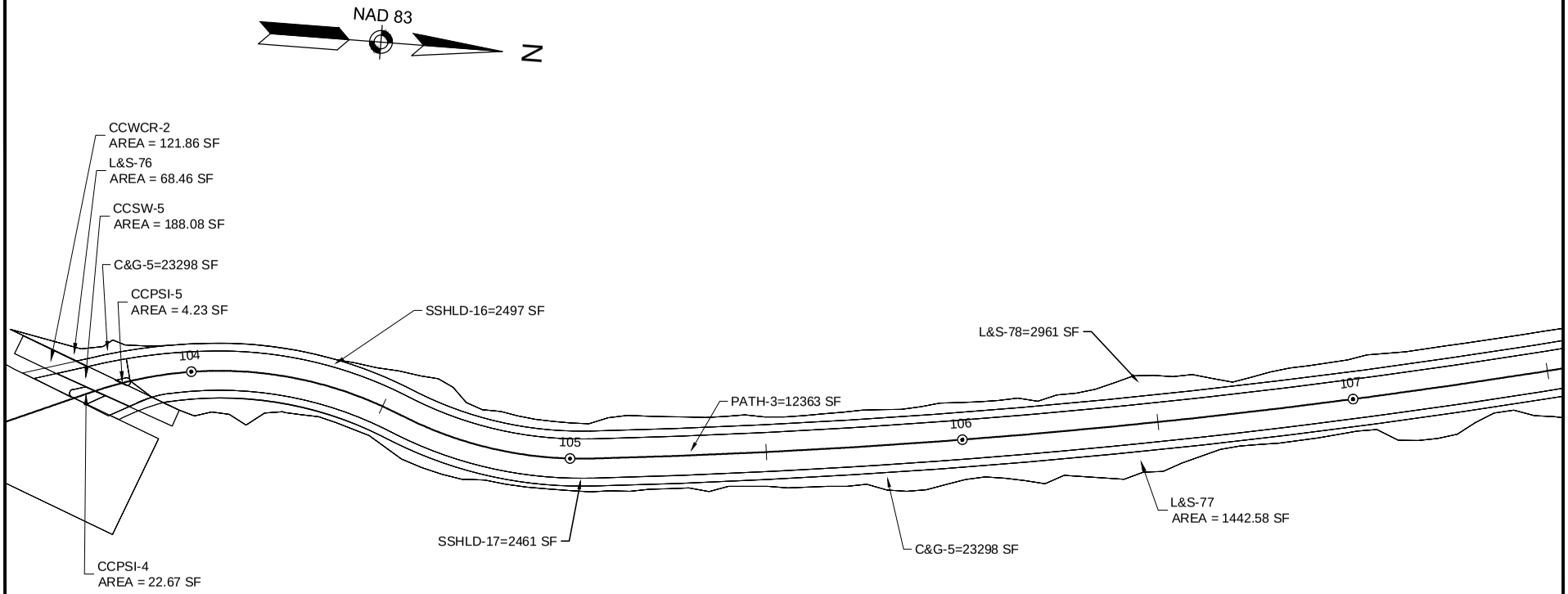

CONCORD
BRUCE FREEMAN RAIL TRAIL PHASE 2C

STATE	FED. AID PROJ. NO.	SHEET NO.	TOTAL SHEETS
MA	----	32	48
PROJECT FILE NO.	605189		

SURFACE AREAS

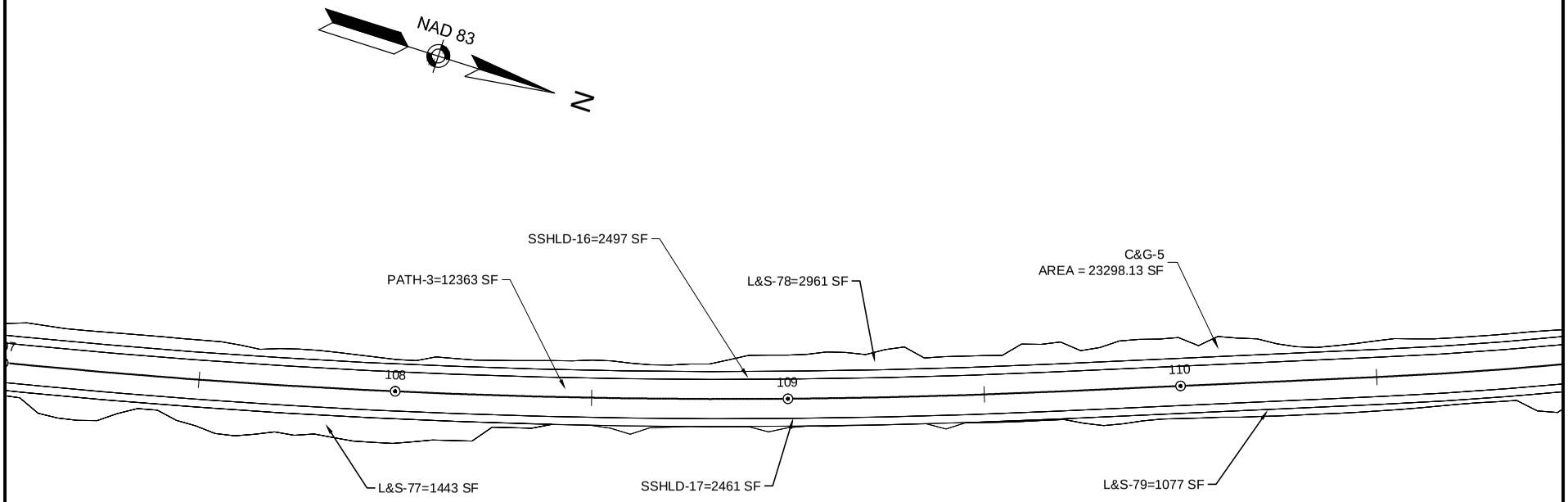

CONCORD
BRUCE FREEMAN RAIL TRAIL PHASE 2C

STATE	FED. AID PROJ. NO.	SHEET NO.	TOTAL SHEETS
MA	----	33	48
PROJECT FILE NO.	605189		

SURFACE AREAS

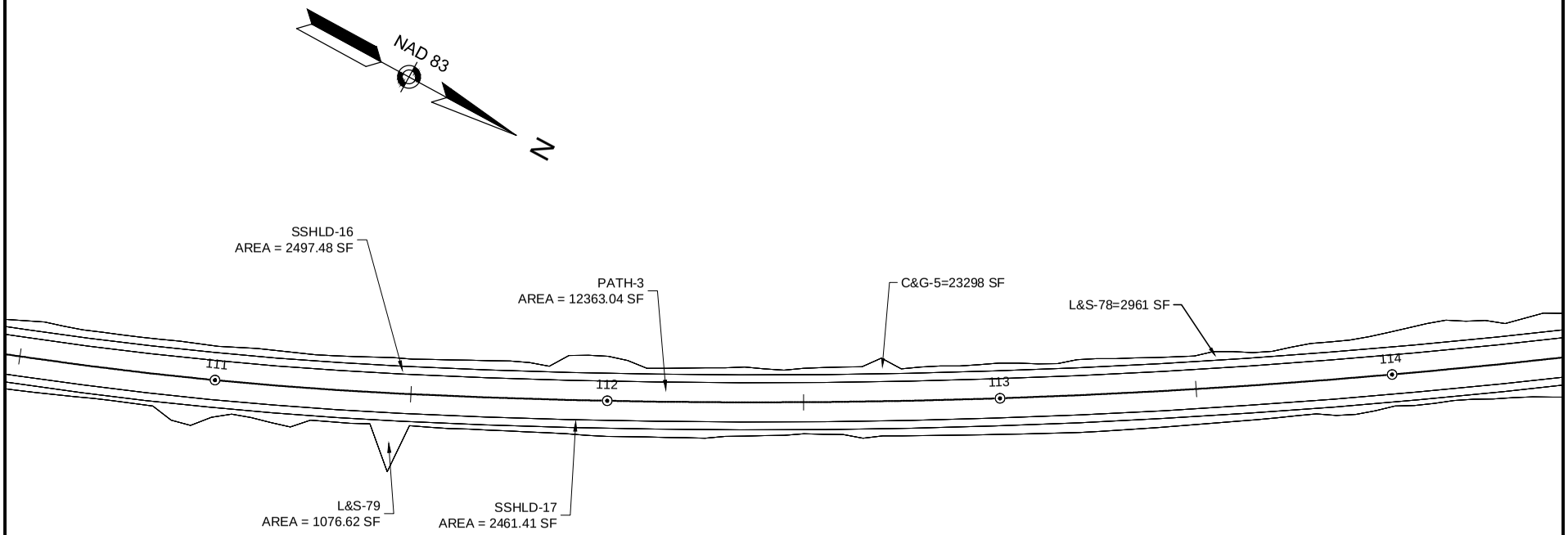

CONCORD
BRUCE FREEMAN RAIL TRAIL PHASE 2C

STATE	FED. AID PROJ. NO.	SHEET NO.	TOTAL SHEETS
MA	----	34	48
PROJECT FILE NO.	605189		

SURFACE AREAS

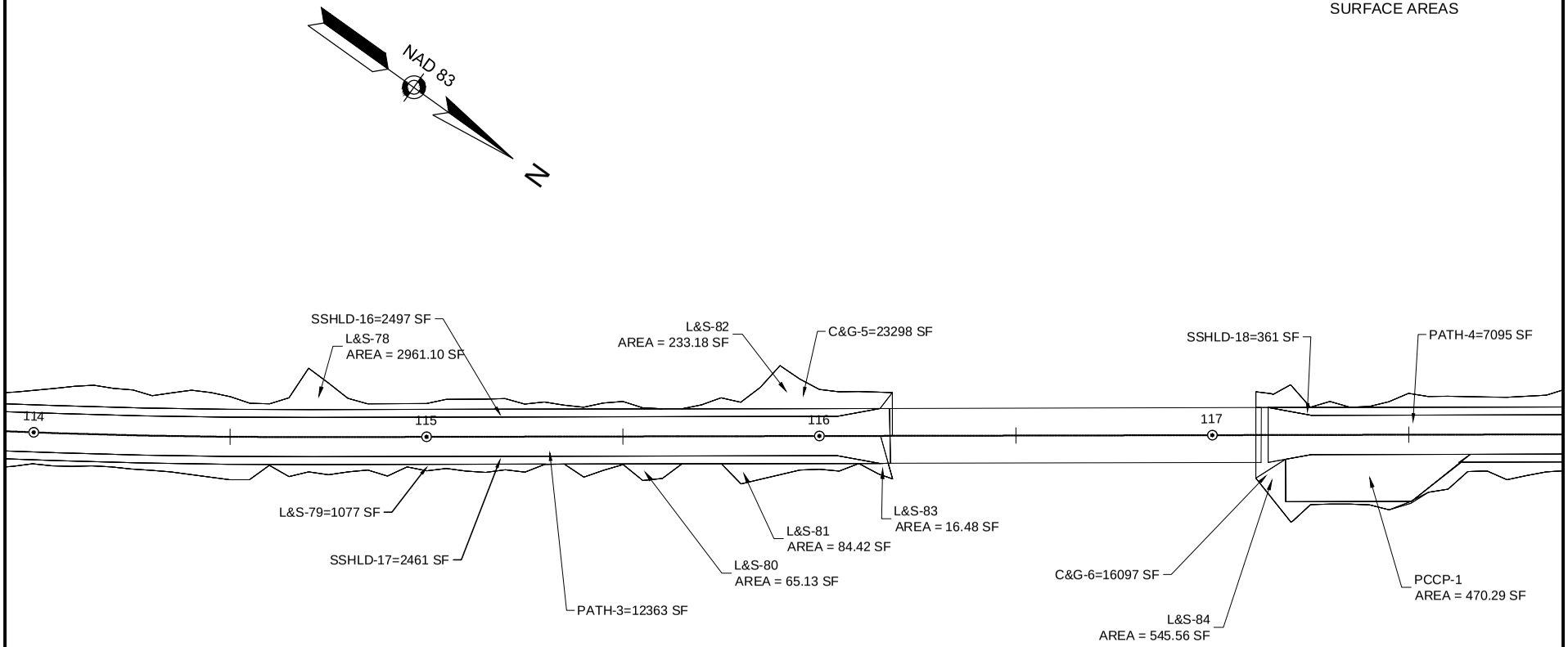

CONCORD
BRUCE FREEMAN RAIL TRAIL PHASE 2C

STATE	FED. AID PROJ. NO.	SHEET NO.	TOTAL SHEETS
MA	----	35	48
PROJECT FILE NO.	605189		

SURFACE AREAS

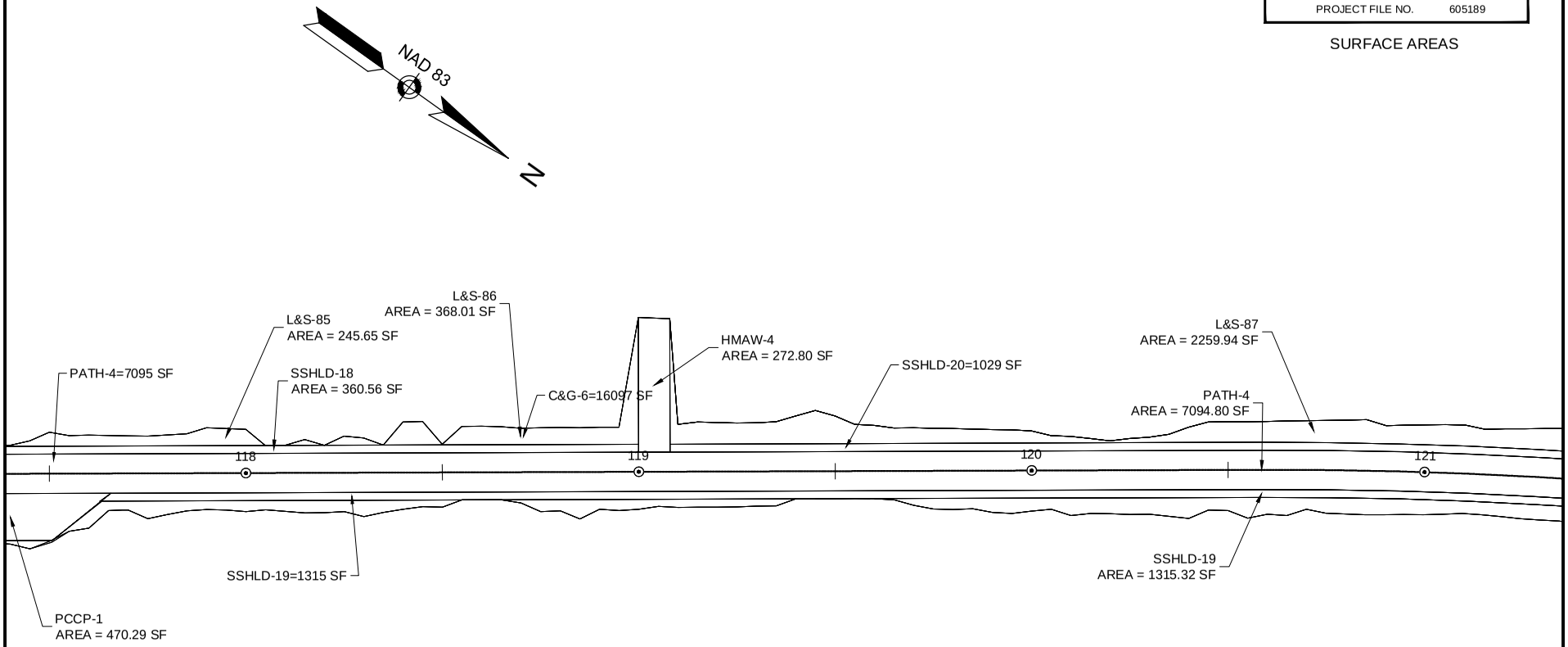

CONCORD
BRUCE FREEMAN RAIL TRAIL PHASE 2C

STATE	FED. AID PROJ. NO.	SHEET NO.	TOTAL SHEETS
MA	----	36	48
PROJECT FILE NO.	605189		

SURFACE AREAS

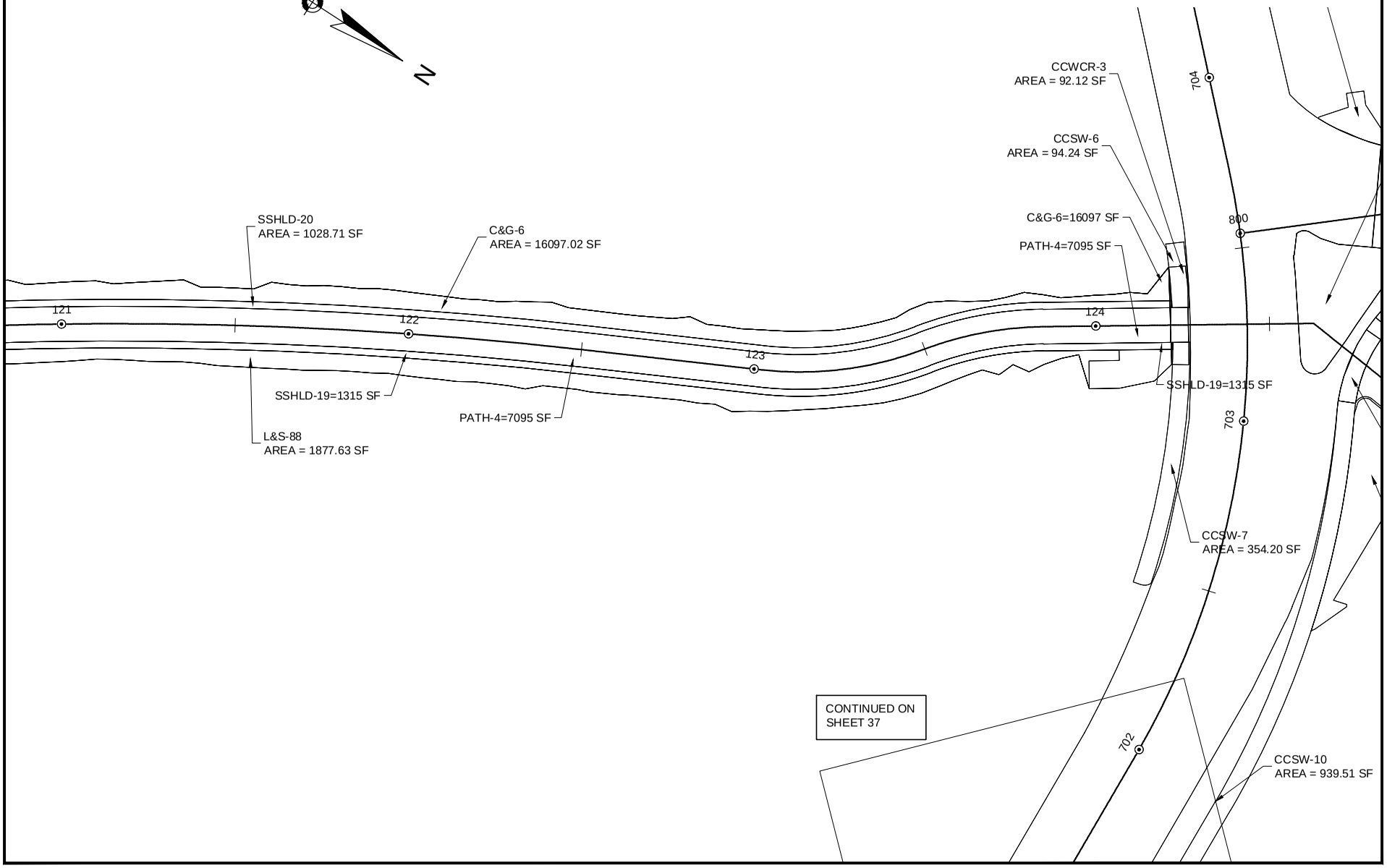

CONCORD
BRUCE FREEMAN RAIL TRAIL PHASE 2C

STATE	FED. AID PROJ. NO.	SHEET NO.	TOTAL SHEETS
MA	----	37	48
PROJECT FILE NO.	605189		

SURFACE AREAS

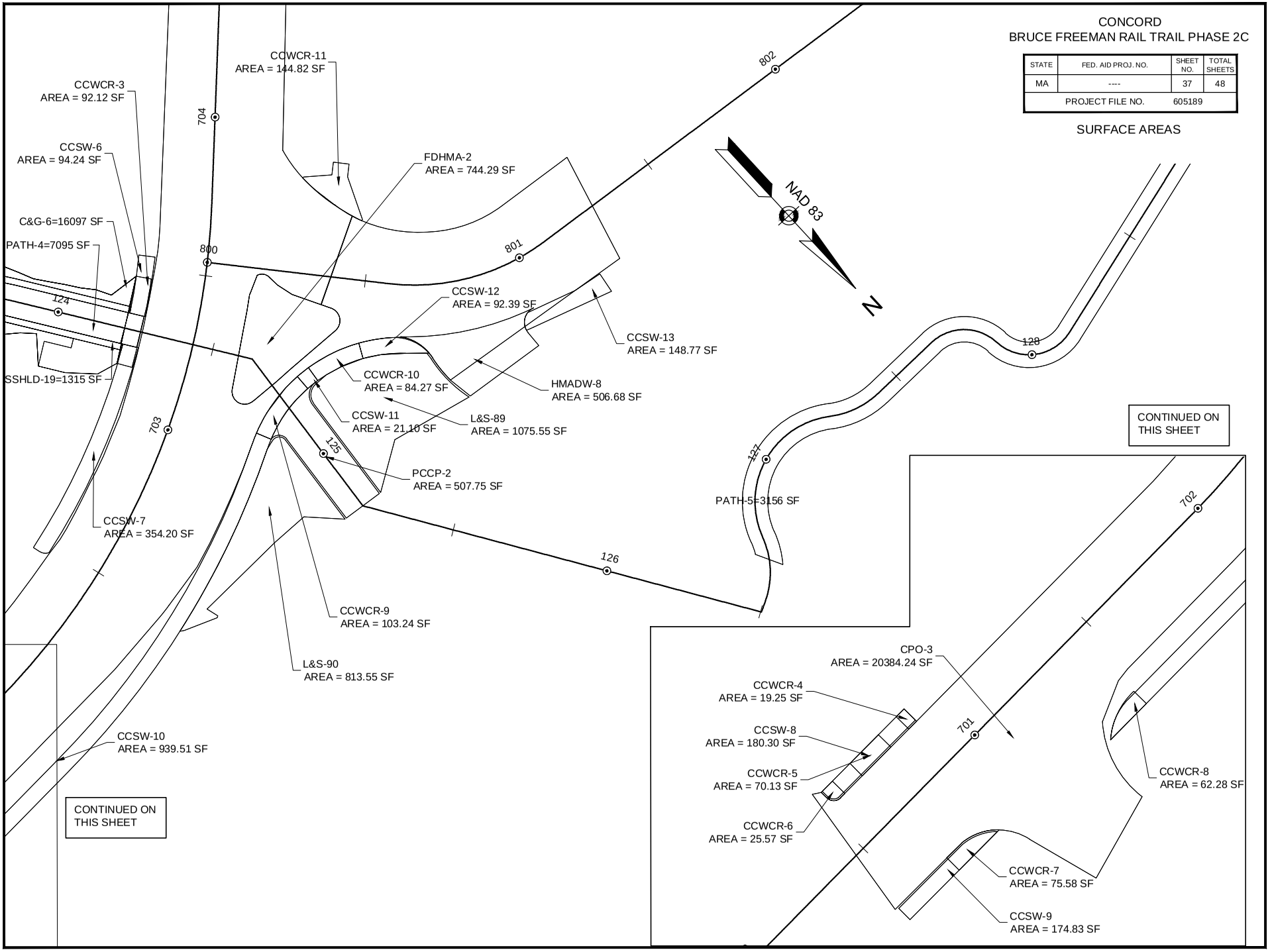

CONCORD
BRUCE FREEMAN RAIL TRAIL PHASE 2C

STATE	FED. AID PROJ. NO.	SHEET NO.	TOTAL SHEETS
MA	----	38	48
PROJECT FILE NO.	605189		

SURFACE AREAS

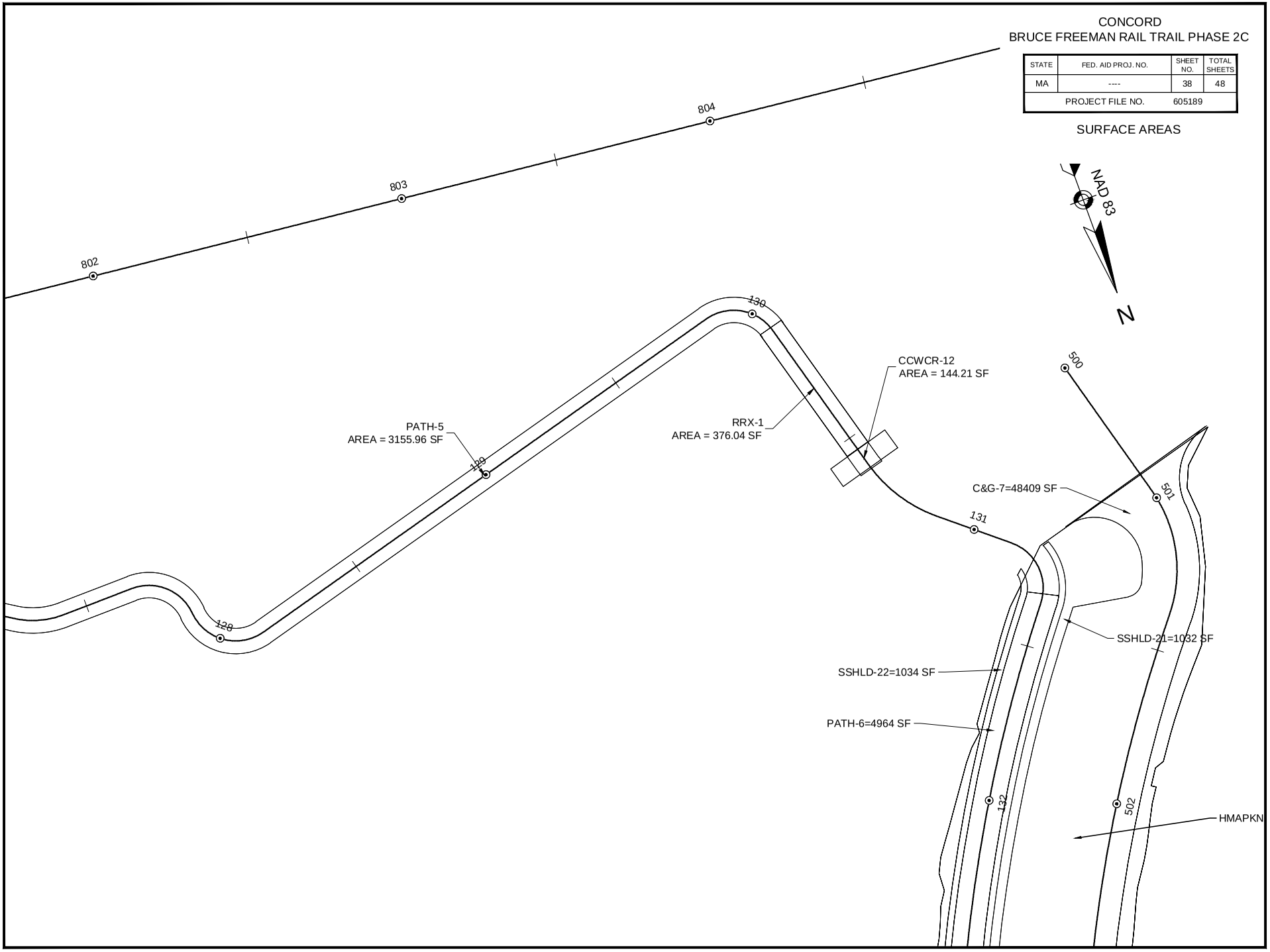

CONCORD
BRUCE FREEMAN RAIL TRAIL PHASE 2C

STATE	FED. AID PROJ. NO.	SHEET NO.	TOTAL SHEETS
MA	----	39	48
PROJECT FILE NO.	605189		

SURFACE AREAS

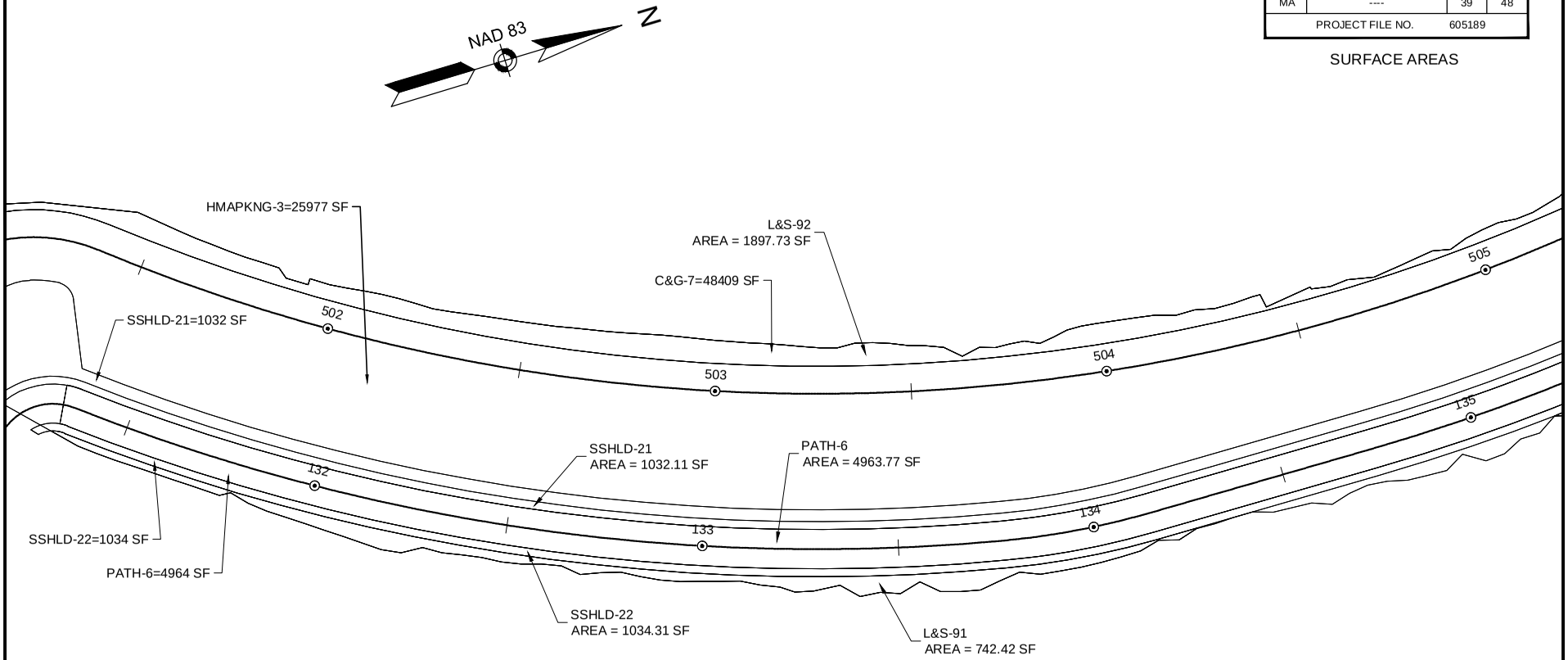

CONCORD
BRUCE FREEMAN RAIL TRAIL PHASE 2C

STATE	FED. AID PROJ. NO.	SHEET NO.	TOTAL SHEETS
MA	----	40	48
PROJECT FILE NO.	605189		

SURFACE AREAS

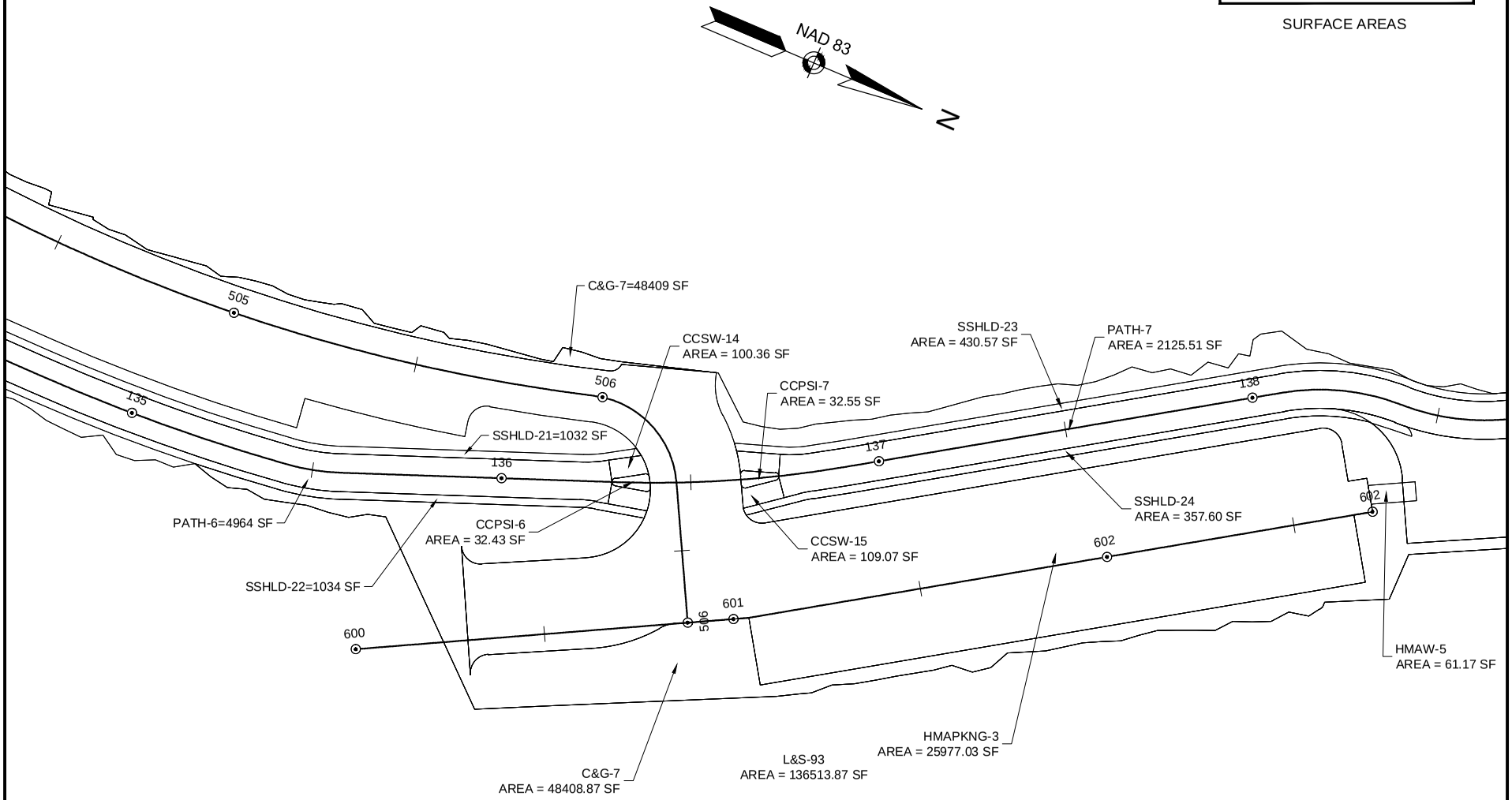

CONCORD
BRUCE FREEMAN RAIL TRAIL PHASE 2C

STATE	FED. AID PROJ. NO.	SHEET NO.	TOTAL SHEETS
MA	----	41	48
PROJECT FILE NO.	605189		

SURFACE AREAS

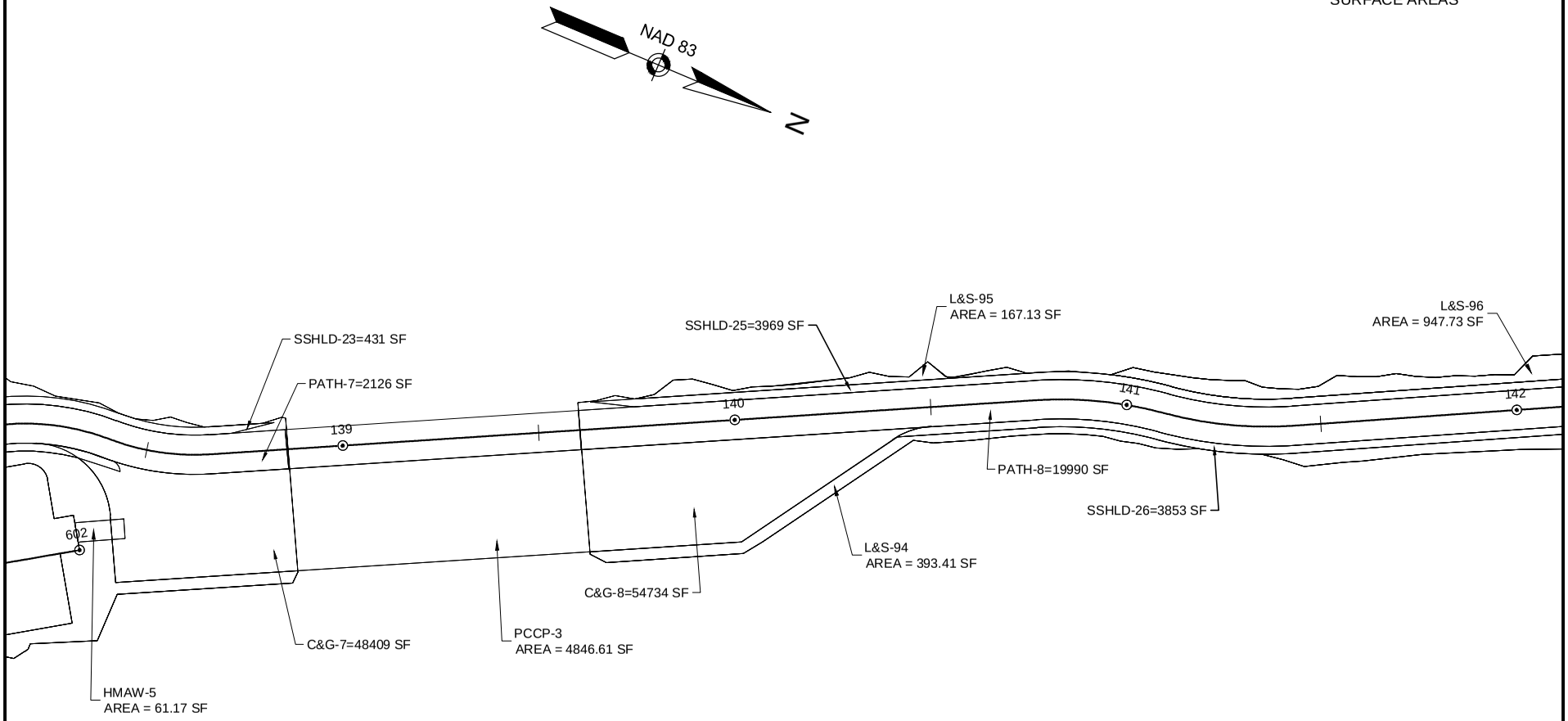

CONCORD
BRUCE FREEMAN RAIL TRAIL PHASE 2C

STATE	FED. AID PROJ. NO.	SHEET NO.	TOTAL SHEETS
MA	----	42	48
PROJECT FILE NO.	605189		

SURFACE AREAS

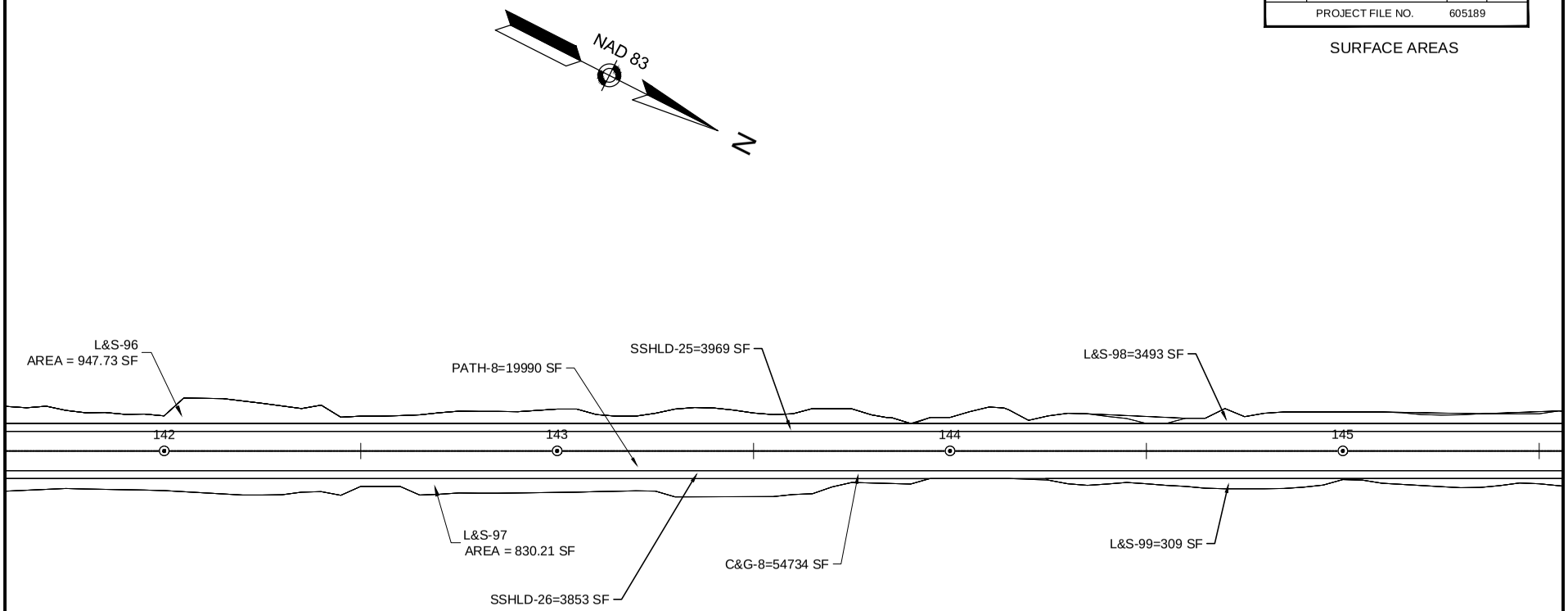

CONCORD
BRUCE FREEMAN RAIL TRAIL PHASE 2C

STATE	FED. AID PROJ. NO.	SHEET NO.	TOTAL SHEETS
MA	----	43	48
PROJECT FILE NO.	605189		

SURFACE AREAS

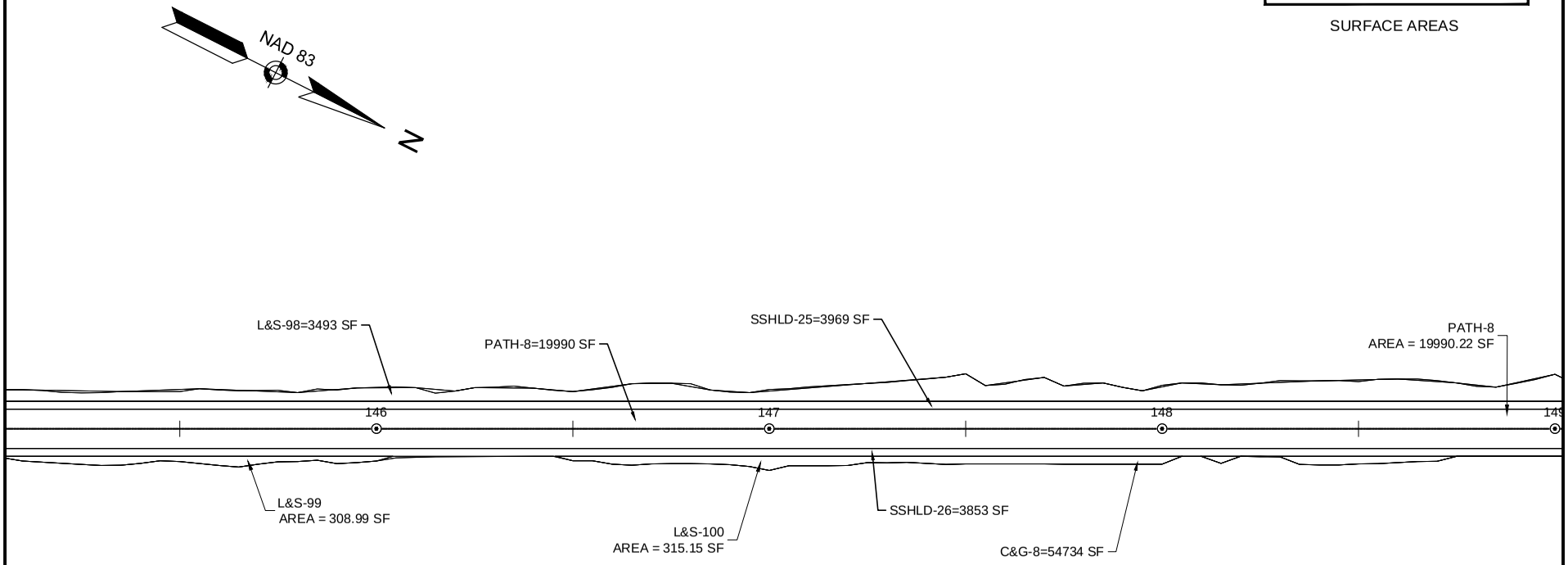

CONCORD
BRUCE FREEMAN RAIL TRAIL PHASE 2C

STATE	FED. AID PROJ. NO.	SHEET NO.	TOTAL SHEETS
MA	----	44	48
PROJECT FILE NO.	605189		

SURFACE AREAS

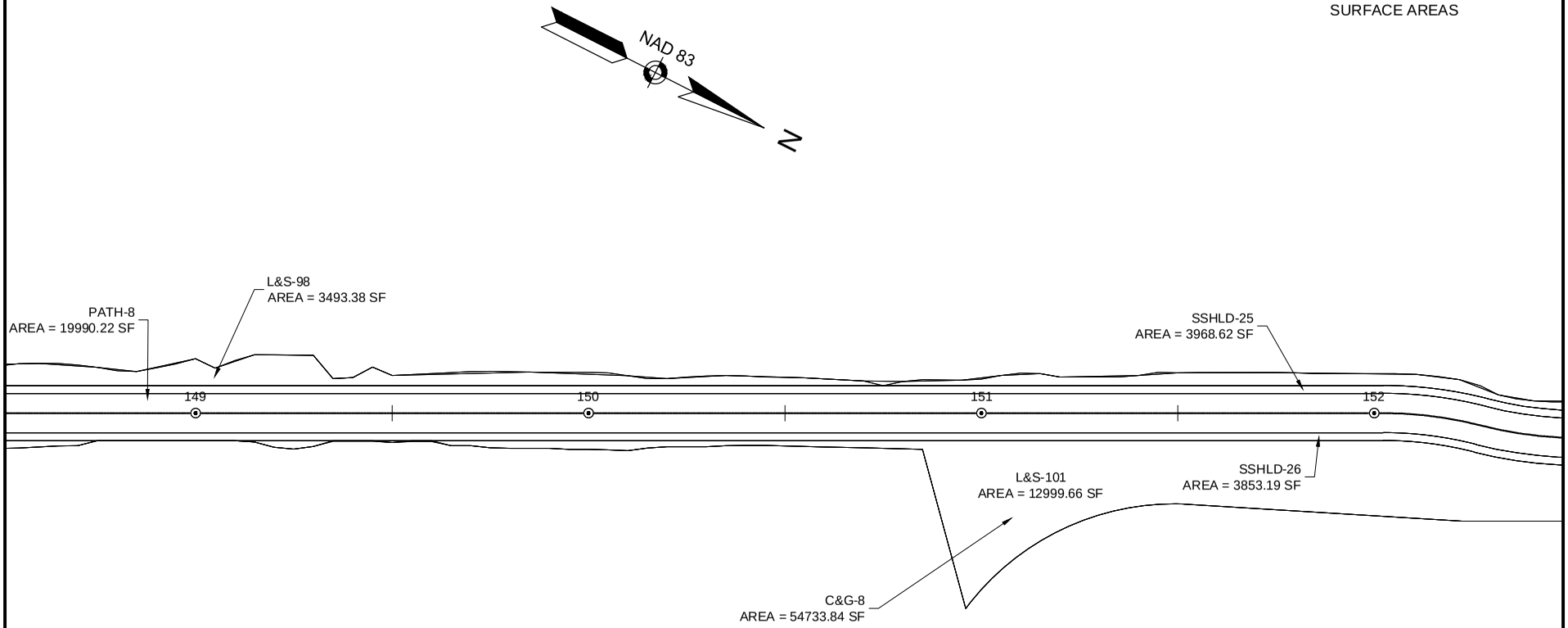

CONCORD
BRUCE FREEMAN RAIL TRAIL PHASE 2C

STATE	FED. AID PROJ. NO.	SHEET NO.	TOTAL SHEETS
MA	----	45	48
PROJECT FILE NO.	605189		

SURFACE AREAS

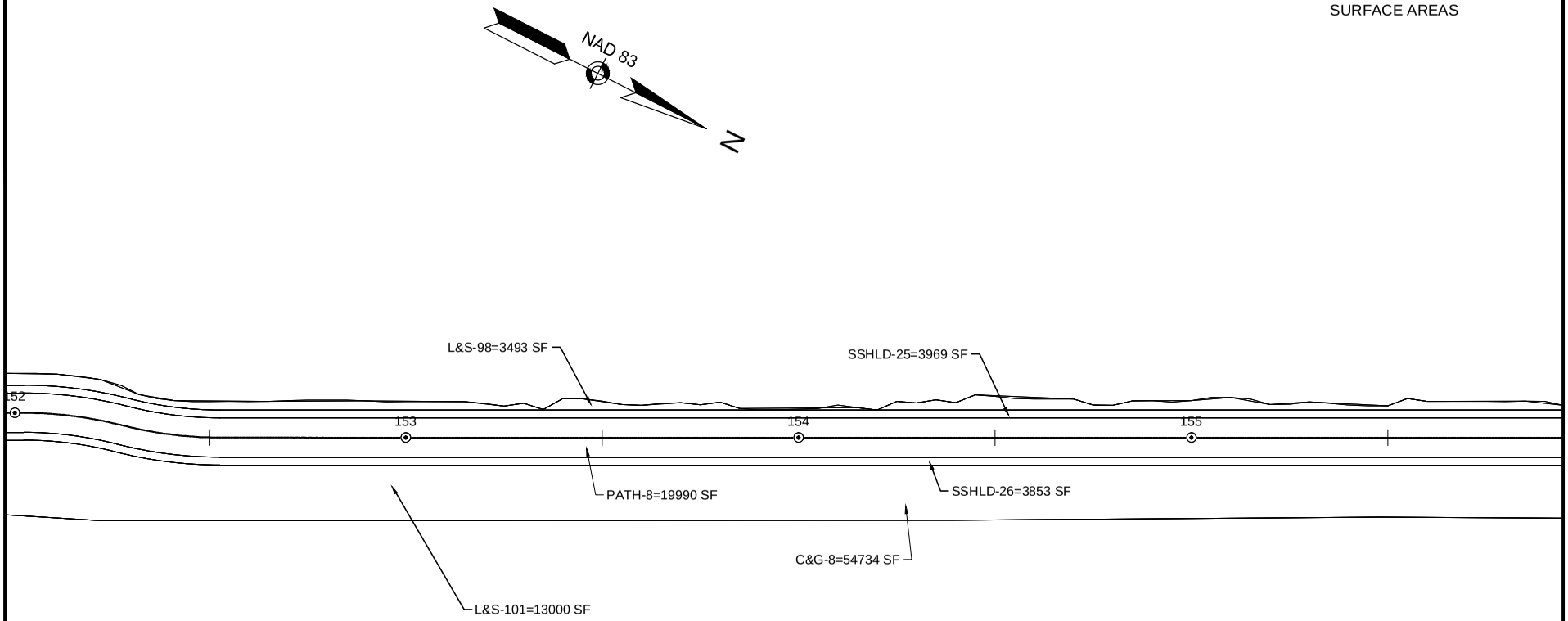

CONCORD
BRUCE FREEMAN RAIL TRAIL PHASE 2C

STATE	FED. AID PROJ. NO.	SHEET NO.	TOTAL SHEETS
MA	----	46	48
PROJECT FILE NO.	605189		

SURFACE AREAS

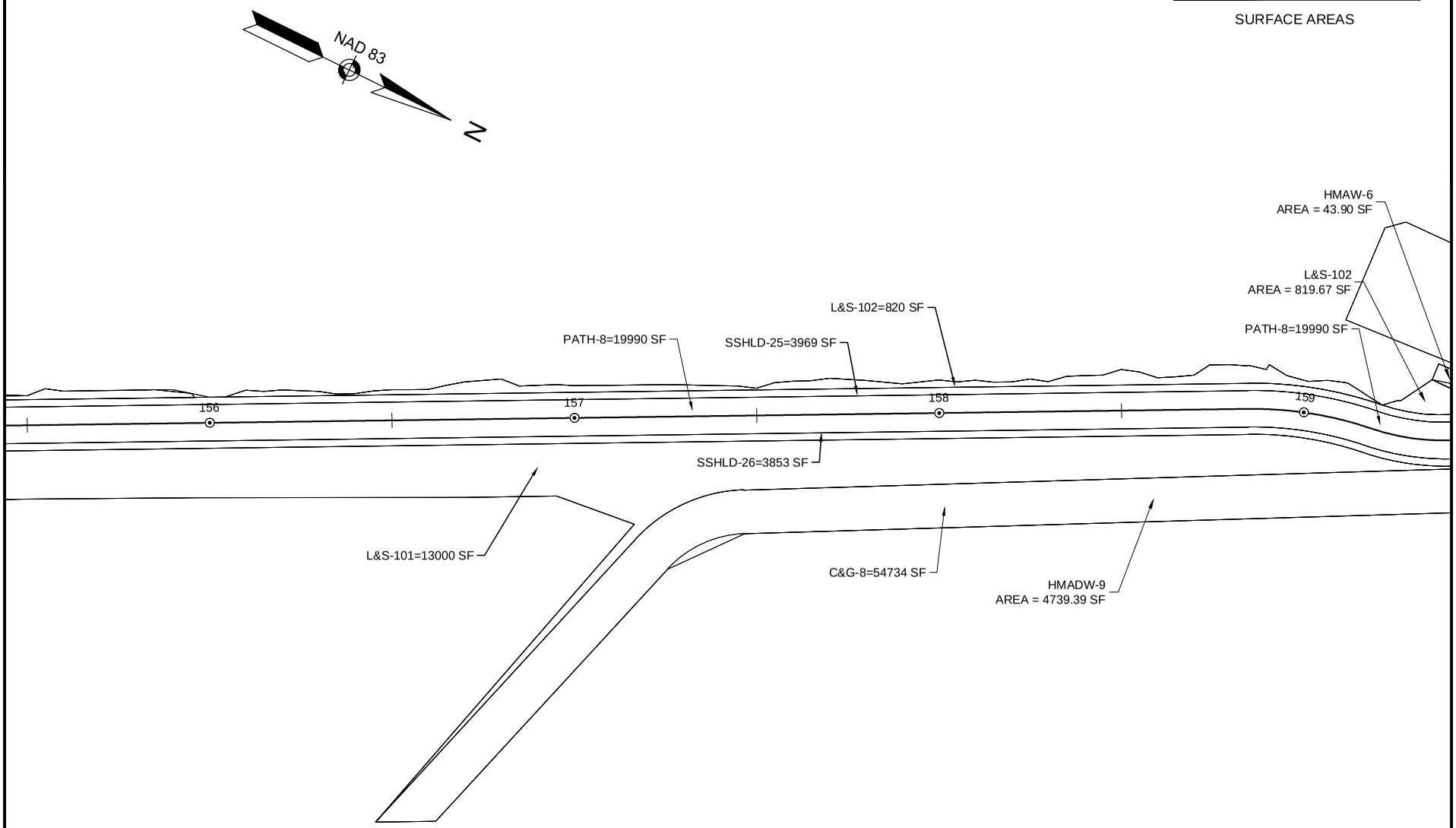

CONCORD
BRUCE FREEMAN RAIL TRAIL PHASE 2C

STATE	FED. AID PROJ. NO.	SHEET NO.	TOTAL SHEETS
MA	----	47	48
PROJECT FILE NO.	605189		

SURFACE AREAS

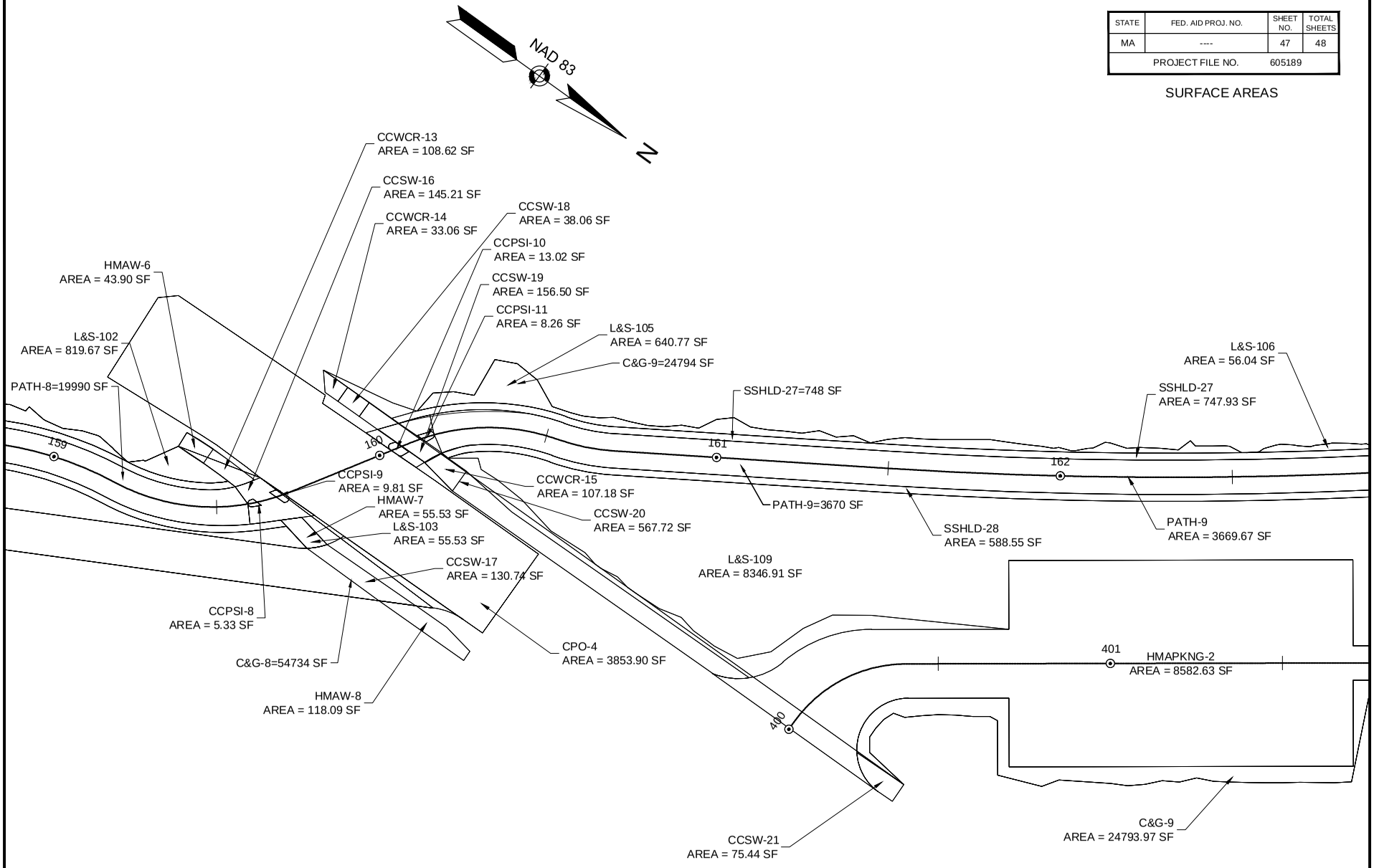

CONCORD
BRUCE FREEMAN RAIL TRAIL PHASE 2C

STATE	FED. AID PROJ. NO.	SHEET NO.	TOTAL SHEETS
MA	----	48	48
PROJECT FILE NO.	605189		

SURFACE AREAS

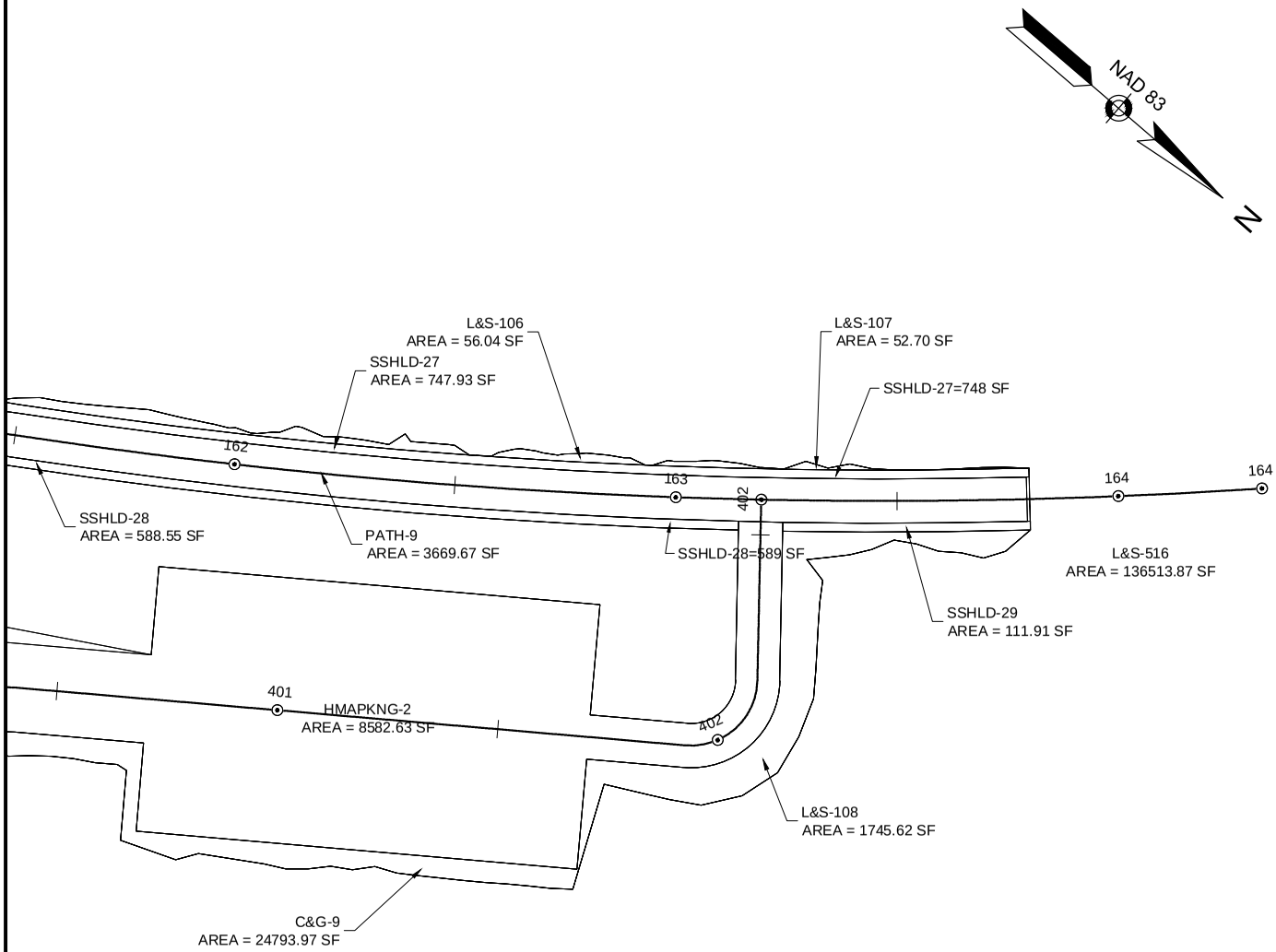

GPI Calculations

Greenman-Pedersen, Inc.

Location	Concord	**Job Number**	MAX-2010031 (605189)
Title	Bruce Freeman Rail Trail Phase 2C		
Calculated By		**Checked By**	

Hot Mix Asphalt Path	
PATH (SF)	
PATH-1	75004.6
PATH-2	26841.1
PATH-3	12363.0
PATH-4	7094.8
PATH-5	3156.0
PATH-6	4963.8
PATH-7	2125.5
PATH-8	19990.2
PATH-9	3669.7
TOTAL =	155,209 SF

Pavement Milling & Overlay	
CPO (SF)	
CPO-1	2664.2
CPO-2	2119.2
CPO-3	20384.2
CPO-4	3853.9
TOTAL =	29,022 SF

Hot Mix Asphalt Walk	
HMAW (SF)	
HMAW-1	2063.6
HMAW-2	4470.7
HMAW-3	149.0
HMAW-4	272.8
HMAW-5	61.2
HMAW-6	43.9
HMAW-7	55.5
HMAW-8	118.1
TOTAL =	7,235 SF

Cement Concrete Paver Splitter Islands	
CCPSI (SF)	
CCPSI-1	39.7
CCPSI-2	40.4
CCPSI-3	37.1
CCPSI-4	22.7
CCPSI-5	4.2
CCPSI-6	32.4
CCPSI-7	32.5
CCPSI-8	5.3
CCPSI-9	9.8
CCPSI-10	13.0
CCPSI-11	8.3
TOTAL =	245 SF

Cement Concrete Wheelchair Ramps	
WCR (SF)	
CCWCR-1	66.2
CCWCR-2	121.9
CCWCR-3	92.1
CCWCR-4	19.3
CCWCR-5	70.1
CCWCR-6	25.6
CCWCR-7	75.6
CCWCR-8	62.3
CCWCR-9	103.2
CCWCR-10	84.3
CCWCR-11	144.8
CCWCR-12	144.2
CCWCR-13	108.6
CCWCR-14	33.1
CCWCR-15	107.2
TOTAL =	1,258 SF

Hot Mix Asphalt Driveways	
HMADW (SF)	
HMADW-1	556.8
HMADW-2	297.6
HMADW-3	417.2
HMADW-4	341.2
HMADW-5	314.0
HMADW-6	297.4
HMADW-7	247.2
HMADW-8	506.7
HMADW-9	4739.4
TOTAL =	7,717 SF

Hot Mix Asphalt Parking Lots	
HMAPKNG (SF)	
HMAPKNG-2	8582.6
HMAPKNG-3	25977.0
TOTAL =	34,560 SF

Full Depth Hot Mix Asphalt Construction	
FDHMA (SF)	
FDHMA-1	10790.2
FDHMA-2	744.3
TOTAL =	11,534 SF

Cement Concrete Sidewalk	
CCSW (SF)	
CCSW-1	168.0
CCSW-2	172.6
CCSW-3	123.9
CCSW-4	125.3
CCSW-5	188.1
CCSW-6	94.2
CCSW-7	354.2
CCSW-8	180.3
CCSW-9	174.8
CCSW-10	939.5
CCSW-11	21.1
CCSW-12	92.4
CCSW-13	148.8
CCSW-14	100.4
CCSW-15	109.1
CCSW-16	145.2
CCSW-17	130.7
CCSW-18	38.1
CCSW-19	156.5
CCSW-20	567.7
CCSW-21	75.4
TOTAL =	4,106 SF

Clearing and Grubbing	
C&G (SF)	
C&G-1	63058.9
C&G-2	16979.4
C&G-3	108200.1
C&G-4	53103.7
C&G-5	23298.1
C&G-6	16097.0
C&G-7	48408.9
C&G-8	54733.8
C&G-9	24794.0
TOTAL =	408,674 SF

Pervious Cement Concrete Paver	
PCCP (SF)	
PCCP-1	470.3
PCCP-2	507.7
PCCP-3	4846.6
TOTAL =	5,825 SF

GPI Calculations

Greenman-Pedersen, Inc.

Location	Concord	**Job Number**	MAX-2010031 (605189)
Title	Bruce Freeman Rail Trail Phase 2C		
Calculated By		**Checked By**	

Loam and Seed	
L&S (SF)	
L&S-1	4291.3
L&S-2	1701.3
L&S-3	2004.0
L&S-4	342.5
L&S-5	497.9
L&S-6	605.6
L&S-7	2292.9
L&S-8	6074.2
L&S-9	593.8
L&S-10	3611.6
L&S-11	6147.8
L&S-12	6971.4
L&S-13	5888.8
L&S-14	2135.4
L&S-15	272.9
L&S-16	137.4
L&S-17	1811.7
L&S-18	2186.5
L&S-19	258.6
L&S-20	726.8
L&S-21	2989.6
L&S-22	199.5
L&S-23	313.9
L&S-24	1055.7
L&S-25	14.8
L&S-26	74.5
L&S-27	2454.2
L&S-28	540.3
L&S-29	2665.4
L&S-30	740.9
L&S-31	261.6
L&S-32	860.7
L&S-33	551.3
L&S-34	2579.0
L&S-35	2181.2
L&S-36	167.9
L&S-37	237.2
L&S-38	1889.5
L&S-39	1979.1
L&S-40	158.1
L&S-41	367.3
L&S-42	1195.2
L&S-43	706.7
L&S-44	23.3
L&S-45	29.2
SUBTOTAL=	72,788 SF

Loam and Seed cont.	
L&S (SF)	
L&S-46	725.2
L&S-47	408.2
L&S-48	218.8
L&S-49	33.2
L&S-50	50.3
L&S-51	126.5
L&S-52	29.1
L&S-53	57.4
L&S-54	99.9
L&S-55	227.2
L&S-56	150.9
L&S-57	164.4
L&S-58	156.9
L&S-59	25.4
L&S-60	10.9
L&S-61	283.2
L&S-62	90.8
L&S-63	14.1
L&S-64	190.4
L&S-65	215.2
L&S-66	343.7
L&S-67	48.4
L&S-68	185.5
L&S-69	111.3
L&S-70	15.9
L&S-71	70.5
L&S-72	587.9
L&S-73	175.7
L&S-74	4531.6
L&S-75	2860.8
L&S-76	68.5
L&S-77	1442.6
L&S-78	2961.1
L&S-79	1076.6
L&S-80	65.1
L&S-81	84.4
L&S-82	233.2
L&S-83	16.5
L&S-84	545.6
L&S-85	245.6
L&S-86	368.0
L&S-87	2259.9
L&S-88	1877.6
L&S-89	1075.6
L&S-90	813.6
SUBTOTAL=	25,343 SF

Loam and Seed cont.	
L&S (SF)	
L&S-91	742.4
L&S-92	1897.7
L&S-93	4569.2
L&S-94	393.4
L&S-95	167.1
L&S-96	947.7
L&S-97	830.2
L&S-98	3493.4
L&S-99	309.0
L&S-100	315.1
L&S-101	12999.7
L&S-102	819.7
L&S-103	55.5
L&S-105	640.8
L&S-106	56.0
L&S-107	52.7
L&S-108	1745.6
L&S-109	8346.9
SUBTOTAL=	38,382 SF
TOTAL =	136,514 SF

At-Grade Rail Crossing	
RRX (SF)	
RRX-1	376.0
TOTAL =	376 SF

GPI Calculations **Greenman-Pedersen, Inc.**

Location	Concord	**Job Number**	MAX-2010031 (605189)
Title	Bruce Freeman Rail Trail Phase 2C		
Calculated By		**Checked By**	

Stone Dust Shoulder	
SSHLD (SF)	
SSHLD-1	16.0
SSHLD-2	5474.7
SSHLD-3	5370.8
SSHLD-4	464.9
SSHLD-5	4540.7
SSHLD-6	6261.1
SSHLD-7	2197.4
SSHLD-8	1334.2
SSHLD-9	1273.5
SSHLD-10	1121.7
SSHLD-11	1117.8
SSHLD-12	3949.7
SSHLD-13	3999.2
SSHLD-14	1404.0
SSHLD-15	1440.2
SSHLD-16	2497.5
SSHLD-17	2461.4
SSHLD-18	360.6
SSHLD-19	1315.3
SSHLD-20	1028.7
SSHLD-21	1032.1
SSHLD-22	1034.3
SSHLD-23	430.6
SSHLD-24	357.6
SSHLD-25	3968.6
SSHLD-26	3853.2
SSHLD-27	747.9
SSHLD-28	588.6
SSHLD-29	111.9
TOTAL =	59,754 SF

GPI Calculations **Greenman-Pedersen, Inc.**

Location	Concord	**Job Number**	MAX-2010031 (605189)
Title	Bruce Freeman Rail Trail Phase 2C		
Calculated By		**Checked By**	

SURFACE AREA SUMMARY

Description	Area (sf)	Area (sy)
Hot Mix Asphalt Path	155,209 SF	17,245 SY
Pavement Milling & Overlay	29,022 SF	3,225 SY
Full Depth Hot Mix Asphalt Construction	11,534 SF	1,282 SY
Hot Mix Asphalt Walk	7,235 SF	804 SY
Cement Concrete Sidewalk	4,106 SF	456 SY
Cement Concrete Wheelchair Ramps	1,258 SF	140 SY
Pervious Cement Concrete Paver	5,825 SF	647 SY
Hot Mix Asphalt Driveways	7,717 SF	857 SY
Hot Mix Asphalt Parking Lots	34,560 SF	3,840 SY
Clearing and Grubbing	408,674 SF	45,408 SY
Stone Dust Shoulder	59,754 SF	6,639 SY
Cement Concrete Paver Splitter Islands	245 SF	27 SY
Loam and Seed	136,514 SF	15,168 SY
At-Grade Rail Crossing	376 SF	42 SY

GPI Calculations

Greenman-Pedersen, Inc.

Location	Concord	**Job Number**	MAX-2010031 (605189)
Title	Bruce Freeman Rail Trail Phase 2C		
Calculated By		**Checked By**	

Item 100. **Schedule Of Operations - Fixed Price $55500** **LS**

Estimate Total	Rounded Total
$ 7,333,666	$7,400,000.00

Price= **$ 55,500.00**

ITEM 100. - Revised Subsection 8.02 - Schedule Of Operations - LUMP SUM
Revised: 03/14/2014

NOTE:
Construction Cost of $1M or less, use $10,000
Construction Cost of $1M to $3M rounded up to nearest $0.1M
Construction cost of $3M to $10M rounded up to nearest $0.2M
Construction Cost of $10M to $50M rounded up to nearest Million
Construction Cost of $100M or more, use $300,000

Say 1 LS

GPI Calculations

Greenman-Pedersen, Inc.

Location	Concord	**Job Number**	MAX-2010031 (605189)
Title	Bruce Freeman Rail Trail Phase 2C		
Calculated By		**Checked By**	

Item 101. **Clearing And Grubbing** **A**

From Surface Areas	Area (SY)	Area (ACRE)
Clearing and Grubbing	45408.20	9.38
	Say	**9** **A**

GPI Calculations

Greenman-Pedersen, Inc.

Location Concord **Job Number** MAX-2010031 (605189)
Title Bruce Freeman Rail Trail Phase 2C
Calculated By **Checked By**

Item 102.3 **Control Of Invasive Plants Existing On Site** **HR**

Year 1 =	48	Hours
Year 2 =	32	Hours
Year 3 =	16	Hours
Total =	96	Hours

*Note - Japanese Knotweed is known to be present in the vicinity of Commonwealth Avenue, between Stations 160+00 and the end of the project.

Say 96 HR

GPI Calculations

Greenman-Pedersen, Inc.

Location	Concord	**Job Number**	MAX-2010031 (605189)
Title	Bruce Freeman Rail Trail Phase 2C		
Calculated By		**Checked By**	

Item 102.51 **Individual Tree Protection** **EA**

As Contingency

Say **50** **EA**

GPI Calculations

Greenman-Pedersen, Inc.

Location	Concord	**Job Number**	MAX-2010031 (605189)
Title	Bruce Freeman Rail Trail Phase 2C		
Calculated By		**Checked By**	

Item 102.52 **Roadside Tree Protection** **FT**

Assume 10% of the project length on each side of the trail

Project Length = 16400 ft. x 2 x 10% = 3280 ft.

Say 3,280 FT

GPI Calculations

Greenman-Pedersen, Inc.

Location Concord **Job Number** MAX-2010031 (605189)
Title Bruce Freeman Rail Trail Phase 2C
Calculated By **Checked By**

Item 103. **Tree Removed - Diameter Under 24 Inches** **EA**

Station	Side	Baseline	Quantity
129+97	LT	BFRT 2C	1
130+51	RT	BFRT 2C	1
501+25	LT	BEHARREL PARKING	1
501+47	RT	BEHARREL PARKING	2
		Total =	5
		Say	**5** **EA**

GPI Calculations

Greenman-Pedersen, Inc.

Location	Concord	**Job Number**	MAX-2010031 (605189)
Title	Bruce Freeman Rail Trail Phase 2C		
Calculated By		**Checked By**	

Item 120.1 **Unclassified Excavation** **CY**

From Earth Summary

Estimated Excavation		10526	CY
For Excavation of Pipe at Powder Mill Road	4' x 3' x 248'=	110.22	CY
	Total=	10636.07	CY
	Say	**11,000**	**CY**

GPI Calculations

Greenman-Pedersen, Inc.

Location	Concord	**Job Number**	MAX-2010031 (605189)
Title	Bruce Freeman Rail Trail Phase 2C		
Calculated By		**Checked By**	

Item 123. **Muck Excavation** **CY**

As Contingency

Say	**100**	**CY**

GPI Calculations

Greenman-Pedersen, Inc.

Location	Concord	**Job Number**	MAX-2010031 (605189)
Title	Bruce Freeman Rail Trail Phase 2C		
Calculated By		**Checked By**	

Item 129. **Pavement Milling** **SY**

From Surface Areas	Area (SY)
Pavement Milling	3224.62

Say 3,230 SY

GPI Calculations

Greenman-Pedersen, Inc.

Location Concord **Job Number** MAX-2010031 (605189)
Title Bruce Freeman Rail Trail Phase 2C
Calculated By **Checked By**

Item 129.5 **Track Excavation** **FT**

From Station	Side	Baseline	To Station	Side	Baseline		Length
1+00.00	--	BFRT 2C	27+21.39	--	BFRT 2C		2,621
31+32.27	--	BFRT 2C	75+39.91	--	BFRT 2C		4,413
76+33.15	--	BFRT 2C	103+02.45	--	BFRT 2C		2,669
132+63.89	--	BFRT 2C	159+29.44	--	BFRT 2C		2,663
132+80.77	--	BFRT 2C	135+77.94	--	BFRT 2C		279
136+92.89	--	BFRT 2C	147+10.83	--	BFRT 2C		1,014
138+17.80	--	BFRT 2C	151+12.55	--	BFRT 2C		1,293
152+97.97	--	BFRT 2C	158+00.13	--	BFRT 2C		502
160+63.89	--	BFRT 2C	164+32.13	--	BFRT 2C		372
						Total =	15,826

Say **16,000** **FT**

GPI Calculations

Greenman-Pedersen, Inc.

Location	Concord	**Job Number**	MAX-2010031 (605189)
Title	Bruce Freeman Rail Trail Phase 2C		
Calculated By		**Checked By**	

Item 129.7 **Handling and Transporting of Rail Components** **FT**

Assume two rails for the length from Item 129.5	32,000	
Say	**32,000**	**FT**

GPI Calculations

Greenman-Pedersen, Inc.

Location Concord **Job Number** MAX-2010031 (605189)
Title Bruce Freeman Rail Trail Phase 2C
Calculated By **Checked By**

Item 140. **Bridge Excavation** **CY**

From Bridge Estimate

Bridge No. C-19-015 (XXX)	2670
Bridge No. C-19-031 (XXX)	75
Say	**2,745** **CY**

GPI Calculations **Greenman-Pedersen, Inc.**

Location Concord **Job Number** MAX-2010031 (605189)
Title Bruce Freeman Rail Trail Phase 2C
Calculated By **Checked By**

Item 140.2 **Ballast Excavation** **CY**

From Bridge Estimate

Bridge No. C-19-032 (A5R)	160	
Say	**160**	**CY**

GPI Calculations

Greenman-Pedersen, Inc.

Location Concord **Job Number** MAX-2010031 (605189)
Title Bruce Freeman Rail Trail Phase 2C
Calculated By **Checked By**

Item 141. **Class A Trench Excavation** **CY**

For Low Ret. Wall Sta. 129+48 to 129+96:	0.247	CY for LF	x	51.3		=	12.671
For Stone Masonry Pipe Ends Sta. 81+00:		43.75	CF=	1.6	x2=		3.2407
				Total=			16

Say **20** **CY**

GPI Calculations

Greenman-Pedersen, Inc.

Location	Concord	**Job Number**	MAX-2010031 (605189)
Title	Bruce Freeman Rail Trail Phase 2C		
Calculated By		**Checked By**	

Item 141.1 **Test Pit For Exploration** **CY**

Assume 5'x5'x5' test pit will be required every 300' to determine suitablilty of soil for reuse.

Project Length =	16280	ft /300 ft =	55 x 4.62 CY =	254.63	CY
Plus Additional 50 CY As Contingency					
			Total =	304.63	CY
			Say	**310**	**CY**

GPI Calculations **Greenman-Pedersen, Inc.**

Location	Concord	**Job Number**	MAX-2010031 (605189)
Title	Bruce Freeman Rail Trail Phase 2C		
Calculated By		**Checked By**	

Item 144. **Class B Rock Excavation** **CY**

Assume a contingency quantity.

Say 10 CY

GPI Calculations

Greenman-Pedersen, Inc.

Location Concord **Job Number** MAX-2010031 (605189)
Title Bruce Freeman Rail Trail Phase 2C
Calculated By **Checked By**

Item 146. **Drainage Structure Removed** **EA**

Station	Side	Baseline	Quantity
125+02	LT	BFRT 2C	1
204+82	LT	Powder Mill Rd	1
204+87	RT	Powder Mill Rd	1
		Total =	3
		Say	**3** **EA**

GPI Calculations

Greenman-Pedersen, Inc.

Location Concord **Job Number** MAX-2010031 (605189)
Title Bruce Freeman Rail Trail Phase 2C
Calculated By **Checked By**

Item 150. **Ordinary Borrow** **CY**

From Earth Summary

Total
Embankment
Required: 5080 CY

Say 5,500 CY

GPI Calculations **Greenman-Pedersen, Inc.**

Location	Concord	**Job Number**	MAX-2010031 (605189)
Title	Bruce Freeman Rail Trail Phase 2C		
Calculated By		**Checked By**	

Item 150.1 **Special Borrow** **CY**

Assume a contingency quantity.

Say 500 CY

GPI Calculations

Greenman-Pedersen, Inc.

Location Concord **Job Number** MAX-2010031 (605189)
Title Bruce Freeman Rail Trail Phase 2C
Calculated By **Checked By**

Item 151. **Gravel Borrow** **CY**

Assume 5" subbase for HMA trail and stone dust shoulder

From Surface Areas	Area (sf)	Area (sy)	Depth (in)	Volume (cy)
Hot Mix Asphalt Path	155,209	17,245	5.00	2,395
Full Depth Hot Mix Asphalt Construction	11,534	1,282	8.00	285
Hot Mix Asphalt Walk	7,235	804	8.00	179
Cement Concrete Sidewalk	4,106	456	8.00	101
Cement Concrete Wheelchair Ramps	1,258	140	8.00	31
Pervious Cement Concrete Paver	5,825	647	8.00	144
Hot Mix Asphalt Driveways	7,717	857	8.00	191
Hot Mix Asphalt Parking Lots	34,560	3,840	8.00	853
Stone Dust Shoulder	59,754	6,639	5.00	922
Cement Concrete Paver Splitter Islands	245	27	8.00	6
			Total	5,107 CY
	Add 25% Swell Factor			1276.75 CY
		Final Total=		6,384 CY
	Say	**6,500**	**CY**	

GPI Calculations

Greenman-Pedersen, Inc.

Location Concord **Job Number** MAX-2010031 (605189)
Title Bruce Freeman Rail Trail Phase 2C
Calculated By **Checked By**

Item 151.1 **Gravel Borrow For Bridge Foundation** **CY**

From Bridge Estimate

Bridge No. C-19-015 (XXX)	100.00	
Say	**100**	**CY**

GPI Calculations

Greenman-Pedersen, Inc.

Location Concord **Job Number** MAX-2010031 (605189)
Title Bruce Freeman Rail Trail Phase 2C
Calculated By **Checked By**

Item 151.2 **Gravel Borrow For Backfilling Structures And Pipes** **CY**

From Bridge Estimate

Bridge No. C-19-015 (XXX)	1320.00
Bridge No. C-19-031 (XXX)	25
Say	**1,345 CY**

GPI Calculations

Greenman-Pedersen, Inc.

Location	Concord	**Job Number**	MAX-2010031 (605189)
Title	Bruce Freeman Rail Trail Phase 2C		
Calculated By		**Checked By**	

Item 156. **Crushed Stone** **TON**

As Contingency

Say **5** **TON**

GPI Calculations **Greenman-Pedersen, Inc.**

Location Concord **Job Number** MAX-2010031 (605189)
Title Bruce Freeman Rail Trail Phase 2C
Calculated By **Checked By**

Item 170. **Fine Grading And Compacting** **SY**

From Surface Areas	Area (sf)	Area (sy)
Hot Mix Asphalt Path	155,209	17,245
Full Depth Hot Mix Asphalt Construction	11,534	1,282
Hot Mix Asphalt Walk	7,235	804
Cement Concrete Sidewalk	4,106	456
Cement Concrete Wheelchair Ramps	1,258	140
Pervious Cement Concrete Paver	5,825	647
Hot Mix Asphalt Driveways	7,717	857
Hot Mix Asphalt Parking Lots	34,560	3,840
Stone Dust Shoulder	59,754	6,639
Cement Concrete Paver Splitter Islands	245	27
	Total =	31,938
	Say	**32,000** **SY**

GPI Calculations

Greenman-Pedersen, Inc.

Location	Concord	**Job Number**	MAX-2010031 (605189)
Title	Bruce Freeman Rail Trail Phase 2C		
Calculated By		**Checked By**	

Item 180.1 **Health And Safety Plan** **LS**

Say	**1**	**LS**

GPI Calculations

Greenman-Pedersen, Inc.

Location	Concord	**Job Number**	MAX-2010031 (605189)
Title	Bruce Freeman Rail Trail Phase 2C		
Calculated By		**Checked By**	

Item 180.2 **Implementation Of Health And Safety Plan** **HR**

Say 80 HR

GPI Calculations

Greenman-Pedersen, Inc.

Location	Concord	**Job Number**	MAX-2010031 (605189)
Title	Bruce Freeman Rail Trail Phase 2C		
Calculated By		**Checked By**	

Item 180.3 **Personnel Protection Level C Upgrade** **HR**

As Contingency

Say 80 HR

GPI Calculations

Greenman-Pedersen, Inc.

Location	Concord	**Job Number**	MAX-2010031 (605189)
Title	Bruce Freeman Rail Trail Phase 2C		
Calculated By		**Checked By**	

Item 180.5	**Licensed Site Professional**			**HR**
As Contingency				
	Say	**120**	**HR**	

GPI Calculations

Greenman-Pedersen, Inc.

Location	Concord	**Job Number**	MAX-2010031 (605189)
Title	Bruce Freeman Rail Trail Phase 2C		
Calculated By		**Checked By**	

Item 180.6 **Miscellaneous Soils Testing** **EA**

As Contingency

Say	**25**	**EA**

GPI Calculations

Greenman-Pedersen, Inc.

Location	Concord	**Job Number**	MAX-2010031 (605189)
Title	Bruce Freeman Rail Trail Phase 2C		
Calculated By		**Checked By**	

Item 181.11 **Disposal Of Unregulated Soil** **TON**

As Contingency

Say **400** **TON**

GPI Calculations

Greenman-Pedersen, Inc.

Location	Concord	**Job Number**	MAX-2010031 (605189)
Title	Bruce Freeman Rail Trail Phase 2C		
Calculated By		**Checked By**	

Item 181.12 **Disposal Of Regulated Soil - In-State Facility** **TON**

As Contingency

Say **175** **TON**

GPI Calculations

Greenman-Pedersen, Inc.

Location	Concord	**Job Number**	MAX-2010031 (605189)
Title	Bruce Freeman Rail Trail Phase 2C		
Calculated By		**Checked By**	

Item 181.13 **Disposal Of Regulated Soil - Out-Of-State Facility** **TON**

As Contingency

Say	**100**	**TON**

GPI Calculations

Greenman-Pedersen, Inc.

Location	Concord	**Job Number**	MAX-2010031 (605189)
Title	Bruce Freeman Rail Trail Phase 2C		
Calculated By		**Checked By**	

Item 181.14 **Disposal Of Hazardous Waste** **TON**

As Contingency

Say **1** **TON**

GPI Calculations

Greenman-Pedersen, Inc.

Location Concord **Job Number** MAX-2010031 (605189)
Title Bruce Freeman Rail Trail Phase 2C
Calculated By **Checked By**

Item 181.2 **Battery Well And Signal Box Remove And Discard** **EA**

Station	Side	Type
118+42	10.4' LT	Battery Well
160+68	5.0' LT	Battery Well
	Total =	2

Say 2 EA

GPI Calculations

Greenman-Pedersen, Inc.

Location	Concord	**Job Number**	MAX-2010031 (605189)
Title	Bruce Freeman Rail Trail Phase 2C		
Calculated By		**Checked By**	

Item 183.1 **Treatment Of Contaminated Groundwater** **GAL**

As Contingency

Say 1,000 GAL

GPI Calculations

Greenman-Pedersen, Inc.

Location	Concord	**Job Number**	MAX-2010031 (605189)
Title	Bruce Freeman Rail Trail Phase 2C		
Calculated By		**Checked By**	

Item 183.2 **Disposal Of Granular Activated Carbon** **LB**

As Contingency

Say **200** **LB**

GPI Calculations

Greenman-Pedersen, Inc.

Location Concord **Job Number** MAX-2010031 (605189)
Title Bruce Freeman Rail Trail Phase 2C
Calculated By **Checked By**

Item 184.1 **Disposal Of Treated Wood Products** **TON**

From Station	Side	Baseline	To Station	Side	Baseline	Length (ft)
1+00.00		BFRT 2C	27+21.39		BFRT 2C	2,621
31+32.27		BFRT 2C	75+39.91		BFRT 2C	4,413
76+33.15		BFRT 2C	103+02.45		BFRT 2C	2,669
132+63.89		BFRT 2C	159+29.44		BFRT 2C	2,663
132+80.77		BFRT 2C	135+77.94		BFRT 2C	279
136+92.89		BFRT 2C	147+10.83		BFRT 2C	1,014
138+17.80		BFRT 2C	151+12.55		BFRT 2C	1,293
152+97.97		BFRT 2C	158+00.13		BFRT 2C	502
160+63.89		BFRT 2C	164+32.13		BFRT 2C	372

Total Length = 15826.28 ft
# of Ties = 9043.59 ea
Say = 9100.00 ea

Total weight based on assumed weight of 200 pounds = 910.00 ton

Say **910** **TON**

GPI Calculations

Greenman-Pedersen, Inc.

Location Concord **Job Number** MAX-2010031 (605189)
Title Bruce Freeman Rail Trail Phase 2C
Calculated By **Checked By**

Item 201. **Catch Basin** **EA**

Station	Side	Baseline	Type	Quantity
75+72	LT	BFRT 2C	CBCI	1
75+79	RT	BFRT 2C	CBCI	1
103+14	LT	BFRT 2C	CB	1
103+45	RT	BFRT 2C	CB	1
124+82	LT	BFRT 2C	CBCI	1
132+58	LT	BFRT 2C	CB	1
134+23	LT	BFRT 2C	CB	1
135+86	LT	BFRT 2C	CB	1
204+82	LT	Powder Mill Rd.	CB	1
			Total =	9
			Say	**9** **EA**

GPI Calculations

Greenman-Pedersen, Inc.

Location Concord **Job Number** MAX-2010031 (605189)
Title Bruce Freeman Rail Trail Phase 2C
Calculated By **Checked By**

Item 202. **Manhole** **EA**

Station	Side	Baseline	Type	Quantity
134+27	LT	BFRT 2C	DMH	1
135+88	LT	BFRT 2C	DMH	1
136+50	RT	BFRT 2C	DMH	1
203+88	RT	Powder Mill Rd	DMH	1
204+06	RT	Powder Mill Rd	DMH	1
204+92	RT	Powder Mill Rd	DMH	1
205+32	RT	Powder Mill Rd	DMH	1
205+48	LT	Powder Mill Rd	DMH	1
			Total	8
			Say	**8** **EA**

GPI Calculations

Greenman-Pedersen, Inc.

Location Concord **Job Number** MAX-2010031 (605189)
Title Bruce Freeman Rail Trail Phase 2C
Calculated By **Checked By**

Item 204. **Gutter Inlet** **EA**

Station	Side	Baseline	Type	Quantity	
701+51	RT	Main St (Route 62)	GUTTER INLET	1	
			Total	1	
			Say	**1**	**EA**

GPI Calculations

Greenman-Pedersen, Inc.

Location Concord **Job Number** MAX-2010031 (605189)
Title Bruce Freeman Rail Trail Phase 2C
Calculated By **Checked By**

Item 205. **Leaching Basin** **EA**

Station	Side	Baseline	Type	Quantity
75+63	RT	BFRT 2C	Leaching Basin	1
75+66	LT	BFRT 2C	Leaching Basin	1
132+52	LT	BFRT 2C	Leaching Basin	1
132+52	LT	BFRT 2C	Leaching Basin	1
134+17	LT	BFRT 2C	Leaching Basin	1
134+28	LT	BFRT 2C	Leaching Basin	1
135+78	LT	BFRT 2C	Leaching Basin	1
135+94	LT	BFRT 2C	Leaching Basin	1
			Total	8
			Say	**8** **EA**

GPI Calculations

Greenman-Pedersen, Inc.

Location Concord **Job Number** MAX-2010031 (605189)
Title Bruce Freeman Rail Trail Phase 2C
Calculated By **Checked By**

Item 220. **Drainage Structure Adjusted** **EA**

Station	Side	Baseline	Type	Quantity
103+30	LT	BFRT 2C	DMH	1
103+57	LT	BFRT 2C	CB	1
124+28	LT	BFRT 2C	CB	1
124+54	LT	BFRT 2C	CB	1
124+55	LT	BFRT 2C	DMH	1
124+73	LT	BFRT 2C	CB	1
124+80	LT	BFRT 2C	DMH	1
125+30	LT	BFRT 2C	CB	1
127+06	LT	BFRT 2C	CB	1
160+56	RT	BFRT 2C	CBCI	1
160+81	RT	BFRT 2C	CB	1
			Total	11
			Say	**11** **EA**

GPI Calculations

Greenman-Pedersen, Inc.

Location	Concord	**Job Number**	MAX-2010031 (605189)
Title	Bruce Freeman Rail Trail Phase 2C		
Calculated By		**Checked By**	

Item 220.2 **Drainage Structure Rebuilt** **FT**

As Contingency: Assumed Total = 16 ft

Say **16** **FT**

GPI Calculations

Greenman-Pedersen, Inc.

Location Concord **Job Number** MAX-2010031 (605189)
Title Bruce Freeman Rail Trail Phase 2C
Calculated By **Checked By**

Item 220.3 **Drainage Structure Change In Type** **EA**

Station	Side	Baseline	Type	Quantity	
75+80	LT	BFRT 2C	CB to DMH	1	
103+39	RT	BFRT 2C	CB to DMH	1	
701+51	RT	Main St (Route 62)	CB to DMH	1	
			Total =	3	
			Say	**3**	**EA**

GPI Calculations

Greenman-Pedersen, Inc.

Location Concord **Job Number** MAX-2010031 (605189)
Title Bruce Freeman Rail Trail Phase 2C
Calculated By **Checked By**

Item 220.8 **Sanitary Structure Remodeled** **EA**

Station	Side	Baseline	Type	Quantity
124+88	LT	BFRT 2C	Manhole	1
137+81	LT	BFRT 2C	Manhole	1
			Total =	2
			Say	**2** **EA**

GPI Calculations

Greenman-Pedersen, Inc.

Location Concord **Job Number** MAX-2010031 (605189)
Title Bruce Freeman Rail Trail Phase 2C
Calculated By **Checked By**

Item 222.1 **Frame And Grate - MassDOT Cascade Type** **EA**

Station	Side	Baseline	Type	Quantity	
204+82	LT	Powder Mill Rd.	CB	1	
			Total =	1	
			Say	**1**	**EA**

GPI Calculations **Greenman-Pedersen, Inc.**

Location Concord **Job Number** MAX-2010031 (605189)
Title Bruce Freeman Rail Trail Phase 2C
Calculated By **Checked By**

Item 222.3 **Frame And Grate (Or Cover) Municipal Standard** **EA**

Station	Side	Baseline	Type	Quantity
75+63	RT	BFRT 2C	Leaching Basin	1
75+66	LT	BFRT 2C	Leaching Basin	1
75+72	LT	BFRT 2C	CBCI	1
75+79	RT	BFRT 2C	CBCI	1
75+80	LT	BFRT 2C	CB to DMH	1
103+14	LT	BFRT 2C	CB	1
103+39	RT	BFRT 2C	CB to DMH	1
103+45	RT	BFRT 2C	CB	1
124+82	LT	BFRT 2C	CBCI	1
132+52	LT	BFRT 2C	Leaching Basin	1
132+52	LT	BFRT 2C	Leaching Basin	1
132+58	LT	BFRT 2C	CB	1
134+17	LT	BFRT 2C	Leaching Basin	1
134+23	LT	BFRT 2C	CB	1
134+27	LT	BFRT 2C	DMH	1
134+28	LT	BFRT 2C	Leaching Basin	1
135+78	LT	BFRT 2C	Leaching Basin	1
135+86	LT	BFRT 2C	CB	1
135+88	LT	BFRT 2C	DMH	1
135+94	LT	BFRT 2C	Leaching Basin	1
136+50	RT	BFRT 2C	DMH	1
203+88	RT	Powder Mill Rd	DMH	1
204+06	RT	Powder Mill Rd	DMH	1
204+92	RT	Powder Mill Rd	DMH	1
205+32	RT	Powder Mill Rd	DMH	1
205+48	LT	Powder Mill Rd	DMH	1
701+51	RT	Main St (Route 62)	CB to DMH	1
			Total =	27
			Say	**27** **EA**

GPI Calculations **Greenman-Pedersen, Inc.**

Location Concord **Job Number** MAX-2010031 (605189)
Title Bruce Freeman Rail Trail Phase 2C
Calculated By **Checked By**

Item 227.4 **Masonry Plug** **SF**

For use on Removing & Adandoning Pipes on Powder Mill Rd.

4 Plugs	x	15" Pipe=	5 SF	
		Say	**10**	**SF**

GPI Calculations

Greenman-Pedersen, Inc.

Location Concord **Job Number** MAX-2010031 (605189)
Title Bruce Freeman Rail Trail Phase 2C
Calculated By **Checked By**

Item 238.1 **10 Inch Ductile Iron Pipe** **FT**

From Station	Side	Baseline	To Station	Side	Baseline	Length
75+66	LT	BFRT 2C	75+72	LT	BFRT 2C	11
96+01	LT	BFRT 2C	96+31	LT	BFRT 2C	30
96+09	RT	BFRT 2C	96+38	RT	BFRT 2C	29
124+02	RT	BFRT 2C	124+07	RT	BFRT 2C	5
132+52	LT	BFRT 2C	132+58	LT	BFRT 2C	8
132+52	LT	BFRT 2C	132+58	LT	BFRT 2C	8
134+17	LT	BFRT 2C	134+23	LT	BFRT 2C	8
134+23	LT	BFRT 2C	134+28	LT	BFRT 2C	8
135+78	LT	BFRT 2C	135+86	LT	BFRT 2C	8
135+86	LT	BFRT 2C	135+94	LT	BFRT 2C	8
141+53	LT	BFRT 2C	141+55	LT	BFRT 2C	34
					Total =	157

Say **200** **FT**

GPI Calculations

Greenman-Pedersen, Inc.

Location Concord **Job Number** MAX-2010031 (605189)
Title Bruce Freeman Rail Trail Phase 2C
Calculated By **Checked By**

Item 238.12 **12 Inch Ductile Iron Pipe** **FT**

From Station	Side	Baseline	To Station	Side	Baseline	Length
16+60	RT	BFRT 2C	16+60	RT	BFRT 2C	25
31+74	LT	BFRT 2C	31+84	LT	BFRT 2C	10
33+51	RT	BFRT 2C	33+51	RT	BFRT 2C	24
57+00	LT	BFRT 2C	57+00	LT	BFRT 2C	25
62+51	LT	BFRT 2C	62+51	LT	BFRT 2C	26
62+95	LT	BFRT 2C	63+36	LT	BFRT 2C	41
63+31	RT	BFRT 2C	63+74	RT	BFRT 2C	44
70+01	LT	BFRT 2C	70+25	LT	BFRT 2C	24
70+02	RT	BFRT 2C	70+26	RT	BFRT 2C	24
75+65	RT	BFRT 2C	75+79	RT	BFRT 2C	14
124+82	LT	BFRT 2C	125+30	LT	BFRT 2C	32
132+58	LT	BFRT 2C	134+27	LT	BFRT 2C	155
134+23	LT	BFRT 2C	134+27	LT	BFRT 2C	9
134+27	LT	BFRT 2C	135+88	LT	BFRT 2C	155
135+86	LT	BFRT 2C	135+88	LT	BFRT 2C	12
					Total =	620

Say **650** **FT**

GPI Calculations

Greenman-Pedersen, Inc.

Location Concord **Job Number** MAX-2010031 (605189)
Title Bruce Freeman Rail Trail Phase 2C
Calculated By **Checked By**

Item 241.12 **12 Inch Reinforced Concrete Pipe** **FT**

From Station	Side	Baseline	To Station	Side	Baseline	Length
75+73	LT	BFRT 2C	75+80	LT	BFRT 2C	14
75+80	RT	BFRT 2C	75+80	RT	BFRT 2C	24
103+16	RT	BFRT 2C	103+39	RT	BFRT 2C	30
103+39	RT	BFRT 2C	103+45	RT	BFRT 2C	9
134+27	LT	BFRT 2C	135+88	LT	BFRT 2C	155
204+83	RT	Powder Mill Rd	204+91	RT	Powder Mill Rd	30
					Total =	262

Say **300** **FT**

GPI Calculations

Greenman-Pedersen, Inc.

Location Concord **Job Number** MAX-2010031 (605189)
Title Bruce Freeman Rail Trail Phase 2C
Calculated By **Checked By**

Item 241.15 **15 Inch Reinforced Concrete Pipe** **FT**

From Station	Side	Baseline	To Station	Side	Baseline	Length
135+88	RT	BFRT 2C	136+49	RT	BFRT 2C	74
136+52	RT	BFRT 2C	138+89	RT	BFRT 2C	236
203+90	RT	Powder Mill Rd	204+04	RT	Powder Mill Rd	21
204+08	RT	Powder Mill Rd	204+90	RT	Powder Mill Rd	83
204+94	RT	Powder Mill Rd	205+30	RT	Powder Mill Rd	36
205+34	RT	Powder Mill Rd	205+46	RT	Powder Mill Rd	16
					Total =	466

Say **500** **FT**

GPI Calculations

Greenman-Pedersen, Inc.

Location Concord **Job Number** MAX-2010031 (605189)
Title Bruce Freeman Rail Trail Phase 2C
Calculated By **Checked By**

Item 241.3 **30 Inch Reinforced Concrete Pipe** **FT**

From Station	Side	Baseline	To Station	Side	Baseline	Length
81+01	RT	BFRT 2C	81+19	RT	BFRT 2C	41
					Total =	41
				Say	**45 FT**	

GPI Calculations

Greenman-Pedersen, Inc.

Location Concord **Job Number** MAX-2010031 (605189)
Title Bruce Freeman Rail Trail Phase 2C
Calculated By **Checked By**

Item 244.12 **12 Inch Reinforced Concrete Pipe Class V** **FT**

From Station	Side	Baseline	To Station	Side	Baseline		Length
28+41	RT	BFRT 2C	29+40	RT	BFRT 2C		99
					Total =		99
				Say	**100**	**FT**	

GPI Calculations

Greenman-Pedersen, Inc.

Location Concord **Job Number** MAX-2010031 (605189)
Title Bruce Freeman Rail Trail Phase 2C
Calculated By **Checked By**

Item 244.18 **18 Inch Reinforced Concrete Pipe Class V** **FT**

From Station	Side	Baseline	To Station	Side	Baseline		Length
28+41	LT	BFRT 2C	29+40	LT	BFRT 2C		99
					Total =		99
				Say	**100**	**FT**	

GPI Calculations

Greenman-Pedersen, Inc.

Location Concord **Job Number** MAX-2010031 (605189)
Title Bruce Freeman Rail Trail Phase 2C
Calculated By **Checked By**

Item 252.10 **10 Inch Corrugated Plastic Pipe Flared End** **EA**

Station	Side	Baseline	Quantity
63+31	RT	BFRT 2C	1
96+01	LT	BFRT 2C	1
96+09	RT	BFRT 2C	1
96+31	LT	BFRT 2C	1
96+38	RT	BFRT 2C	1
		Total =	5
		Say	**5** **EA**

GPI Calculations

Greenman-Pedersen, Inc.

Location Concord **Job Number** MAX-2010031 (605189)
Title Bruce Freeman Rail Trail Phase 2C
Calculated By **Checked By**

Item 252.112 **12 Inch Corrugated Plastic Pipe Flared End** **EA**

Station	Side	Baseline	Quantity
62+95	LT	BFRT 2C	1
63+36	LT	BFRT 2C	1
63+74	RT	BFRT 2C	1
70+01	LT	BFRT 2C	1
70+02	RT	BFRT 2C	1
70+25	LT	BFRT 2C	1
70+26	RT	BFRT 2C	1
		Total =	7
		Say	**7** **EA**

GPI Calculations

Greenman-Pedersen, Inc.

Location Concord **Job Number** MAX-2010031 (605189)
Title Bruce Freeman Rail Trail Phase 2C
Calculated By **Checked By**

Item 258. **Stone For Pipe Ends** **SY**

Outfall at Nashoba Brook: Sta. 139+00

Area= 30 SF
= 3 CY

Say **4** **SY**

GPI Calculations

Greenman-Pedersen, Inc.

Location Concord **Job Number** MAX-2010031 (605189)
Title Bruce Freeman Rail Trail Phase 2C
Calculated By **Checked By**

Item 269.06 **6 Inch Slot-Perforated Corrugated Plastic Pipe (Subdrain)** **FT**

From Station	Side	Baseline	To Station	Side	Baseline	Length
135+37	LT	BFRT 2C	135+88	LT	BFRT 2C	49
					Total =	49
				Say	**50**	**FT**

GPI Calculations

Greenman-Pedersen, Inc.

Location	Concord	**Job Number**	MAX-2010031 (605189)
Title	Bruce Freeman Rail Trail Phase 2C		
Calculated By		**Checked By**	

Item 290.1	**Infiltration Basin**				**LS**
		Say	**1**	**LS**	

GPI Calculations

Greenman-Pedersen, Inc.

Location	Concord	**Job Number**	MAX-2010031 (605189)
Title	Bruce Freeman Rail Trail Phase 2C		
Calculated By		**Checked By**	

Item 295.01	**Bioretention Basin**				**LS**
		Say	**1**	**LS**	

GPI Calculations

Greenman-Pedersen, Inc.

Location Concord **Job Number** MAX-2010031 (605189)
Title Bruce Freeman Rail Trail Phase 2C
Calculated By _____ **Checked By** _____

Item 303.06 **6 Inch Ductile Iron Water Pipe (Mechanical Joint)** **FT**

From Station	Side	Baseline	To Station	Side	Baseline		Length
125+60	LT	BFRT 2C	125+65	LT	BFRT 2C		6
						Total =	6
				Say	**6**	**FT**	

GPI Calculations

Greenman-Pedersen, Inc.

Location Concord **Job Number** MAX-2010031 (605189)
Title Bruce Freeman Rail Trail Phase 2C
Calculated By _____ **Checked By** _____

Item 303.12 **12 Inch Ductile Iron Water Pipe (Mechanical Joint)** **FT**

From Station	Side	Baseline	To Station	Side	Baseline		Length
28+64	LT	BFRT 2C	28+83	LT	BFRT 2C		231
						Total =	231
				Say	**250**	**FT**	

GPI Calculations

Greenman-Pedersen, Inc.

Location Concord **Job Number** MAX-2010031 (605189)
Title Bruce Freeman Rail Trail Phase 2C
Calculated By _____ **Checked By** _____

Item 309. **Ductile Iron Fittings For Water Pipe** **LB**

Baseline	Station	Offset Side	Type	Weight
PowderMill Rd	203+72	LT	45 degree bend - 12"	251
PowderMill Rd	204+04	RT	45 degree bend - 12"	251
PowderMill Rd	205+33	RT	45 degree bend - 12"	251
PowderMill Rd	205+60	LT	45 degree bend - 12"	251

Total = 1004.00

Say 1,100 LB

GPI Calculations

Greenman-Pedersen, Inc.

Location Concord **Job Number** MAX-2010031 (605189)
Title Bruce Freeman Rail Trail Phase 2C
Calculated By **Checked By**

Item 325.14 **14 Inch Steel Pipe Casing For Water Pipe** **FT**

From Station	Side	Baseline	To Station	Side	Baseline		Length
133+09	RT	BFRT 2C	133+37	RT	BFRT 2C		66
						Total =	66
				Say	**70**	**FT**	

GPI Calculations

Greenman-Pedersen, Inc.

Location Concord **Job Number** MAX-2010031 (605189)
Title Bruce Freeman Rail Trail Phase 2C
Calculated By **Checked By**

Item 358. **Gate Box Adjusted** **EA**

Station	Side	Baseline		Quantity	
76+14	RT	BFRT 2C		1	
76+19	RT	BFRT 2C		1	
123+42	RT	BFRT 2C		1	
124+96	LT	BFRT 2C		1	
125+01	LT	BFRT 2C		1	
125+03	RT	BFRT 2C		1	
135+92	LT	BFRT 2C		1	
			Total=	7	
			Say	**7**	**EA**

GPI Calculations

Greenman-Pedersen, Inc.

Location Concord **Job Number** MAX-2010031 (605189)
Title Bruce Freeman Rail Trail Phase 2C
Calculated By _____ **Checked By** _____

Item 358.1 **Gate Box Removed And Stacked** **EA**

Station	Side	Baseline		Quantity	
125+60	LT	BFRT 2C		1	
			Total=	1	
			Say	**1**	**EA**

GPI Calculations

Greenman-Pedersen, Inc.

Location Concord **Job Number** MAX-2010031 (605189)
Title Bruce Freeman Rail Trail Phase 2C
Calculated By **Checked By**

Item 370.4 **12 X 6 Inch Tapping Sleeve, Valve And Box** **EA**

Station	Side	Baseline		Quantity	
125+62	LT	BFRT 2C		1	
			Total=	1	
			Say	**1**	**EA**

GPI Calculations

Greenman-Pedersen, Inc.

Location Concord **Job Number** MAX-2010031 (605189)
Title Bruce Freeman Rail Trail Phase 2C
Calculated By **Checked By**

Item 371.12 **12 Inch Coupling** **EA**

Station	Side	Baseline		Quantity	
28+64	RT	BFRT 2C		1	
28+83	LT	BFRT 2C		1	
			Total=	2	
			Say	**2**	**EA**

GPI Calculations

Greenman-Pedersen, Inc.

Location Concord **Job Number** MAX-2010031 (605189)
Title Bruce Freeman Rail Trail Phase 2C
Calculated By **Checked By**

Item 376.2 **Hydrant - Removed And Reset** **EA**

Station	Side	Baseline		Quantity	
125+62	LT	BFRT 2C		1	
			Total=	1	
			Say	**1**	**EA**

GPI Calculations

Greenman-Pedersen, Inc.

Location Concord **Job Number** MAX-2010031 (605189)
Title Bruce Freeman Rail Trail Phase 2C
Calculated By **Checked By**

Item 381.3 **Service Box Adjusted** **EA**

Station	Side	Baseline		Quantity	
127+06	LT	BFRT 2C		1	
			Total =	1	
			Say	**1**	**EA**

GPI Calculations

Greenman-Pedersen, Inc.

Location Concord **Job Number** MAX-2010031 (605189)
Title Bruce Freeman Rail Trail Phase 2C
Calculated By **Checked By**

Item 390.01 **Remove Water Faucet** **LS**

Station	Side	Baseline		Quantity	
124+66	LT	BFRT 2C		1	
			Total =	1	
			Say	**1**	**LS**

GPI Calculations

Greenman-Pedersen, Inc.

Location Concord **Job Number** MAX-2010031 (605189)
Title Bruce Freeman Rail Trail Phase 2C
Calculated By **Checked By**

Item 402. **Dense Graded Crushed Stone For Sub-Base** **CY**

From Surface Areas	Area (SY)	Depth (IN)	Volume (CY)
Full Depth Hot Mix Asphalt Construction	1281.61	4	142
	Say	**150**	**CY**

GPI Calculations **Greenman-Pedersen, Inc.**

Location Concord **Job Number** MAX-2010031 (605189)
Title Bruce Freeman Rail Trail Phase 2C
Calculated By **Checked By**

Item 440. **Calcium Chloride For Roadway Dust Control** **LB**

Applied at a rate of 1.5 lb/sy in areas of Full Depth Construction

From Surface Areas	Area (SY)		Weight (LB)
Hot Mix Asphalt Path	17,245		25868.10
Full Depth Hot Mix Asphalt Construction	1,282		1922.41
Hot Mix Asphalt Walk	804		1205.80
Cement Concrete Sidewalk	456		684.39
Cement Concrete Wheelchair Ramps	140		209.74
Pervious Cement Concrete Paver	647		970.77
Hot Mix Asphalt Driveways	857		1286.23
Hot Mix Asphalt Parking Lots	3,840		5759.94
Stone Dust Shoulder	6,639		9959.00
Cement Concrete Paver Splitter Islands	27		40.90
		Total	47907.3
	Say	**48,000**	**LB**

GPI Calculations

Greenman-Pedersen, Inc.

Location Concord **Job Number** MAX-2010031 (605189)
Title Bruce Freeman Rail Trail Phase 2C
Calculated By **Checked By**

Item 443. **Water For Roadway Dust Control** **MGL**

Assume 3 applications applied at a rate of 1GAL/SY in areas of Full Depth Construction

From Surface Areas	Area (SY)	Volume (GAL)	Volume (MGL)
Hot Mix Asphalt Path	17,245.40	51,736	51.7
Full Depth Hot Mix Asphalt Construction	1,281.61	3,845	3.8
Hot Mix Asphalt Walk	803.87	2,412	2.4
Cement Concrete Sidewalk	456.26	1,369	1.4
Cement Concrete Wheelchair Ramps	139.83	419	0.4
Pervious Cement Concrete Paver	647	1,942	1.9
Hot Mix Asphalt Driveways	857.48	2,572	2.6
Hot Mix Asphalt Parking Lots	3,839.96	11,520	11.5
Stone Dust Shoulder	6,639.33	19,918	19.9
Cement Concrete Paver Splitter Islands	27.27	82	0.1
		Total	95.8
	Say	**100**	**MGL**

GPI Calculations **Greenman-Pedersen, Inc.**

Location Concord **Job Number** MAX-2010031 (605189)
Title Bruce Freeman Rail Trail Phase 2C
Calculated By **Checked By**

Item 450.9 **Contractor Quality Control** **TON**

For use with all Superpave Items

Item 455.22	1,900	Ton
Item 455.32	3,200	Ton
Item 455.42	260	
Item 455.61	20	
Item 455.71	25	
Total=	5100.00	Ton

Say 5,100 TON

GPI Calculations **Greenman-Pedersen, Inc.**

Location Concord **Job Number** MAX-2010031 (605189)
Title Bruce Freeman Rail Trail Phase 2C
Calculated By **Checked By**

Item 451. **HMA For Patching** **TON**

For use where trenches will be part of the permanent roadway surface.

As Contingency

Say 20 TON

GPI Calculations

Greenman-Pedersen, Inc.

Location Concord **Job Number** MAX-2010031 (605189)
Title Bruce Freeman Rail Trail Phase 2C
Calculated By **Checked By**

Item 452. **Asphalt Emulsion For Tack Coat** **GAL**

Use 0.05 Gal/SY for new pavement, 0.07 Gal/SY for milled surfaces

From Surface Areas	Area (sf)	Area (sy)	Layers	Volume (GAL)
Hot Mix Asphalt Path	155208.61	17245.40	1	862.27
Pavement Milling & Overlay	29021.57	3224.62	1	225.72
Full Depth Hot Mix Asphalt Construction	11534.48	1281.61	2	128.16
Hot Mix Asphalt Driveways	7717.36	857.48	1	42.87
Hot Mix Asphalt Parking Lots	34559.65	3839.96	1	192.00
Hot Mix Asphalt at Grade Crossing	234.00	26.00	2	2.60
			Total	1453.63

Say **1,460** **GAL**

GPI Calculations **Greenman-Pedersen, Inc.**

Location Concord **Job Number** MAX-2010031 (605189)
Title Bruce Freeman Rail Trail Phase 2C
Calculated By **Checked By**

Item 453. **HMA Joint Sealant** **FT**

For use between HMA mats and at cold joint between new and existing HMA.
Assume path pavement placed in two layers, each one pass.

Location	# of Joints	Length
Powder Mill Road Full Depth Limits	2	54
Driveway Crossing @ Sta. 63+00	2	72
Driveway Crossing @ Sta. 70+00	2	29
Mill & Overlay Limits on Williams Rd.	2	119
Driveway Crossing @ Sta. 90+00	2	23
Mill & Overlay Limits on Old Marlboro Rd.	2	54
Mill & Overlay Limits on Main St.	5	200
Full Depth Limits on Main St.	1	86
Mill & Overlay Limits on Comm. Ave	2	78
At Limits of Path Through W. Concord Center Parking Lot	2	373
At Beharrell Parking Lot	1	450
At MBTA Parking Lot Extention	1	51
Mill & Overlay Limits on Comm. Ave	3	107
At Comm. Ave Parking Lot Connection to Comm. Ave	1	64
Comm. Ave Parking Lot	2	200
	SubTotal=	1960

For use along each edge of proposed grade crossing

Inbound Track	12.00	2	24.00
Outbound Track	12.00	2	24.00
		Subtotal=	48.00
		Total=	2008
		Say	**2,500** **FT**

GPI Calculations

Greenman-Pedersen, Inc.

Location Concord **Job Number** MAX-2010031 (605189)
Title Bruce Freeman Rail Trail Phase 2C
Calculated By **Checked By**

Item 455.22 **Superpave Surface Course – 9.5 (SSC – 9.5)** **TON**

From Surface Areas	Area (sf)	Area (sy)	Depth (in)	Weight (TON)
Hot Mix Asphalt Path	155208.61	17245.40	1.5	1448.61
Pavement Milling & Overlay	29021.57	3224.62	1.5	270.87
Full Depth Hot Mix Asphalt Construction	11534.48	1281.61	1.5	107.66
Hot Mix Grade Crossing Area	234.00	26.00	6	8.74
			Total	1835.87

Say **1,900** **TON**

GPI Calculations

Greenman-Pedersen, Inc.

Location Concord **Job Number** MAX-2010031 (605189)
Title Bruce Freeman Rail Trail Phase 2C
Calculated By **Checked By**

Item 455.32 **Superpave Intermediate Course - 19.0 (SIC - 19.0)** **TON**

From Surface Areas	Area(SF)	Area (SY)	Depth (IN)	Weight (TON)
Hot Mix Asphalt Path	155208.61	17245.40	2.5	2414.36
Full Depth Hot Mix Asphalt Construction	11534.48	1281.61	2.5	179.43
Hot Mix Asphalt Driveways	7717.36	857.48	2	96.04
Hot Mix Asphalt Parking Lots	34559.65	3839.96	2	430.08
Hot Mix Grade Crossing Area	234.00	26.00	2	2.91
			Total	3122.81

Say **3,200** **TON**

GPI Calculations

Greenman-Pedersen, Inc.

Location Concord **Job Number** MAX-2010031 (605189)
Title Bruce Freeman Rail Trail Phase 2C
Calculated By **Checked By**

Item 455.42 **Superpave Base Course - 37.5 (SBC - 37.5)** **TON**

From Surface Areas	Area (SF)	Area (SY)	Depth (IN)		Weight (TON)
Full Depth Hot Mix Asphalt Construction	11534.48	1281.61	3.5		251.20
				Total	251.20
		Say	**260**	**TON**	

GPI Calculations

Greenman-Pedersen, Inc.

Location Concord **Job Number** MAX-2010031 (605189)
Title Bruce Freeman Rail Trail Phase 2C
Calculated By **Checked By**

Item 455.61 **Superpave Bridge Surface Course - 12.5 (SSC-B - 12.5)** **TON**

From Bridge Estimate

Bridge No. C-19-031 (XXX)	9	
Bridge No. C-19-032 (A5R)	10	
Say	**20**	**TON**

GPI Calculations

Greenman-Pedersen, Inc.

Location Concord **Job Number** MAX-2010031 (605189)
Title Bruce Freeman Rail Trail Phase 2C
Calculated By **Checked By**

Item 455.71 **Superpave Bridge Protective Course – 12.5 (SPC-B - 12.5)** **TON**

From Bridge Estimate

Bridge No. C-19-031 (XXX)	11	
Bridge No. C-19-032 (A5R)	10	
Say	**25**	**TON**

GPI Calculations **Greenman-Pedersen, Inc.**

Location Concord **Job Number** MAX-2010031 (605189)
Title Bruce Freeman Rail Trail Phase 2C
Calculated By **Checked By**

Item 456. **Warm-Mix Asphalt Pavement** **TON**

For use with all Superpave Items

From Item 455.22		1,900	Ton
From Item 455.32		3,200	Ton
From Item 455.61		20	Ton
From Item 455.71		25	Ton
	Total=	5100.00	Ton
		Say **5,100**	**TON**

GPI Calculations

Greenman-Pedersen, Inc.

Location Concord **Job Number** MAX-2010031 (605189)
Title Bruce Freeman Rail Trail Phase 2C
Calculated By **Checked By**

Item 458.61 **Railroad Ballast** **TON**

For use at Rail-Highway Crossing

Say **10** **TON**

GPI Calculations **Greenman-Pedersen, Inc.**

Location Concord **Job Number** MAX-2010031 (605189)
Title Bruce Freeman Rail Trail Phase 2C
Calculated By **Checked By**

Item 472. **Hot Mix Asphalt For Miscellaneous Work** **TON**

To be used for temporary driveways and temporary trenches

As Contingency

Say	**20**	**TON**

GPI Calculations

Greenman-Pedersen, Inc.

Location Concord **Job Number** MAX-2010031 (605189)
Title Bruce Freeman Rail Trail Phase 2C
Calculated By **Checked By**

Item 482.3 **Sawcutting Asphalt Pavement** **FT**

From Station	Side	Baseline	To Station	Side	Baseline	Length
75+71	RT	BFRT 2C	75+79	RT	BFRT 2C	57
76+12	LT	BFRT 2C	76+29	LT	BFRT 2C	35
103+10	RT	BFRT 2C	103+49	RT	BFRT 2C	61
103+54	RT	BFRT 2C	103+86	RT	BFRT 2C	46
123+14	RT	BFRT 2C	123+21	RT	BFRT 2C	53
126+65	RT	BFRT 2C	128+04	RT	BFRT 2C	132
126+75	LT	BFRT 2C	129+06	LT	BFRT 2C	241
130+61	LT	BFRT 2C	130+62	LT	BFRT 2C	23
131+21	RT	BFRT 2C	131+24	RT	BFRT 2C	81
135+88	RT	BFRT 2C	135+93	RT	BFRT 2C	51
159+44	RT	BFRT 2C	160+04	RT	BFRT 2C	95
159+90	RT	BFRT 2C	161+57	RT	BFRT 2C	204
700+43	RT	Main St (Rt 62)	700+96	RT	Main St (Rt 62)	84
701+23	RT	Main St (Rt 62)	703+53	RT	Main St (Rt 62)	278
702+47	LT	Main St (Rt 62)	703+53	LT	Main St (Rt 62)	105
800+16	RT	Comm. Ave	801+08	RT	Comm. Ave	114
					Total =	1659

Say **2,000** **FT**

GPI Calculations **Greenman-Pedersen, Inc.**

Location Concord **Job Number** MAX-2010031 (605189)
Title Bruce Freeman Rail Trail Phase 2C
Calculated By **Checked By**

Item 490.001 **Rail-Highway Crossing (AARDOT XXX-XXXX)** **LS**

Rubberized and Paved Grade Crossing for both Inbound and Outbound Tracks at West Concord Station

Item	Unit	Quantity	Unit Cost	Total Cost
Remove Existing 7"x9"x8'-6" Ties	EA	50.00	$ 10.00	$ 500.00
Install New 7"x9"x8'-6" Ties	EA	20.00	$ 175.00	$ 3,500.00
Install New 7"x9"x9'-0" Ties	EA	30.00	$ 200.00	$ 6,000.00
#132 Tie Plates	EA	100.00	$ 16.40	$ 1,640.00
#132 Tie Pads	EA	100.00	$ 5.27	$ 527.00
Rail Anchors (Drive on 6" Base)	EA	200.00	$ 2.25	$ 450.00
5/8" x 6 1/2" Track Spikes	KEG	3.00	$ 82.00	$ 246.00
Rubberised Panels - Full Depth Guage Panels with Railseal on Both Field Sides	TF	24.00	$ 350.00	$ 8,400.00
Labor and Equipment	LS	1.00	$10,000.00	$ 10,000.00
				$ 31,263.00

As Contingency

Say **1** **LS**

GPI Calculations

Greenman-Pedersen, Inc.

Location Concord **Job Number** MAX-2010031 (605189)
Title Bruce Freeman Rail Trail Phase 2C
Calculated By _____ **Checked By** _____

Item 506. **Granite Curb Type VB - Straight** **FT**

From Station	Side	Baseline	To Station	Side	Baseline	Length
124+26	LT	BFRT 2C	124+27	LT	BFRT 2C	4
124+86	LT	BFRT 2C	125+25	LT	BFRT 2C	35
124+89	RT	BFRT 2C	125+21	RT	BFRT 2C	31
125+56	LT	BFRT 2C	125+63	LT	BFRT 2C	8
131+20	LT	BFRT 2C	131+20	LT	BFRT 2C	9
131+32	LT	BFRT 2C	135+91	LT	BFRT 2C	474
131+34	LT	BFRT 2C	136+28	LT	BFRT 2C	455
133+24	RT	BFRT 2C	133+28	RT	BFRT 2C	14
135+89	RT	BFRT 2C	135+90	RT	BFRT 2C	8
135+94	RT	BFRT 2C	135+94	RT	BFRT 2C	9
135+95	RT	BFRT 2C	136+23	RT	BFRT 2C	28
135+96	LT	BFRT 2C	136+23	LT	BFRT 2C	27
135+98	RT	BFRT 2C	136+25	RT	BFRT 2C	27
136+28	LT	BFRT 2C	136+30	LT	BFRT 2C	4
136+45	RT	BFRT 2C	138+41	RT	BFRT 2C	224
136+69	RT	BFRT 2C	138+18	RT	BFRT 2C	149
138+26	RT	BFRT 2C	138+39	RT	BFRT 2C	17
160+18	RT	BFRT 2C	160+97	RT	BFRT 2C	86
202+34	RT	Powder Mill Rd	206+96	RT	Powder Mill Rd	462
					SubTotal =	2071
					Less Item 514.x 6'=	24
					Less Item 580=	198
					Total=	1849
				Say	**2,000**	**FT**

GPI Calculations

Greenman-Pedersen, Inc.

Location Concord **Job Number** MAX-2010031 (605189)
Title Bruce Freeman Rail Trail Phase 2C
Calculated By **Checked By**

Item 506.1 **Granite Curb Type VB - Curved** **FT**

From Station	Side	Baseline	To Station	Side	Baseline	Length
124+75	LT	BFRT 2C	124+75	LT	BFRT 2C	4
124+79	LT	BFRT 2C	124+81	LT	BFRT 2C	6
124+81	LT	BFRT 2C	124+86	LT	BFRT 2C	8
124+87	RT	BFRT 2C	124+89	RT	BFRT 2C	6
124+95	LT	BFRT 2C	125+44	LT	BFRT 2C	19
131+20	LT	BFRT 2C	131+28	LT	BFRT 2C	31
131+21	LT	BFRT 2C	131+21	LT	BFRT 2C	1
131+21	LT	BFRT 2C	131+25	LT	BFRT 2C	27
131+25	LT	BFRT 2C	131+34	LT	BFRT 2C	39
131+28	LT	BFRT 2C	131+31	LT	BFRT 2C	8
131+31	LT	BFRT 2C	131+32	LT	BFRT 2C	6
131+32	LT	BFRT 2C	135+91	LT	BFRT 2C	474
131+34	LT	BFRT 2C	136+28	LT	BFRT 2C	455
135+90	RT	BFRT 2C	135+95	RT	BFRT 2C	8
135+91	LT	BFRT 2C	135+96	LT	BFRT 2C	8
135+94	RT	BFRT 2C	135+98	RT	BFRT 2C	8
135+96	LT	BFRT 2C	136+23	LT	BFRT 2C	27
136+23	LT	BFRT 2C	136+32	LT	BFRT 2C	10
136+23	RT	BFRT 2C	136+35	RT	BFRT 2C	15
136+25	RT	BFRT 2C	136+45	RT	BFRT 2C	23
136+28	LT	BFRT 2C	136+30	LT	BFRT 2C	4
136+32	LT	BFRT 2C	136+37	LT	BFRT 2C	7
136+35	RT	BFRT 2C	136+38	RT	BFRT 2C	7
136+59	LT	BFRT 2C	136+60	LT	BFRT 2C	11
136+60	LT	BFRT 2C	136+63	LT	BFRT 2C	10
136+63	RT	BFRT 2C	136+69	RT	BFRT 2C	8
138+18	RT	BFRT 2C	138+26	RT	BFRT 2C	8
159+44	LT	BFRT 2C	159+56	LT	BFRT 2C	10
700+84	RT	Main St (Rt 62)	700+89	RT	Main St (Rt 62)	9
701+23	RT	Main St (Rt 62)	701+29	RT	Main St (Rt 62)	22
					Total =	1279

Say **1,500** **FT**

GPI Calculations

Greenman-Pedersen, Inc.

Location Concord **Job Number** MAX-2010031 (605189)
Title Bruce Freeman Rail Trail Phase 2C
Calculated By **Checked By**

Item 509. **Granite Transition Curb For Wheelchair Ramps - Straight** **FT**

From Station	Side	Baseline	To Station	Side	Baseline	Length
76+10	RT	BFRT 2C	76+16	RT	BFRT 2C	13
103+54	LT	BFRT 2C	103+61	LT	BFRT 2C	11
103+77	RT	BFRT 2C	103+86	RT	BFRT 2C	11
124+03	RT	BFRT 2C	124+05	RT	BFRT 2C	3
125+56	LT	BFRT 2C	127+04	LT	BFRT 2C	14
130+61	RT	BFRT 2C	130+62	RT	BFRT 2C	7
130+62	LT	BFRT 2C	130+62	LT	BFRT 2C	6
159+56	LT	BFRT 2C	159+64	LT	BFRT 2C	10
159+91	LT	BFRT 2C	159+99	LT	BFRT 2C	16
160+09	RT	BFRT 2C	160+18	RT	BFRT 2C	13
160+18	RT	BFRT 2C	160+97	RT	BFRT 2C	86
160+97	RT	BFRT 2C	160+99	RT	BFRT 2C	2
700+56	LT	Main St (Rt 62)	700+69	LT	Main St (Rt 62)	14
700+66	RT	Main St (Rt 62)	700+73	RT	Main St (Rt 62)	7
700+74	LT	Main St (Rt 62)	700+88	LT	Main St (Rt 62)	14
702+47	LT	Main St (Rt 62)	702+56	LT	Main St (Rt 62)	8
703+16	LT	Main St (Rt 62)	703+23	LT	Main St (Rt 62)	6
703+34	LT	Main St (Rt 62)	703+50	LT	Main St (Rt 62)	15
					Total =	256

Say **300** **FT**

GPI Calculations

Greenman-Pedersen, Inc.

Location Concord **Job Number** MAX-2010031 (605189)
Title Bruce Freeman Rail Trail Phase 2C
Calculated By **Checked By**

Item 509.1 **Granite Transition Curb For Wheelchair Ramps - Curved** **FT**

From Station	Side	Baseline	To Station	Side	Baseline	Length
75+71	LT	BFRT 2C	75+78	LT	BFRT 2C	18
75+79	RT	BFRT 2C	75+80	RT	BFRT 2C	13
76+28	LT	BFRT 2C	76+39	LT	BFRT 2C	15
124+75	LT	BFRT 2C	124+75	LT	BFRT 2C	4
124+75	LT	BFRT 2C	124+76	LT	BFRT 2C	5
124+76	LT	BFRT 2C	124+79	LT	BFRT 2C	9
124+79	RT	BFRT 2C	124+82	RT	BFRT 2C	7
124+81	LT	BFRT 2C	124+86	LT	BFRT 2C	8
127+00	LT	BFRT 2C	127+00	LT	BFRT 2C	6
127+00	LT	BFRT 2C	127+01	LT	BFRT 2C	11
136+32	LT	BFRT 2C	136+37	LT	BFRT 2C	7
136+35	RT	BFRT 2C	136+38	RT	BFRT 2C	7
136+60	LT	BFRT 2C	136+63	LT	BFRT 2C	10
136+63	RT	BFRT 2C	136+69	RT	BFRT 2C	8
160+99	RT	BFRT 2C	161+03	RT	BFRT 2C	5
161+50	RT	BFRT 2C	161+53	RT	BFRT 2C	4
701+34	RT	Main St (Rt 62)	701+42	RT	Main St (Rt 62)	8
					Total =	145

Say **150** **FT**

GPI Calculations

Greenman-Pedersen, Inc.

Location Concord **Job Number** MAX-2010031 (605189)
Title Bruce Freeman Rail Trail Phase 2C
Calculated By **Checked By**

Item 511.1 **Granite Edging Type SB - Straight** **FT**

From Station	Side	Baseline	To Station	Side	Baseline	Length
75+68	RT	BFRT 2C	75+79	RT	BFRT 2C	10
75+68	LT	BFRT 2C	75+78	LT	BFRT 2C	10
75+79	RT	BFRT 2C	75+80	RT	BFRT 2C	3
76+21	LT	BFRT 2C	76+23	LT	BFRT 2C	4
76+22	RT	BFRT 2C	76+33	RT	BFRT 2C	11
76+24	LT	BFRT 2C	76+33	LT	BFRT 2C	9
103+21	LT	BFRT 2C	103+29	LT	BFRT 2C	8
103+21	RT	BFRT 2C	103+31	RT	BFRT 2C	10
103+29	RT	BFRT 2C	103+32	RT	BFRT 2C	3
103+69	RT	BFRT 2C	103+72	RT	BFRT 2C	4
103+70	RT	BFRT 2C	103+72	RT	BFRT 2C	14
103+83	RT	BFRT 2C	103+83	RT	BFRT 2C	6
136+30	LT	BFRT 2C	136+38	LT	BFRT 2C	8
136+30	RT	BFRT 2C	136+38	RT	BFRT 2C	8
136+39	RT	BFRT 2C	136+39	RT	BFRT 2C	3
136+63	LT	BFRT 2C	136+63	LT	BFRT 2C	1
136+63	RT	BFRT 2C	136+63	RT	BFRT 2C	2
136+64	LT	BFRT 2C	136+72	LT	BFRT 2C	8
136+64	RT	BFRT 2C	136+72	RT	BFRT 2C	8
159+60	RT	BFRT 2C	159+60	RT	BFRT 2C	7
159+68	RT	BFRT 2C	159+70	RT	BFRT 2C	7
159+69	RT	BFRT 2C	159+71	RT	BFRT 2C	2
160+03	RT	BFRT 2C	160+05	RT	BFRT 2C	3
160+04	RT	BFRT 2C	160+06	RT	BFRT 2C	8
160+16	RT	BFRT 2C	160+16	RT	BFRT 2C	9
					Total =	166

Say **200** **FT**

GPI Calculations

Greenman-Pedersen, Inc.

Location Concord **Job Number** MAX-2010031 (605189)
Title Bruce Freeman Rail Trail Phase 2C
Calculated By **Checked By**

Item 512.1 **Granite Edging Type SB (Radius 10 Feet Or Less)** **FT**

From Station	Side	Baseline	To Station	Side	Baseline	Length
75+68	LT	BFRT 2C	75+68	LT	BFRT 2C	3
75+78	LT	BFRT 2C	75+79	LT	BFRT 2C	2
75+79	RT	BFRT 2C	75+80	RT	BFRT 2C	2
76+21	RT	BFRT 2C	76+22	RT	BFRT 2C	2
76+23	LT	BFRT 2C	76+24	LT	BFRT 2C	1
76+33	RT	BFRT 2C	76+33	RT	BFRT 2C	3
103+21	RT	BFRT 2C	103+21	RT	BFRT 2C	3
103+29	LT	BFRT 2C	103+29	LT	BFRT 2C	1
103+31	RT	BFRT 2C	103+32	RT	BFRT 2C	2
103+69	LT	BFRT 2C	103+70	LT	BFRT 2C	2
103+72	RT	BFRT 2C	103+72	RT	BFRT 2C	1
103+83	RT	BFRT 2C	103+83	RT	BFRT 2C	3
136+30	RT	BFRT 2C	136+30	RT	BFRT 2C	3
136+38	LT	BFRT 2C	136+39	LT	BFRT 2C	2
136+38	RT	BFRT 2C	136+39	RT	BFRT 2C	2
136+63	LT	BFRT 2C	136+64	LT	BFRT 2C	2
136+63	RT	BFRT 2C	136+64	RT	BFRT 2C	2
136+72	LT	BFRT 2C	136+72	LT	BFRT 2C	3
159+60	RT	BFRT 2C	159+60	RT	BFRT 2C	3
159+68	LT	BFRT 2C	159+69	LT	BFRT 2C	2
159+70	RT	BFRT 2C	159+71	RT	BFRT 2C	2
160+03	LT	BFRT 2C	160+04	LT	BFRT 2C	2
160+05	RT	BFRT 2C	160+06	RT	BFRT 2C	1
160+16	RT	BFRT 2C	160+16	RT	BFRT 2C	3
					Total =	52

Say **55** **FT**

GPI Calculations

Greenman-Pedersen, Inc.

Location Concord **Job Number** MAX-2010031 (605189)
Title Bruce Freeman Rail Trail Phase 2C
Calculated By **Checked By**

Item 514. **Granite Curb Inlet - Straight** **EA**

Station	Side	Baseline		Quantity	
75+72	LT	BFRT 2C		1	
75+79	RT	BFRT 2C		1	
124+08	RT	BFRT 2C		1	
701+52	RT	Main St (Rt 62)		1	
			Total =	4	
			Say	**4**	**EA**

GPI Calculations

Greenman-Pedersen, Inc.

Location Concord **Job Number** MAX-2010031 (605189)
Title Bruce Freeman Rail Trail Phase 2C
Calculated By **Checked By**

Item 580. **Curb Removed And Reset** **FT**

From Station	Side	Baseline	To Station	Side	Baseline	Length
700+44	RT	Main St (Rt 62)	700+66	RT	Main St (Rt 62)	22
700+89	RT	Main St (Rt 62)	700+95	RT	Main St (Rt 62)	25
701+45	RT	Main St (Rt 62)	703+08	RT	Main St (Rt 62)	175
702+71	LT	Main St (Rt 62)	703+16	LT	Main St (Rt 62)	42
					SubTotal =	264

Assume 75% can be reused the rest to be dicarded

To be R&R'd= 198
To be dicarded= 66

Say 200 FT

GPI Calculations

Greenman-Pedersen, Inc.

Location Concord **Job Number** MAX-2010031 (605189)
Title Bruce Freeman Rail Trail Phase 2C
Calculated By _____ **Checked By** _____

Item 594. **Curb Removed And Discarded** **FT**

From Station	Side	Baseline	To Station	Side	Baseline	Length
75+70	LT	BFRT 2C	75+74	LT	BFRT 2C	9
75+77	RT	BFRT 2C	75+78	RT	BFRT 2C	30
76+10	RT	BFRT 2C	76+21	RT	BFRT 2C	21
76+25	LT	BFRT 2C	76+39	LT	BFRT 2C	20
103+35	RT	BFRT 2C	103+41	RT	BFRT 2C	9
103+57	RT	BFRT 2C	103+87	RT	BFRT 2C	48
130+61	LT	BFRT 2C	130+62	LT	BFRT 2C	21
131+40	RT	BFRT 2C	131+75	RT	BFRT 2C	54
131+79	RT	BFRT 2C	131+98	RT	BFRT 2C	34
135+89	RT	BFRT 2C	135+94	RT	BFRT 2C	89
159+44	LT	BFRT 2C	159+57	LT	BFRT 2C	12
160+75	RT	BFRT 2C	161+57	RT	BFRT 2C	97
700+56	LT	Main St (Rt 62)	700+88	LT	Main St (Rt 62)	33
700+66	RT	Main St (Rt 62)	700+73	RT	Main St (Rt 62)	7
700+84	RT	Main St (Rt 62)	700+89	RT	Main St (Rt 62)	9
701+23	RT	Main St (Rt 62)	701+29	RT	Main St (Rt 62)	22
702+47	LT	Main St (Rt 62)	702+71	LT	Main St (Rt 62)	22
702+91	RT	Main St (Rt 62)	702+94	RT	Main St (Rt 62)	16
703+03	RT	Main St (Rt 62)	703+14	RT	Main St (Rt 62)	16
703+11	RT	Main St (Rt 62)	703+21	RT	Main St (Rt 62)	18
703+16	LT	Main St (Rt 62)	703+29	LT	Main St (Rt 62)	13
703+21	RT	Main St (Rt 62)	703+41	RT	Main St (Rt 62)	38
703+24	RT	Main St (Rt 62)	703+47	RT	Main St (Rt 62)	44
703+33	LT	Main St (Rt 62)	703+54	LT	Main St (Rt 62)	19
703+46	RT	Main St (Rt 62)	703+46	RT	Main St (Rt 62)	20
703+48	RT	Main St (Rt 62)	703+51	RT	Main St (Rt 62)	6
703+51	RT	Main St (Rt 62)	703+58	RT	Main St (Rt 62)	15
					SubTotal =	741
					Add 25% of Item 580.=	66
					Total=	807

Say **850** **FT**

GPI Calculations

Greenman-Pedersen, Inc.

Location Concord **Job Number** MAX-2010031 (605189)
Title Bruce Freeman Rail Trail Phase 2C
Calculated By **Checked By**

Item 620.1 **Steel W Beam Highway Guard (Single Faced)** **FT**

From Station	Side	Baseline	To Station	Side	Baseline	Length
203+89	LT	Powder Mill Rd	205+13	LT	Powder Mill Rd	123
203+90	RT	Powder Mill Rd	205+29	RT	Powder Mill Rd	140
					Total =	263
				Say	**300**	**FT**

GPI Calculations

Greenman-Pedersen, Inc.

Location Concord **Job Number** MAX-2010031 (605189)
Title Bruce Freeman Rail Trail Phase 2C
Calculated By **Checked By**

Item 620.4 **Steel W Beam Highway Guard Buried End (Single Faced)** **EA**

Station	Side	Baseline	Quantity
205+13	LT	Powder Mill Rd	1
203+90	RT	Powder Mill Rd	1
		Total =	2
		Say	**2** **EA**

GPI Calculations

Greenman-Pedersen, Inc.

Location Concord **Job Number** MAX-2010031 (605189)
Title Bruce Freeman Rail Trail Phase 2C
Calculated By **Checked By**

Item 627.1 **Steel W Beam Terminal Section (Single Faced)** **EA**

Station	Side	Baseline	Quantity
203+89	LT	Powder Mill Rd	1
205+29	RT	Powder Mill Rd	1
		Total =	2
		Say	**2** **EA**

GPI Calculations

Greenman-Pedersen, Inc.

Location Concord **Job Number** MAX-2010031 (605189)
Title Bruce Freeman Rail Trail Phase 2C
Calculated By **Checked By**

Item 635.1 **Highway Guard Removed And Discarded** **FT**

From Station	Side	Baseline	To Station	Side	Baseline	Length
203+91	LT	Powder Mill Rd	205+62	LT	Powder Mill Rd	170
203+80	RT	Powder Mill Rd	205+73	RT	Powder Mill Rd	195
					Total =	365
				Say	**400**	**FT**

GPI Calculations

Greenman-Pedersen, Inc.

Location Concord **Job Number** MAX-2010031 (605189)
Title Bruce Freeman Rail Trail Phase 2C
Calculated By **Checked By**

Item 645.172 **72 Inch Chain Link Fence (PTR) Vinyl Coated (Line Post Opt.)** **FT**

From Station	Side	Baseline	To Station	Side	Baseline	Length
22+00	LT	BFRT 2C	25+25	LT	BFRT 2C	325
57+15.00	LT	BFRT 2C	58+18.00	LT	BFRT 2C	103
157+16	RT	BFRT 2C	159+51	RT	BFRT 2C	260
					Total =	688
				Say	**700**	**FT**

GPI Calculations

Greenman-Pedersen, Inc.

Location Concord **Job Number** MAX-2010031 (605189)
Title Bruce Freeman Rail Trail Phase 2C
Calculated By **Checked By**

Item 655.01 **Timber Rail Fence** **FT**

From Station	Side	Baseline	To Station	Side	Baseline	Length
21+15	LT	BFRT 2C	22+35	LT	BFRT 2C	121
21+15	RT	BFRT 2C	22+35	RT	BFRT 2C	121
33+29	RT	BFRT 2C	33+71	RT	BFRT 2C	41
33+32	LT	BFRT 2C	33+71	LT	BFRT 2C	41
34+16	LT	BFRT 2C	36+36	LT	BFRT 2C	221
34+66	RT	BFRT 2C	35+86	RT	BFRT 2C	121
38+16	LT	BFRT 2C	41+86	LT	BFRT 2C	372
42+66	RT	BFRT 2C	52+15	RT	BFRT 2C	950
43+16	LT	BFRT 2C	52+36	LT	BFRT 2C	921
52+36	RT	BFRT 2C	53+36	RT	BFRT 2C	100
56+81	RT	BFRT 2C	57+21	RT	BFRT 2C	41
56+81	LT	BFRT 2C	57+21	LT	BFRT 2C	41
58+91	RT	BFRT 2C	59+61	RT	BFRT 2C	71
59+16	LT	BFRT 2C	61+36	LT	BFRT 2C	221
61+16	RT	BFRT 2C	63+11	RT	BFRT 2C	196
62+31	LT	BFRT 2C	62+71	LT	BFRT 2C	41
78+16	RT	BFRT 2C	79+86	RT	BFRT 2C	171
78+16	LT	BFRT 2C	82+86	LT	BFRT 2C	471
80+66	RT	BFRT 2C	84+86	RT	BFRT 2C	421
84+16	LT	BFRT 2C	84+86	LT	BFRT 2C	71
85+66	RT	BFRT 2C	87+86	RT	BFRT 2C	221
86+16	LT	BFRT 2C	86+86	LT	BFRT 2C	71
95+16	RT	BFRT 2C	95+86	RT	BFRT 2C	71
104+05	RT	BFRT 2C	105+00	RT	BFRT 2C	100
114+66	LT	BFRT 2C	115+38	LT	BFRT 2C	74
114+66	RT	BFRT 2C	116+10	RT	BFRT 2C	145
115+49	LT	BFRT 2C	115+93	LT	BFRT 2C	45
116+00	LT	BFRT 2C	116+10	LT	BFRT 2C	10
117+16	RT	BFRT 2C	117+63	RT	BFRT 2C	57
117+19	LT	BFRT 2C	117+36	LT	BFRT 2C	17
127+17	LT	BFRT 2C	127+91	LT	BFRT 2C	80
128+11	LT	BFRT 2C	129+33	LT	BFRT 2C	121
133+09	RT	BFRT 2C	133+43	RT	BFRT 2C	35
138+10	RT	BFRT 2C	138+39	RT	BFRT 2C	52
138+42	RT	BFRT 2C	138+87	RT	BFRT 2C	65
138+57	LT	BFRT 2C	138+86	LT	BFRT 2C	28
139+60	LT	BFRT 2C	142+10	LT	BFRT 2C	250
139+61	RT	BFRT 2C	140+60	RT	BFRT 2C	106
146+99	LT	BFRT 2C	151+49	LT	BFRT 2C	450
160+32	LT	BFRT 2C	160+99	LT	BFRT 2C	68
160+80	LT	BFRT 2C	163+79	LT	BFRT 2C	293
301+82	LT	Powder Access	302+33	LT	Powder Access	64
303+07	RT	Powder Access	303+33	RT	Powder Access	34
303+62	LT	Powder Access	304+22	LT	Powder Access	72
304+42	RT	Powder Access	304+63	RT	Powder Access	28
					Total =	7311

Say **7,500** **FT**

GPI Calculations

Greenman-Pedersen, Inc.

Location Concord **Job Number** MAX-2010031 (605189)
Title Bruce Freeman Rail Trail Phase 2C
Calculated By **Checked By**

Item 655.04 **48" Three-Rail Bolted Timber Fence** **FT**

From Station	Side	Baseline	To Station	Side	Baseline	Length
1+43	LT	BFRT 2C	17+60	LT	BFRT 2C	1613
					Total =	1613
				Say	**2,000**	**FT**

GPI Calculations

Greenman-Pedersen, Inc.

Location Concord **Job Number** MAX-2010031 (605189)
Title Bruce Freeman Rail Trail Phase 2C
Calculated By **Checked By**

Item 656.1 **Ornamental Steel Fence** **FT**

From Station	Side	Baseline	To Station	Side	Baseline	Length
9+91	RT	BFRT 2C	17+60	RT	BFRT 2C	773
					Total =	773
				Say	**800**	**FT**

GPI Calculations **Greenman-Pedersen, Inc.**

Location Concord **Job Number** MAX-2010031 (605189)
Title Bruce Freeman Rail Trail Phase 2C
Calculated By **Checked By**

Item 656.2 **Wrought Iron Fence** **FT**

Proposed 3 FT High Black Wrought Iron Fence to be used at Pathway Grade Crossing

Location	Length
RT of SB of Pathway	16
LT of SB of Pathway	15
RT of NB of Pathway	16
LT of NB of Pathway	15
Total =	62

Say 65 FT

GPI Calculations **Greenman-Pedersen, Inc.**

Location Concord **Job Number** MAX-2010031 (605189)
Title Bruce Freeman Rail Trail Phase 2C
Calculated By **Checked By**

Item 657. **Temporary Fence** **FT**

For temporary traffic controle use during construction

TTCP	Length
Stage #1	151

Say 200 FT

GPI Calculations **Greenman-Pedersen, Inc.**

Location Concord **Job Number** MAX-2010031 (605189)
Title Bruce Freeman Rail Trail Phase 2C
Calculated By **Checked By**

Item 657.5 **Temporary Fence Removed And Reset** **FT**

For temporary traffic controle use during construction

TTCP	Length
Stage #2	152

Say 200 FT

GPI Calculations

Greenman-Pedersen, Inc.

Location Concord **Job Number** MAX-2010031 (605189)
Title Bruce Freeman Rail Trail Phase 2C
Calculated By **Checked By**

Item 660.01 **Handrails** **FT**

From Station	Side	Baseline	To Station	Side	Baseline	Length
302+31	RT	Powder Access	302+73	RT	Powder Access	42
302+32	LT	Powder Access	302+74	LT	Powder Access	42
301+29	RT	Powder Access	301+71	RT	Powder Access	42
301+29	LT	Powder Access	301+71	LT	Powder Access	42
					Total =	168

Say **200** **FT**

GPI Calculations

Greenman-Pedersen, Inc.

Location Concord **Job Number** MAX-2010031 (605189)
Title Bruce Freeman Rail Trail Phase 2C
Calculated By **Checked By**

Item 665. **Chain Link Fence Removed And Stacked** **FT**

From Station	Side	Baseline	To Station	Side	Baseline	Length
115+78	RT	BFRT 2C	116+23	RT	BFRT 2C	106
117+06	RT	BFRT 2C	117+25	RT	BFRT 2C	84
					Total =	190
				Say	**200**	**FT**

GPI Calculations

Greenman-Pedersen, Inc.

Location Concord **Job Number** MAX-2010031 (605189)
Title Bruce Freeman Rail Trail Phase 2C
Calculated By **Checked By**

Item 665.3 **72 Inch Stockade Fence** **FT**

From Station	Side	Baseline	To Station	Side	Baseline	Length
152+53	LT	BFRT 2C	154+09	LT	BFRT 2C	156
					Total =	156
				Say	**200**	**FT**

GPI Calculations

Greenman-Pedersen, Inc.

Location Concord **Job Number** MAX-2010031 (605189)
Title Bruce Freeman Rail Trail Phase 2C
Calculated By **Checked By**

Item 666. **Chain Link Fence Removed And Reset** **FT**

From Station	Side	Baseline	To Station	Side	Baseline	Length
28+95	LT	BFRT 2C	29+13	LT	BFRT 2C	207
					Total =	207
				Say	**250**	**FT**

GPI Calculations **Greenman-Pedersen, Inc.**

Location Concord **Job Number** MAX-2010031 (605189)
Title Bruce Freeman Rail Trail Phase 2C
Calculated By **Checked By**

Item 669. **Fence Removed And Stacked** **FT**

Remove and Stack Exsitng Wroght Iron Fence between RR Tracks at Rail-Highway Grade Crossing

Say 20 FT

GPI Calculations

Greenman-Pedersen, Inc.

Location Concord **Job Number** MAX-2010031 (605189)
Title Bruce Freeman Rail Trail Phase 2C
Calculated By **Checked By**

Item 669.5 **Fence Removed And Discard** **FT**

From Station	Side	Baseline	To Station	Side	Baseline	Length
132+42	RT	BFRT 2C	132+65	RT	BFRT 2C	25
157+16	RT	BFRT 2C	159+51	RT	BFRT 2C	243
					Total =	268
				Say	**300**	**FT**

GPI Calculations

Greenman-Pedersen, Inc.

Location Concord **Job Number** MAX-2010031 (605189)
Title Bruce Freeman Rail Trail Phase 2C
Calculated By **Checked By**

Item 673. **Steel Pipe Access Gate** **EA**

Station	Side	Baseline		Quantity	
144+82	RT	BFRT 2C		1	
			Total =	1	
			Say	**1**	**EA**

GPI Calculations **Greenman-Pedersen, Inc.**

Location	Concord	**Job Number**	MAX-2010031 (605189)
Title	Bruce Freeman Rail Trail Phase 2C		
Calculated By		**Checked By**	

Item 685. **Stone Masonry Wall In Cement Mortar** **CY**

For the 2 Field Stone Masonry Pipe Ends at Sta. 81+00

1 Headwall=	41.25	CF	=	1.5 CY
x2 Headwalls			=	3.1 CY
	Say	**4**	**CY**	

GPI Calculations

Greenman-Pedersen, Inc.

Location Concord **Job Number** MAX-2010031 (605189)
Title Bruce Freeman Rail Trail Phase 2C
Calculated By **Checked By**

Item 690. **Stone Masonry Wall Removed And Rebuilt In Cement Mortar** **CY**

Station	Side	Baseline		Quantity	
138+88	RT	BFRT 2C		10	CY
			Total =	10	CY
			Say	**10**	**CY**

GPI Calculations

Greenman-Pedersen, Inc.

Location	Concord	**Job Number**	MAX-2010031 (605189)
Title	Bruce Freeman Rail Trail Phase 2C		
Calculated By		**Checked By**	

Item 691.01	**Landscape Boulder**				**EA**
	See Landscape Plans				
		Say	**10**	**EA**	

GPI Calculations

Greenman-Pedersen, Inc.

Location	Concord	**Job Number**	MAX-2010031 (605189)
Title	Bruce Freeman Rail Trail Phase 2C		
Calculated By		**Checked By**	

Item 701. **Cement Concrete Sidewalk** **SY**

From Surface Area Summary	Area (SY)
Cement Concrete Sidewalk	456.26
Say	**460** **SY**

GPI Calculations

Greenman-Pedersen, Inc.

Location	Concord	**Job Number**	MAX-2010031 (605189)
Title	Bruce Freeman Rail Trail Phase 2C		
Calculated By		**Checked By**	

Item 701.2 **Cement Concrete Wheelchair Ramp** **SY**

From Surface Area Summary	Area (SY)
Cement Concrete Wheelchair Ramps	139.83
Say	**140** **SY**

GPI Calculations

Greenman-Pedersen, Inc.

Location	Concord	**Job Number**	MAX-2010031 (605189)
Title	Bruce Freeman Rail Trail Phase 2C		
Calculated By		**Checked By**	

Item 702. **Hot Mix Asphalt Walk Surface** **TON**

From Surface Areas	Area (sy)	Depth (in)	Weight (TON)	
Hot Mix Asphalt Walk	7234.80	2.50	1012.87	
		Say	**1,020**	**TON**

GPI Calculations

Greenman-Pedersen, Inc.

Location	Concord	**Job Number**	MAX-2010031 (605189)
Title	Bruce Freeman Rail Trail Phase 2C		
Calculated By		**Checked By**	

Item 703. **Hot Mix Asphalt Driveway** **TON**

From Surface Areas	Area (sy)	Depth (in)	Weight (TON)
Hot Mix Asphalt Driveways	857.48	3.50	168.07
Hot Mix Asphalt Parking Lots	3839.96	3.50	752.63
		Total =	920.70
		Say	**930** **TON**

GPI Calculations

Greenman-Pedersen, Inc.

Location	Concord	**Job Number**	MAX-2010031 (605189)
Title	Bruce Freeman Rail Trail Phase 2C		
Calculated By		**Checked By**	

Item 704.2 **Stone Dust** **TON**

Assume 2700 pounds per cubic yard

From Surface Area Summary	Area (sy)	Depth (in)	Volume (CY)	Weight(TON)
Stone Dust Shoulder	6639.33	4.00	737.70	995.9
		Say	**1,000**	**TON**

GPI Calculations

Greenman-Pedersen, Inc.

Location Concord **Job Number** MAX-2010031 (605189)
Title Bruce Freeman Rail Trail Phase 2C
Calculated By **Checked By**

Item 707.1 **Park Bench** **EA**

Station	Side	Baseline		Quantity	
52+22	RT	BFRT 2C		1	
52+30	RT	BFRT 2C		1	
117+27	RT	BFRT 2C		1	
117+36	RT	BFRT 2C		1	
138+62	RT	BFRT 2C		1	
138+69	RT	BFRT 2C		1	
138+78	RT	BFRT 2C		1	
139+76	RT	BFRT 2C		1	
139+85	RT	BFRT 2C		1	
139+94	RT	BFRT 2C		1	
			Total =	10	
			Say	**10**	**EA**

GPI Calculations

Greenman-Pedersen, Inc.

Location Concord **Job Number** MAX-2010031 (605189)
Title Bruce Freeman Rail Trail Phase 2C
Calculated By **Checked By**

Item 707.15 **Park Bench Removed And Reset** **EA**

Station	Side	Baseline		Quantity	
124+31	RT	BFRT 2C		1	
132+13	RT	BFRT 2C		1	
			Total =	2	
			Say	**2**	**EA**

GPI Calculations

Greenman-Pedersen, Inc.

Location Concord **Job Number** MAX-2010031 (605189)
Title Bruce Freeman Rail Trail Phase 2C
Calculated By **Checked By**

Item 707.7 **Display Board** **EA**

Station	Side	Baseline	Quantity
124+02	RT	BFRT 2C	1
		Total =	1
		Say	**1** **EA**

GPI Calculations

Greenman-Pedersen, Inc.

Location Concord **Job Number** MAX-2010031 (605189)
Title Bruce Freeman Rail Trail Phase 2C
Calculated By **Checked By**

Item 707.81 **Steel Bollard Removed and Discarded** **EA**

Station	Side	Baseline		Quantity	
130+59	RT	BFRT 2C		2	
130+59	LT	BFRT 2C		2	
			Total =	4	
			Say	**4**	**EA**

GPI Calculations

Greenman-Pedersen, Inc.

Location Concord **Job Number** MAX-2010031 (605189)
Title Bruce Freeman Rail Trail Phase 2C
Calculated By **Checked By**

Item 707.9 **Bicycle Rack** **EA**

Station	Side	Baseline		Quantity	
124+09	RT	BFRT 2C		1	
124+11	RT	BFRT 2C		1	
124+14	RT	BFRT 2C		1	
			Total =	3	
			Say	**3**	**EA**

GPI Calculations

Greenman-Pedersen, Inc.

Location	Concord	**Job Number**	MAX-2010031 (605189)
Title	Bruce Freeman Rail Trail Phase 2C		
Calculated By		**Checked By**	

Item 708.25 **Cement Concrete Paver Island** **SY**

From Surface Area Summary	Area (SY)
Cement Concrete Paver Splitter Islands	27.27

Say **30** **SY**

GPI Calculations

Greenman-Pedersen, Inc.

Location	Concord	**Job Number**	MAX-2010031 (605189)
Title	Bruce Freeman Rail Trail Phase 2C		
Calculated By		**Checked By**	

Item 708.35 **Pervious Cement Concrete Paver** **SY**

From Surface Area Summary	Area (sf)	Area (SY)
Pervious Cement Concrete Paver	5824.65	647.18

Say **650** **SY**

GPI Calculations

Greenman-Pedersen, Inc.

Location Concord **Job Number** MAX-2010031 (605189)
Title Bruce Freeman Rail Trail Phase 2C
Calculated By **Checked By**

Item 710.8 **Granite Mile Marker** **EA**

Station	Side	Baseline	Quantity
9+16	LT	BFRT 2C	1
22+56	LT	BFRT 2C	1
35+93	LT	BFRT 2C	1
49+37	LT	BFRT 2C	1
62+77	LT	BFRT 2C	1
76+47	LT	BFRT 2C	1
89+67	LT	BFRT 2C	1
103+03	LT	BFRT 2C	1
116+16	LT	BFRT 2C	1
133+13	RT	BFRT 2C	1
147+07	LT	BFRT 2C	1
160+57	LT	BFRT 2C	1
		Total =	12
		Say	**12** **EA**

GPI Calculations

Greenman-Pedersen, Inc.

Location Concord **Job Number** MAX-2010031 (605189)
Title Bruce Freeman Rail Trail Phase 2C
Calculated By **Checked By**

Item 710.85 **Granite Post Sign** **EA**

Station	Side	Baseline		Quantity	
68+26	RT	BFRT 2C		1	
127+90	RT	BFRT 2C		1	
			Total =	2	
			Say	**2**	**EA**

GPI Calculations

Greenman-Pedersen, Inc.

Location Concord **Job Number** MAX-2010031 (605189)
Title Bruce Freeman Rail Trail Phase 2C
Calculated By **Checked By**

Item 710.9 **Granite Pier** **EA**

Station	Side	Baseline		Quantity	
75+69	LT	BFRT 2C		1	
76+23	RT	BFRT 2C		1	
103+36	RT	BFRT 2C		1	
103+73	LT	BFRT 2C		1	
124+17	LT	BFRT 2C		1	
131+22	LT	BFRT 2C		1	
136+26	LT	BFRT 2C		1	
136+74	RT	BFRT 2C		1	
159+48	LT	BFRT 2C		1	
160+25	RT	BFRT 2C		1	
			Total =	10	
			Say	**10**	**EA**

GPI Calculations

Greenman-Pedersen, Inc.

Location Concord **Job Number** MAX-2010031 (605189)
Title Bruce Freeman Rail Trail Phase 2C
Calculated By **Checked By**

Item 714.51 **Granite Monument Removed and Reset** **EA**

Station	Side	Baseline		Quantity	
126+90	LT	BFRT 2C		1	
126+97	RT	BFRT 2C		1	
127+05	RT	BFRT 2C		1	
127+11	LT	BFRT 2C		1	
127+17	LT	BFRT 2C		1	
			Total =	5	
			Say	**5**	**EA**

GPI Calculations

Greenman-Pedersen, Inc.

Location Concord **Job Number** MAX-2010031 (605189)
Title Bruce Freeman Rail Trail Phase 2C
Calculated By **Checked By**

Item 714.6 **Semaphore Repair** **LS**

Station	Side	Baseline		Quantity	
68+32	RT	BFRT 2C		1	
			Total =	1	
			Say	**1**	**LS**

GPI Calculations

Greenman-Pedersen, Inc.

Location Concord **Job Number** MAX-2010031 (605189)
Title Bruce Freeman Rail Trail Phase 2C
Calculated By **Checked By**

Item 714.7 **Historic Sign Repaired and Reset** **EA**

Station	Side	Baseline		Quantity
62+94	LT	BFRT 2C	Historic Sign Repaired and Reset	1
69+95	LT	BFRT 2C	Historic Sign Repaired and Reset	1
			Total = 2	
			Say 2 EA	

GPI Calculations

Greenman-Pedersen, Inc.

Location Concord **Job Number** MAX-2010031 (605189)
Title Bruce Freeman Rail Trail Phase 2C
Calculated By **Checked By**

Item 714.8 **Battery Well And Signal Box Remove And Relocated** **EA**

Station	Side	Baseline		Quantity
102+46	LT	BFRT 2C		1
112+03	RT	BFRT 2C		1
			Total =	2
			Say	**2** **EA**

GPI Calculations

Greenman-Pedersen, Inc.

Location Concord **Job Number** MAX-2010031 (605189)
Title Bruce Freeman Rail Trail Phase 2C
Calculated By **Checked By**

Item 734.2 **Sign - Interpretive - NPS Standard** **EA**

Station	Side	Baseline		Quantity	
29+81	LT	BFRT 2C		1	
52+43	RT	BFRT 2C		1	
117+20	RT	BFRT 2C		1	
138+85	RT	BFRT 2C		1	
139+68	RT	BFRT 2C		1	
145+64	RT	BFRT 2C		1	
149+96	RT	BFRT 2C		1	
			Total =	7	
			Say	**7**	**EA**

GPI Calculations

Greenman-Pedersen, Inc.

Location Concord **Job Number** MAX-2010031 (605189)
Title Bruce Freeman Rail Trail Phase 2C
Calculated By **Checked By**

Item 734.3 **Sign - Interpretive - NPS 18"x24"** **EA**

Station	Side	Baseline		Quantity	
9+50	RT	BFRT 2C		1	
13+99	RT	BFRT 2C		1	
15+50	RT	BFRT 2C		1	
17+50	RT	BFRT 2C		1	
20+96	RT	BFRT 2C		1	
			Total =	5	
			Say	**5**	**EA**

GPI Calculations **Greenman-Pedersen, Inc.**

Location	Concord	**Job Number**	MAX-2010031 (605189)
Title	Bruce Freeman Rail Trail Phase 2C		
Calculated By		**Checked By**	

Item 740. **Engineers Field Office And Equipment (Type A)** **MO**

Assume 24 Month Construction Duration
Assume Field Office is needed for 1 month prior to construction and 1 month after substantial completion

Assume total = 26 months

Say 26 MO

GPI Calculations **Greenman-Pedersen, Inc.**

Location	Concord	**Job Number**	MAX-2010031 (605189)
Title	Bruce Freeman Rail Trail Phase 2C		
Calculated By		**Checked By**	

Item 748. **Mobilization** **LS**

Say 1 LS

GPI Calculations

Greenman-Pedersen, Inc.

Location	Concord	**Job Number**	MAX-2010031 (605189)
Title	Bruce Freeman Rail Trail Phase 2C		
Calculated By		**Checked By**	

Item 751.7 **Compost Topsoil** **SY**

From Surface Area Summary	Area (SF)		Area (SY)	
Loam and Seed	136514		15168.21	
At-Grade Rail Crossing	376.04		41.78	
		Total=	15210	
		Say	**16,000**	**SY**

GPI Calculations

Greenman-Pedersen, Inc.

Location	Concord	**Job Number**	MAX-2010031 (605189)
Title	Bruce Freeman Rail Trail Phase 2C		
Calculated By		**Checked By**	

Item 755.3	**Non-Tidal Wetland Mitigation Areas**	**LS**

Say	**1**	**LS**

GPI Calculations

Greenman-Pedersen, Inc.

Location	Concord	**Job Number**	MAX-2010031 (605189)
Title	Bruce Freeman Rail Trail Phase 2C		
Calculated By		**Checked By**	

Item 755.7	**Wetland Specialist**				**HR**
		Say	**20**	**HR**	

GPI Calculations

Greenman-Pedersen, Inc.

Location	Concord	**Job Number**	MAX-2010031 (605189)
Title	Bruce Freeman Rail Trail Phase 2C		
Calculated By		**Checked By**	

Item 756. **NPDES Stormwater Pollution Prevention Plan** **LS**

Say 1 LS

GPI Calculations

Greenman-Pedersen, Inc.

Location	Concord	**Job Number**	MAX-2010031 (605189)
Title	Bruce Freeman Rail Trail Phase 2C		
Calculated By		**Checked By**	

Item 765.4 **Seeding - Restoration Mix** **SY**

From Surface Area Summary	Area (SF)		Area (SY)	
Loam and Seed	136514		15168.21	
At-Grade Rail Crossing	376.04		41.78	
		Total=	15210	
		Say	**16,000**	**SY**

GPI Calculations

Greenman-Pedersen, Inc.

Location Concord **Job Number** MAX-2010031 (605189)
Title Bruce Freeman Rail Trail Phase 2C
Calculated By **Checked By**

Item 767.12 **Compost Filter Tubes** **FT**

From Station	Side	Baseline	To Station	Side	Baseline	Length
10+01	RT	BFRT 2C	24+02	RT	BFRT 2C	1437
10+28	LT	BFRT 2C	20+26	LT	BFRT 2C	1012
12+30	RT	BFRT 2C	12+30	RT	BFRT 2C	0
29+84	LT	BFRT 2C	54+12	LT	BFRT 2C	2731
31+74	LT	BFRT 2C	31+74	LT	BFRT 2C	0
41+74	RT	BFRT 2C	63+77	RT	BFRT 2C	2293
56+56	LT	BFRT 2C	63+00	LT	BFRT 2C	652
76+61	LT	BFRT 2C	80+93	LT	BFRT 2C	459
79+16	RT	BFRT 2C	81+14	RT	BFRT 2C	216
81+08	LT	BFRT 2C	95+95	LT	BFRT 2C	1531
81+27	RT	BFRT 2C	96+26	RT	BFRT 2C	1556
96+13	LT	BFRT 2C	103+20	LT	BFRT 2C	737
103+60	LT	BFRT 2C	116+11	LT	BFRT 2C	1277
113+07	RT	BFRT 2C	116+15	RT	BFRT 2C	320
117+15	LT	BFRT 2C	118+99	LT	BFRT 2C	221
117+20	RT	BFRT 2C	120+47	RT	BFRT 2C	337
119+09	LT	BFRT 2C	120+38	LT	BFRT 2C	157
136+84	RT	BFRT 2C	139+07	RT	BFRT 2C	229
136+97	LT	BFRT 2C	137+97	LT	BFRT 2C	103
138+04	LT	BFRT 2C	139+06	LT	BFRT 2C	108
139+60	RT	BFRT 2C	143+83	RT	BFRT 2C	433
139+60	LT	BFRT 2C	142+25	LT	BFRT 2C	274
					Total =	16083

Say **17,000** **FT**

GPI Calculations **Greenman-Pedersen, Inc.**

Location	Concord	**Job Number**	MAX-2010031 (605189)
Title	Bruce Freeman Rail Trail Phase 2C		
Calculated By		**Checked By**	

Item 767.31 **Straw Mulch** **SY**

For use with Item 765.4. To be placed on all distributed slopes if the season prevents establishment of a vegetative cover. Assume 20% of the area from Item 765.4.

From Item 765.4	15210	SY x 20% =	3042.00	SY
		Say	**3,500**	**SY**

GPI Calculations **Greenman-Pedersen, Inc.**

Location Concord **Job Number** MAX-2010031 (605189)
Title Bruce Freeman Rail Trail Phase 2C
Calculated By **Checked By**

Item 767.9 **Matting For Erosion Control** **SY**

For Drainage Swales over 500'
Assume Matting width of 3'

Station	To Station	Side	Baseline	Length (FT)
8+00	13+50	RT	BFRT 2C	552
24+00	30+00	RT	BFRT 2C	601
24+25	31+84	LT	BFRT 2C	760
62+50	67+90	LT	BFRT 2C	541
95+95	102+50	LT	BFRT 2C	656
96+03	101+77	RT	BFRT 2C	576
144+74	150+74	LT	BFRT 2C	600
149+99	156+49	RT	BFRT 2C	651

				Total=	4,937	FT
4,937	Feet of Swale	x	3'	=	14,811	SF
				=	1,645.69	SY
			Say	**2,000**	**SY**	

GPI Calculations

Greenman-Pedersen, Inc.

Location	Concord	**Job Number**	MAX-2010031 (605189)
Title	Bruce Freeman Rail Trail Phase 2C		
Calculated By		**Checked By**	

Item 772.438 **Hemlock - Canada 7-8 Feet** **EA**

From Landscape Plans

Say **3** **EA**

GPI Calculations

Greenman-Pedersen, Inc.

Location	Concord	**Job Number**	MAX-2010031 (605189)
Title	Bruce Freeman Rail Trail Phase 2C		
Calculated By		**Checked By**	

Item 773.037 **Pine - Austrian 7-8 Feet** **EA**

From Landscape Plans

Say	**18**	**EA**

GPI Calculations

Greenman-Pedersen, Inc.

Location	Concord	**Job Number**	MAX-2010031 (605189)
Title	Bruce Freeman Rail Trail Phase 2C		
Calculated By		**Checked By**	

Item 773.437 **Pine - White 7-8 Feet** **EA**

From Landscape Plans

Say **28** **EA**

GPI Calculations

Greenman-Pedersen, Inc.

Location	Concord	**Job Number**	MAX-2010031 (605189)
Title	Bruce Freeman Rail Trail Phase 2C		
Calculated By		**Checked By**	

Item 775.027 **Elm - American - 'Valley Forge' 2-2.5 Inch Caliper** **EA**

From Landscape Plans

Say	**4**	**EA**

GPI Calculations

Greenman-Pedersen, Inc.

Location	Concord	**Job Number**	MAX-2010031 (605189)
Title	Bruce Freeman Rail Trail Phase 2C		
Calculated By		**Checked By**	

Item 775.405 **Locust - Honey 2-2.5 Inch Caliper** **EA**

From Landscape Plans

Say **5** **EA**

GPI Calculations

Greenman-Pedersen, Inc.

Location	Concord	**Job Number**	MAX-2010031 (605189)
Title	Bruce Freeman Rail Trail Phase 2C		
Calculated By		**Checked By**	

Item 776.543 **Maple - Red - 'October Glory' 2-2.5 Inch Caliper** **EA**

From Landscape Plans

Say 6 EA

GPI Calculations

Greenman-Pedersen, Inc.

Location	Concord	**Job Number**	MAX-2010031 (605189)
Title	Bruce Freeman Rail Trail Phase 2C		
Calculated By		**Checked By**	

Item 777.138 **Oak - Pin 2-2.5 Inch Caliper** **EA**

From Landscape Plans

Say **2** **EA**

GPI Calculations

Greenman-Pedersen, Inc.

Location	Concord	**Job Number**	MAX-2010031 (605189)
Title	Bruce Freeman Rail Trail Phase 2C		
Calculated By		**Checked By**	

Item 777.263 **Oak - Swamp White 2-2.5 Inch Caliper** **EA**

From Landscape Plans

Say	**3**	**EA**

GPI Calculations

Greenman-Pedersen, Inc.

Location	Concord	**Job Number**	MAX-2010031 (605189)
Title	Bruce Freeman Rail Trail Phase 2C		
Calculated By		**Checked By**	

Item 777.654 **Serviceberry - Rainbbow Pillar 5-6 Feet** **EA**

From Landscape Plans

Say	**5**	**EA**

GPI Calculations

Greenman-Pedersen, Inc.

Location	Concord	**Job Number**	MAX-2010031 (605189)
Title	Bruce Freeman Rail Trail Phase 2C		
Calculated By		**Checked By**	

Item 785.632 **Inkberry 24-30 Inch** **EA**

From Landscape Plans

Say **18** **EA**

GPI Calculations

Greenman-Pedersen, Inc.

Location	Concord	**Job Number**	MAX-2010031 (605189)
Title	Bruce Freeman Rail Trail Phase 2C		
Calculated By		**Checked By**	

Item 786.672 **Mountain Laurel 30-36 Inch** **EA**

From Landscape Plans

Say **6** **EA**

GPI Calculations

Greenman-Pedersen, Inc.

Location	Concord	**Job Number**	MAX-2010031 (605189)
Title	Bruce Freeman Rail Trail Phase 2C		
Calculated By		**Checked By**	

Item 787.084 **Rhodo- Roseberry 36-48 Inch** **EA**

From Landscape Plans

Say **10** **EA**

GPI Calculations

Greenman-Pedersen, Inc.

Location	Concord	**Job Number**	MAX-2010031 (605189)
Title	Bruce Freeman Rail Trail Phase 2C		
Calculated By		**Checked By**	

Item 789.917 **Chokeberry - Black 24-30 Inch** **EA**

From Landscape Plans

Say **15** **EA**

GPI Calculations

Greenman-Pedersen, Inc.

Location	Concord	**Job Number**	MAX-2010031 (605189)
Title	Bruce Freeman Rail Trail Phase 2C		
Calculated By		**Checked By**	

Item 789.925 **Chokeberry - Red 24-30 Inch** **EA**

From Landscape Plans

Say **30** **EA**

GPI Calculations

Greenman-Pedersen, Inc.

Location	Concord	**Job Number**	MAX-2010031 (605189)
Title	Bruce Freeman Rail Trail Phase 2C		
Calculated By		**Checked By**	

Item 790.632 **Dogwood - Redosier 24-30 Inch** **EA**

From Landscape Plans

Say	**22**	**EA**

GPI Calculations

Greenman-Pedersen, Inc.

Location	Concord	**Job Number**	MAX-2010031 (605189)
Title	Bruce Freeman Rail Trail Phase 2C		
Calculated By		**Checked By**	

Item 790.711 **Dogwood -Silky 24-30 Inch** **EA**

From Landscape Plans

Say **10** **EA**

GPI Calculations

Greenman-Pedersen, Inc.

Location	Concord	**Job Number**	MAX-2010031 (605189)
Title	Bruce Freeman Rail Trail Phase 2C		
Calculated By		**Checked By**	

Item 792.431 **Lilac - Common Purple 2.5-3 Feet** **EA**

From Landscape Plans

Say 8 EA

GPI Calculations

Greenman-Pedersen, Inc.

Location	Concord	**Job Number**	MAX-2010031 (605189)
Title	Bruce Freeman Rail Trail Phase 2C		
Calculated By		**Checked By**	

Item 794.323 **Sumac Shrub - Fragrant 18-24 Inch** **EA**

From Landscape Plans

Say	**25**	**EA**

GPI Calculations

Greenman-Pedersen, Inc.

Location	Concord	**Job Number**	MAX-2010031 (605189)
Title	Bruce Freeman Rail Trail Phase 2C		
Calculated By		**Checked By**	

Item 794.734 **Summersweet Shrub 24-30 Inch** **EA**

From Landscape Plans

Say **8** **EA**

GPI Calculations

Greenman-Pedersen, Inc.

Location	Concord	**Job Number**	MAX-2010031 (605189)
Title	Bruce Freeman Rail Trail Phase 2C		
Calculated By		**Checked By**	

Item 795.005 **Viburnum - American Cranberry 24-30 Inch** **EA**

From Landscape Plans

Say	**44**	**EA**

GPI Calculations

Greenman-Pedersen, Inc.

Location	Concord	**Job Number**	MAX-2010031 (605189)
Title	Bruce Freeman Rail Trail Phase 2C		
Calculated By		**Checked By**	

Item 795.153 **Winterberry - Male 24-30 Inch** **EA**

From Landscape Plans

Say **9** **EA**

GPI Calculations

Greenman-Pedersen, Inc.

Location	Concord	**Job Number**	MAX-2010031 (605189)
Title	Bruce Freeman Rail Trail Phase 2C		
Calculated By		**Checked By**	

Item 795.157 **Winterberry - Female 24-30 Inch** **EA**

From Landscape Plans

Say **10** **EA**

GPI Calculations

Greenman-Pedersen, Inc.

Location	Concord	**Job Number**	MAX-2010031 (605189)
Title	Bruce Freeman Rail Trail Phase 2C		
Calculated By	CTW	**Checked By**	

Item 804.3 **3 Inch Electrical Conduit Type NM - Plastic -(UL)** **FT**

Station	Side		Type	To Station	Side		Type	
704+21	LT	Main St	Pull Box	703+56	LT	Main St	Controller	60
703+56	LT	Main St	Controller	704+00	LT	Main St	Pull Box	35
703+56	LT	Main St	Controller	703+48	LT	Main St	Mast Arm	6
703+56	LT	Main St	Controller	703+46	LT	Main St	Pull Box	10
703+46	LT	Main St	Pull Box	703+22	LT	Main St	Mast Arm	22
703+46	LT	Main St	Pull Box	800+36	RT	Comm. Ave	Pull Box	57
800+36	RT	Comm. Ave	Pull Box	702+93	RT	Main St	Pull Box	40
800+36	RT	Comm. Ave	Pull Box	800+37	RT	Comm. Ave	10' Post	4
800+36	RT	Comm. Ave	Pull Box	800+47	LT	Comm. Ave	Pull Box	56
800+47	LT	Comm. Ave	Pull Box	800+67	LT	Comm. Ave	Pull Box	17
800+47	LT	Comm. Ave	Pull Box	703+86	RT	Main St	Mast Arm	17
							Total =	324

Say **350** **FT**

GPI Calculations

Greenman-Pedersen, Inc.

Location	Concord	**Job Number**	MAX-2010031 (605189)
Title	Bruce Freeman Rail Trail Phase 2C		
Calculated By	CTW	**Checked By**	

Item 811.31 **Pull Box 12 X 12 Inches - Sd2.031** **EA**

Station			
704+00	LT	Main St	1
703+46	LT	Main St	1
800+36	RT	Comm. Ave	1
702+93	RT	Main St	1
800+47	LT	Comm. Ave	1
800+67	LT	Comm. Ave	1

Total = 6

Say 6 EA

GPI Calculations

Greenman-Pedersen, Inc.

Location	Concord	**Job Number**	MAX-2010031 (605189)
Title	Bruce Freeman Rail Trail Phase 2C		
Calculated By	CTW	**Checked By**	

Item 811.36 **Electric Manhole Adjusted** **EA**

Station			
76+23	LT	BFRT 2C	1
102+28	LT	BFRT 2C	1
123+26	RT	BFRT 2C	1
124+31	LT	BFRT 2C	1

Total = 4

Say **4** **EA**

GPI Calculations

Greenman-Pedersen, Inc.

Location	Concord	**Job Number**	MAX-2010031 (605189)
Title	Bruce Freeman Rail Trail Phase 2C		
Calculated By	CTW	**Checked By**	

Item 815.15 **Rail-Highway Crossing Active Warning System (AARDOT XXX-XXXX)** **LS**

Signals for the Bruce Freeman Rail Trail Rail-Highway Active Warning Systems to be designed to work with/be controlled by the existing Commonwealth Ave Grade Crossing (AARDOT 052-349R) Signal System, new hardware to include new signal masts, bell, flashers and 12'-0" gates

Location #1	No. Required
Grade Crossing AARDOT XXX-XXXX	1

Sub Items	Unit	Quantity			
Railroad Signal mast with two sets of flashers and 12' gate	EA	2	Estimated Cost:	$	90,000.00
Railroad Signal bell on signal mast	EA	1			
4" Dia Galvanized Steel Utility Conduits below Track	FT	56			
4" Dia Galvanized Steel Utility Conduits below Pathway	FT	24			
Underground Conenction to existing AARDOT 052-349R Gate	FT	120			
Additional Components to Signal Box for Crossing AARDOT 052-34	LS	1			
	Say	**1**	**LS**		

GPI Calculations

Greenman-Pedersen, Inc.

Location	Concord	**Job Number**	MAX-2010031 (605189)
Title	Bruce Freeman Rail Trail Phase 2C		
Calculated By	CTW	**Checked By**	

Item 816.01 **Traffic Signal Reconstruction Location No. 1** **LS**

No. Required
1

Say **1** **LS**

GPI Calculations

Greenman-Pedersen, Inc.

Location	Concord	**Job Number**	MAX-2010031 (605189)
Title	Bruce Freeman Rail Trail Phase 2C		
Calculated By	CTW	**Checked By**	

Item 816.80 **Traffic Control Signal Removed And Stacked** **LS**

No. Required
1

Say **1** **LS**

GPI Calculations

Greenman-Pedersen, Inc.

Location	Concord	**Job Number**	MAX-2010031 (605189)
Title	Bruce Freeman Rail Trail Phase 2C		
Calculated By	CTW	**Checked By**	

Item 816.81 **Temporary Traffic Control Signal** **LS**

No. Required
1

Say **1** **LS**

GPI Calculations

Greenman-Pedersen, Inc.

Location	Concord	**Job Number**	MAX-2010031 (605189)
Title	Bruce Freeman Rail Trail Phase 2C		
Calculated By	CTW	**Checked By**	

Item 824.01 **Rectangular Rapid-Flash Beacons, Location No. 1** **LS**

Location #	No. Required
1	1

Say **1** **LS**

GPI Calculations

Greenman-Pedersen, Inc.

Location	Concord	**Job Number**	MAX-2010031 (605189)
Title	Bruce Freeman Rail Trail Phase 2C		
Calculated By	CTW	**Checked By**	

Item 824.02 **Rectangular Rapid-Flash Beacons, Location No. 2** **LS**

Location #	No. Required
2	1

Say **1** **LS**

GPI Calculations

Greenman-Pedersen, Inc.

Location	Concord	**Job Number**	MAX-2010031 (605189)
Title	Bruce Freeman Rail Trail Phase 2C		
Calculated By	CTW	**Checked By**	

Item 824.03 **Rectangular Rapid-Flash Beacons, Location No. 3** **LS**

Location #	No. Required
3	1

Say **1** **LS**

GPI Calculations

Greenman-Pedersen, Inc.

Location	Concord	**Job Number**	MAX-2010031 (605189)
Title	Bruce Freeman Rail Trail Phase 2C		
Calculated By	CTW	**Checked By**	

Item 826.25 **Surveillance Camera** **LS**

For Massachusetts Correctional Institution

No. Required
1

Say **1** **LS**

GPI Calculations

Greenman-Pedersen, Inc.

Location	Concord	**Job Number**	MAX-2010031 (605189)
Title	Bruce Freeman Rail Trail Phase 2C		
Calculated By	CTW	**Checked By**	

Item 826.7	**Electric Service Relocation**				**EA**
		Say	**1**	**EA**	

GPI Calculations

Greenman-Pedersen, Inc.

Location	Concord	**Job Number**	MAX-2010031 (605189)
Title	Bruce Freeman Rail Trail Phase 2C		
Calculated By	CTW	**Checked By**	

Item 826.8	**Telegraph Pole Overhead Wire Removed and Discarded**	**LS**

Say	**1**	**LS**

GPI Calculations

Greenman-Pedersen, Inc.

Location	Concord	**Job Number**	MAX-2010031 (605189)
Title	Bruce Freeman Rail Trail Phase 2C		
Calculated By	CTW	**Checked By**	

Item 826.95	**HVAC Condenser Removed and Stacked**				**LS**
		Say	**1**	**LS**	

GPI Calculations

Greenman-Pedersen, Inc.

Location	Concord	**Job Number**	MAX-2010031 (605189)
Title	Bruce Freeman Rail Trail Phase 2C		
Calculated By	CTW	**Checked By**	

Item 832. **Warning-Regulatory And Route Marker - Alum. Panel (Type A)** **SF**

Identification	Unit Area (SF)	Supports	No. Required	
R1-1	6.25	10 P5	10	62.50
R1-1(B)	2.25	7 P5	7	15.75
R2-1(20)	5.00	1 P5	1	5.00
R3-2	6.25	2 P5	3	18.75
		1 on Mast Arm		
R3-3	4.00	MNT w/R3-2	1	4.00
R3-5a	7.50	1 P5	1	7.50
R3-7R	6.25	2 P5	2	12.50
R5-1	6.25	2 P5	2	12.50
R5-3	4.00	15 P5	15	60.00
R5-10a(sp)	7.50	2 P5	2	15.00
R5-10b(sp)	3.75	2 P5	2	7.50
R6-1 (PBS)	2.50	MNT w/R5-1	2	5.00
R6-2L	3.00	1 P5	1	3.00
R6-2R	3.00	MNT BTB w/R6-2L	1	3.00
R7-8	1.50	4 P5	4	6.00
R7-8P	1.13	MNT BTB w/R7-8	4	4.52
R8-3a	4.00	5 P5	5	20.00
R8-10a	1.50	2 P5	2	3.00
R8-10b(sp)	4.50	2 P5	2	9.00
R9-5	1.50	On Signal post	1	1.50
R10-22	2.25	1 P5	1	2.25
R15-1	6.00	On Signal Post	2	12.00
R15-2P	2.30	On Signal Post	2	4.60
W1-4L	6.25	1 P5	1	6.25
W1-4R	6.25	5 P5	5	31.25
W2-1	2.25	10 P5	10	22.50
W3-1	6.25	2 P5	2	12.50
W3-1 (B)(on Path)	2.25	7 P5	7	15.75
W3-3	2.25	1 P5	1	2.25
W10-1	7.10	2 P5	2	14.20
W11-5	6.25	MNT w/W2-1	2	12.50
W11-15	6.25	13 2-P5	13	81.25
W11-15P	3.00	MNT w/W11-15	13	39.00
W16-6pL	3.00	MNT w/W11-15	1	3.00

GPI Calculations

Greenman-Pedersen, Inc.

Location	Concord	**Job Number**	MAX-2010031 (605189)
Title	Bruce Freeman Rail Trail Phase 2C		
Calculated By	CTW	**Checked By**	

Item 832. **Warning-Regulatory And Route Marker - Alum. Panel (Type A)** **SF**
(Continued)

Identification	Unit Area (SF)	Supports	No. Required	
W16-6pR	3.00	MNT w/W11-15	1	3.00
W16-7pL	2.00	MNT on 15' Signal Post	6	12.00
W16-7pR	2.00	2 MNT w/W11-15	2	4.00
W16-9P	2.00	MNT w/W11-15	7	14.00
SP-1	2.00	23 P5	23	46.00
SP-2	5.00	2 P5	2	10.00
SP-3	1.50	6 P5	6	9.00
SP-4	5.00	7 2-P5	7	35.00
M4-5	0.33	1 MNT w/SP-4	3	0.99
		2 MNT w/D3-1-1		
M4-6	0.50	MNT w/D11-1	2	1.00
M4-14	0.50	MNT w/D11-1	2	1.00
M6-3	2.19	MNT w/SP-4	1	2.19
M6-1L	2.19	1 MNT w/R&R SIGN	2	4.38
		1 MNT w/D11-1		
M6-1R	2.19	1 MNT w/R&R SIGN	2	4.38
		1 MNT w/D11-1		
I-13a	0.94	On Signal Post	2	1.88
D11-1	3.00	6 P5	6	18.00

For Item 847.1 = 124 Total = 702
For Item 848.1 = 20

Say 710 SF

GPI Calculations

Greenman-Pedersen, Inc.

Location	Concord	**Job Number**	MAX-2010031 (605189)
Title	Bruce Freeman Rail Trail Phase 2C		
Calculated By	CTW	**Checked By**	

Item 832.1 **Trail Rules Sign** **EA**

Identification	Supports	No. Required
SP-5	mount with SP-4	6

Total = 6

Say 6 EA

GPI Calculations

Greenman-Pedersen, Inc.

Location	Concord	**Job Number**	MAX-2010031 (605189)
Title	Bruce Freeman Rail Trail Phase 2C		
Calculated By	CTW	**Checked By**	

Item 833.5 **Demountable Reflectorized Delineator - Guard Rail** **EA**

On Straight runs of guardrail, delineators shall be installed on every tenth guardrail post.
Each post is spaced 6.25' apart, so delineators are located 62.5' apart.

From Item 620.1= 263 FT

Total Length = 263 FT

Delineators Required = 4 EA

Say 5 EA

GPI Calculations

Greenman-Pedersen, Inc.

Location	Concord	**Job Number**	MAX-2010031 (605189)
Title	Bruce Freeman Rail Trail Phase 2C		
Calculated By	CTW	**Checked By**	

Item 833.7	**Delineation For Guard Rail Termini**	**EA**
	From Item 627.1	2
	Total =	2

Say 5 EA

GPI Calculations

Greenman-Pedersen, Inc.

Location	Concord	**Job Number**	MAX-2010031 (605189)
Title	Bruce Freeman Rail Trail Phase 2C		
Calculated By	CTW	**Checked By**	

Item 847.1 **Sign Sup (N/Guide)+Rte Mkr W/1 Brkway Post Assembly - Steel** **EA**

From Item 832.	124
From Item 874.	4
From Item 874.75	3
Total =	131

Say **135** **EA**

GPI Calculations

Greenman-Pedersen, Inc.

Location	Concord	**Job Number**	MAX-2010031 (605189)
Title	Bruce Freeman Rail Trail Phase 2C		
Calculated By	CTW	**Checked By**	

Item 848.1	**Sign Sup (N/Guide)+Rte Mkr W/2 Brkway Post Assemblies-Steel**	**EA**
	From Item 832.	20
	Total =	20

Say 20 EA

GPI Calculations

Greenman-Pedersen, Inc.

Location	Concord	**Job Number**	MAX-2010031 (605189)
Title	Bruce Freeman Rail Trail Phase 2C		
Calculated By	CTW	**Checked By**	

Item 850.41 **Roadway Flagger** **HR**

Assume 2 Roadway Flaggers needed for 1 month for setting up work zones.

1	Months	X	4.33	Weeks / Month	X	5	Days / Week	=	22	Days
22	Days	X	8	Hours / Day	X	2	Flaggers	=	346	HR

Say **350** **HR**

GPI Calculations

Greenman-Pedersen, Inc.

Location	Concord	**Job Number**	MAX-2010031 (605189)
Title	Bruce Freeman Rail Trail Phase 2C		
Calculated By	CTW	**Checked By**	

Item 852. **Safety Signing For Traffic Management** **SF**

(Note: Quantity is for estimating purpose only.
Quantity varied pending field condition and as directed by the Engineer.
Quantity based on assuming no more than 1 section of sidewalk will be closed and 2 work zones at the same time.)

Sign ID	Unit Area	# Required	Total Sign Area (SF)
M4-9bL	5.00	1	5.00
M4-9bR	5.00	1	5.00
R1-6	3.00	2	6.00
R2-10a	12.00	12	144.00
R2-10e	12.00	12	144.00
R4-7	6.25	2	12.50
R9-10L	8.00	1	8.00
R9-10R	8.00	1	8.00
R9-11aL	8.00	1	8.00
R9-11aR	8.00	1	8.00
R10-6	6.00	2	12.00
W1-4L	6.25	2	12.50
W1-4R	6.25	2	12.50
W3-3	6.25	2	12.50
W5-1	9.00	4	36.00
W8-1	6.25	2	12.50
W8-3	9.00	2	18.00
W8-8	6.25	2	12.50
W8-8	6.25	2	12.50
W11-2	6.25	6	37.50
W13-1	5.00	2	10.00
W16-7pL	2.00	2	4.00
W16-7pR	2.00	2	4.00
W16-9p	2.00	2	4.00
W20-1(AHEAD)	9.00	13	117.00
W20-4(1000)	9.00	4	36.00
W20-7a	9.00	4	36.00
W20-8	9.00	4	36.00
W21-5a	6.25	1	6.25
			780.25

Say **790** **SF**

GPI Calculations

Greenman-Pedersen, Inc.

Location	Concord	**Job Number**	MAX-2010031 (605189)
Title	Bruce Freeman Rail Trail Phase 2C		
Calculated By	CTW	**Checked By**	

Item 853.1 **Portable Breakaway Barricade Type III** **EA**

Estimate 7 will be needed for Temporary Traffic Control use.

Add 2 for Beginning and End of Portion of BFRT 2C

Say **9** **EA**

GPI Calculations

Greenman-Pedersen, Inc.

Location	Concord	**Job Number**	MAX-2010031 (605189)
Title	Bruce Freeman Rail Trail Phase 2C		
Calculated By	CTW	**Checked By**	

Item 853.2 **Temporary Barrier** **FT**

Stage	Estimated Length of Barrier Required
1	283
2	179
3	0
	462

Say **500** **FT**

GPI Calculations

Greenman-Pedersen, Inc.

Location	Concord	**Job Number**	MAX-2010031 (605189)
Title	Bruce Freeman Rail Trail Phase 2C		
Calculated By	CTW	**Checked By**	

Item 853.21 **Temporary Barrier Removed And Reset** **FT**

Stage	Estimated Length of Barrier Required
1	0
2	283
3	319
	602

Say **650** **FT**

GPI Calculations

Greenman-Pedersen, Inc.

Location	Concord	**Job Number**	MAX-2010031 (605189)
Title	Bruce Freeman Rail Trail Phase 2C		
Calculated By	CTW	**Checked By**	

Item 853.3 **Temporary Restrained Barrier** **FT**

Stage	Estimated Length of Barrier Required
1	0
2	240
3	0
	240

Say **250** **FT**

GPI Calculations

Greenman-Pedersen, Inc.

Location	Concord	**Job Number**	MAX-2010031 (605189)
Title	Bruce Freeman Rail Trail Phase 2C		
Calculated By	CTW	**Checked By**	

Item 853.41 **Temp.Imp.Attenuator For Shldr, Incapable Of Redirection** **EA**

Stage	Number Required
1	2
2	1
3	0
	3

Say 3 EA

GPI Calculations

Greenman-Pedersen, Inc.

Location	Concord	**Job Number**	MAX-2010031 (605189)
Title	Bruce Freeman Rail Trail Phase 2C		
Calculated By	CTW	**Checked By**	

Item 853.411 **Temp.Imp.Attenuator For Shldr, Incapable Of Redirection R&R** **EA**

Stage	Number Required
1	0
2	2
3	2
	4

Say **4** **EA**

GPI Calculations

Greenman-Pedersen, Inc.

Location	Concord	**Job Number**	MAX-2010031 (605189)
Title	Bruce Freeman Rail Trail Phase 2C		
Calculated By	CTW	**Checked By**	

Item 854.016 **Temporary Paving Markings - 6 Inch (Painted)** **FT**

Temporary 6" pavement markings to be used during staging:

Stage	Total by Stage
1	200
2	200
3	100
Contingency	500
	1,000

Say **1,000** **FT**

GPI Calculations

Greenman-Pedersen, Inc.

Location	Concord	**Job Number**	MAX-2010031 (605189)
Title	Bruce Freeman Rail Trail Phase 2C		
Calculated By	CTW	**Checked By**	

Item 854.1 **Pavement Marking Removal** **SF**

Assumed Qty as directed by the Engineer for removal of existing markings that conflict with construction staging and at project limits.

Say	**500**	**SF**

GPI Calculations

Greenman-Pedersen, Inc.

Location	Concord	**Job Number**	MAX-2010031 (605189)
Title	Bruce Freeman Rail Trail Phase 2C		
Calculated By	CTW	**Checked By**	

Item 856.12 **Portable Changeable Message Sign** **DAY**

Assume 2 units for Powder Mill Road and 2 units for Main St.

2	units	x	14	months	x	4.25	weeks / month	x	5	day / week	= 595
2	units	x	6	months	x	4.25	weeks / month	x	5	day / week	= 255
										Total=	850
							Say		**850**		**DAY**

GPI Calculations

Greenman-Pedersen, Inc.

Location	Concord	**Job Number**	MAX-2010031 (605189)
Title	Bruce Freeman Rail Trail Phase 2C		
Calculated By	CTW	**Checked By**	

Item 859. **Reflectorized Drum** **DAY**

Assume 1 work zones per day, each zone 300' long, will require a total of 17 drums/day
Assume 2 month construction duration

Estimate number of drums will be used: 20 drums

20	drums X	2	months X	4.25	weeks / month	X	5	days / week	=	850

From TTCP Staging

Maximum # of Drums 30

30	drums X	12	months X	4.25	weeks / month	X	5	days / week	=	7,650

Say **8,500** **DAY**

GPI Calculations

Greenman-Pedersen, Inc.

Location	Concord	**Job Number**	MAX-2010031 (605189)
Title	Bruce Freeman Rail Trail Phase 2C		
Calculated By	CTW	**Checked By**	

Item 864.04 **Pavement Arrows And Legends Refl. White (Thermoplastic)** **SF**

(Note: "Bicycle XING" is approximately 30 SF)
"HWY XING" is approximately 30 SF)
"Bicycle Lane Symbol" is approximately 15 SF)
"Bike Symbol" is approximately 3 SF)
"Arrow Only" is approximately 46 SF)
"Handicap symbol" is approximately 3 SF)
"Railroad Grade Xing" is approximately 30SF)

Street Name	Bicycle XING	HWY XING	Bike Lane Symbol	Bike Symbol	RR XING		
STA. 63+00 BFRT	30 x 0	30 x 2	15 x 0	3 x 0	30 x 0	=	60 sf
STA. 70+00 BFRT	30 x 0	30 x 2	15 x 0	3 x 0	30 x 0	=	60 sf
BFRT @ Williams Rd.	30 x 1	30 x 2	15 x 0	3 x 0	30 x 0	=	90 sf
BFRT @ Old Marlboro Rd	30 x 2	30 x 2	15 x 0	3 x 0	30 x 0	=	120 sf
BFRT @ W. Concord Cen	30 x 0	30 x 1	15 x 4	3 x 5	30 x 0	=	105 sf
BFRT @ Beharrell	30 x 0	30 x 2	15 x 0	3 x 0	30 x 0	=	60 sf
BFRT @ Winthrop St.	30 x 0	30 x 2	15 x 0	3 x 0	30 x 0	=	60 sf
BFRT @ Comm. Ave.	30 x 2	30 x 2	15 x 0	3 x 0	30 x 0	=	120 sf
BFRT @ Grade Crossing	30 x 0	30 x 0	15 x 0	3 x 0	30 x 2	=	60 sf

Street Name	Arrow Only	Handicap Symbol		
BFRT @ W. Concord Cen	46 x 3	3 x 0	=	138 sf
BFRT @ Beharrell	46 x 0	3 x 3	=	9 sf
BFRT @ Comm. Ave.	46 x 0	3 x 1	=	3 sf

Total = 885

Say **900** **SF**

GPI Calculations

Greenman-Pedersen, Inc.

Location	Concord	**Job Number**	MAX-2010031 (605189)
Title	Bruce Freeman Rail Trail Phase 2C		
Calculated By	CTW	**Checked By**	

Item 865.1 **Cross Walks And Stop Lines Refl. White (Thermoplastic)** **SF**

Intersection		Stop Line	Crosswalk			SF
STA. 63+00 BFRT	Road Wb	13' x1'	104'	x2'	=	293
	Road EB	12' x1'	60'	x1'		
STA. 70+00 BFRT	Road Wb	7' x1'	49'	x2'	=	141
	Road EB	7' x1'	29'	x1'		
BFRT	Road Wb	15' x1'	204'	x2'	=	525
@ Williams Rd.	Trail NB	7' x1'	90'	x1'		
	Trail SB	5' x1'				
BFRT	Trail NB	5' x1'	186'	x2'	=	458
@ Old Marlboro Rd	Trail SB	5' x1'	76'	x1'		
Main St	Road WB	0' x1'	82'	x2'	=	499
@ Shopping Driveway			75'	x1'		
	Road SB	0' x1'	78'	x2'		
			104'	x1'		
Main St.	Main WB	27' x1'	124'	x2'	=	771
@ Comm. Ave.			94'	x1'		
(W. Concord Center)	Main EB	17' x1'				
	Trail NB	19' x1'				
	Comm. SB	19' x1'	99'	x2'		
			98'	x1'		
	Gore Area		51'	x1'		
BFRT	Trail	5' x1'	160'	x2'	=	440
@ MBTA Parking			115'	x1'		
BFRT	Road Wb	15' x1'	96'	x2'	=	276
@ Beharell	Road EB	17' x1'	52'	x1'		
BFRT	Road Wb	12' x1'	118'	x2'	=	334
@ Winthrop St.	Road EB	12' x1'	74'	x1'		
BFRT	Trail NB	5' x1'	135'	x2'	=	347
@ Comm. Ave.	Trail SB	5' x1'	67'	x1'		
Grade Crossing	Trail NB	8' x1'		x2'	=	16
	Trail SB	8' x1'		x1'		

Total = 4,100

Say **4,100** **SF**

GPI Calculations

Greenman-Pedersen, Inc.

Location	Concord	**Job Number**	MAX-2010031 (605189)
Title	Bruce Freeman Rail Trail Phase 2C		
Calculated By	CTW	**Checked By**	

Item 866.04 **4 Inch Reflectorized White Line (Thermoplastic)** **FT**

	SWEL (L)	SWEL (R)	SWLL	SWL	DWL	
Main St. (Route 62)				740'	112' / 4 = 28'	768'
Comm. Ave.				145'		145'
Comm. Ave. Parking				415'		415'
MBTA Parking				360'		360'
Beharrell Parking				878'		878'
Wood Hill Parking				401'		401'
BFRT STA. 126+65 To 128+08				139'		139'
BFRT STA. 126+70 To 129+36				270'		270'
					Total =	3,376

Say **3,400** **FT**

GPI Calculations

Greenman-Pedersen, Inc.

Location	Concord	**Job Number**	MAX-2010031 (605189)
Title	Bruce Freeman Rail Trail Phase 2C		
Calculated By	CTW	**Checked By**	

Item 867.04 **4 Inch Reflectorized Yellow Line (Thermoplastic)** **FT**

Street Location	Description YCL	DYCL				
STA. 63+00 BFRT	366'					366'
STA. 70+00 BFRT	366'					366'
BRFT @ Williams Rd.	366'					366'
BRFT @ Old Marlboro Rd.	366'					366'
West Concord Center	183'	370'	x	2	= 740'	923'
BFRT STA. 126+69 To 129+49	281'					281'
BRFT @ Beharrell	366'					366'
BRFT @ Winthrop St.	366'					366'
BRFT @ Comm. Ave.	366'					366'
NB @ Grade Crossing	25'					25'
SB @ Grade Crossing	45'					45'

Total = 3,836

Say **3,900** **FT**

GPI Calculations

Greenman-Pedersen, Inc.

Location	Concord	**Job Number**	MAX-2010031 (605189)
Title	Bruce Freeman Rail Trail Phase 2C		
Calculated By	CTW	**Checked By**	

Item 874. **Street Name Sign** **EA**

Identification	Description	Supports	
D3-1	"Powder Mill Rd"	2 P5	2
D3-2	"Williams Rd"	1 P5	1
D3-3	"Commonwealth Ave"	1 P5	1
	For Item 847.1 =	4	Total = 4

Say 4 EA

GPI Calculations

Greenman-Pedersen, Inc.

Location	Concord	**Job Number**	MAX-2010031 (605189)
Title	Bruce Freeman Rail Trail Phase 2C		
Calculated By	CTW	**Checked By**	

Item 874.45 **Traffic Sign Removed and Discarded** **EA**

Station			Description	
76+33	RT	BFRT 2C	Stop ahead; "williams RD"	2
124+04	RT	BFRT 2C	Right Lane Must Turn Right	1
124+59	RT	BFRT 2C	Right Lane Must Turn Right	1
126+85	LT	BFRT 2C	No U-Turn	1
125+19	LT	BFRT 2C	No Left Turn;"Speed Limit 20"	2
124+70	RT	BFRT 2C	Commonwealth Ave.	1
124+67	LT	BFRT 2C	Stop Here On Red	1
124+20	LT	BFRT 2C	No Left Rurn Symbol;"No left Turn";"No Turn On Red";"No Parking"	4
124+61	LT	BFRT 2C	Do not Enter	1
124+64	LT	BFRT 2C	Stop	1
128+06	RT	BFRT 2C	Club Car Café Parking Violators Will Towed	1
129+00	RT	BFRT 2C	Parking For Woods Hill Table Only	1

Total = 17

Say **20** **EA**

GPI Calculations

Greenman-Pedersen, Inc.

Location	Concord	**Job Number**	MAX-2010031 (605189)
Title	Bruce Freeman Rail Trail Phase 2C		
Calculated By	CTW	**Checked By**	

Item 874.75 **Miscellaneous Signs Removed And Reset** **EA**

Sta.			Description	Supports		
127+39	LT	BFRT 2C	CLUB CAR CAFE CUSTOMER PARKING ONLY	1	P5	1
128+64	RT	BFRT 2C	PARKING FOR WOODS HILL TABLE ONLY	1	P5	1
129+30	RT	BFRT 2C	PARKING FOR WOODS HILL TABLE ONLY	1	P5	1

For Item 847.1 = 3

Total = 3

Say 3 EA

GPI Calculations **Greenman-Pedersen, Inc.**

Location Concord **Job Number** MAX-2010031 (605189)
Title Bruce Freeman Rail Trail Phase 2C
Calculated By **Checked By**

Item 901. **4000 Psi, 1.5 In., 565 Cement Concrete** **CY**

For field stone masonry headwalls

Station	Offset	Pipe Diameter		Volume Required
81+00.00	LT	30"		2.63
81+20.00	RT	30"		2.63
			Total =	5.26

Say 6 CY

GPI Calculations **Greenman-Pedersen, Inc.**

Location Concord **Job Number** MAX-2010031 (605189)
Title Bruce Freeman Rail Trail Phase 2C
Calculated By _____ **Checked By** _____

Item 901.3 **4000 Psi, 1.5 In., 565 Cement Concrete For Post Foundation** **CY**

From Item 645.172= 70 posts

Each Post Foundation is 3 feet high with a diameter of 12"

Total CF = 659.73

$$762 \text{ CF} \times \frac{1}{27 \text{ CF/CY}} = 28 \text{ CY}$$

Say 30 CY

GPI Calculations **Greenman-Pedersen, Inc.**

Location Concord **Job Number** MAX-2010031 (605189)
Title Bruce Freeman Rail Trail Phase 2C
Calculated By **Checked By**

Item 903. **3000 Psi, 1.5 In., 470 Cement Concrete** **CY**

For Thrust Blocks

For Bends Each Thrust Block is 12 SF

Assume a Length of 4ft for each Thrust Block

	Quantity	SF	CF	CY
From Item 309. For Bends	4	48	192	7.111111

For Low Retaining Wall:

						CY
0.247	CY for LF	x	51.3	=		12.6711
				Total =		19.78221
			Say	**20**		**CY**

GPI Calculations

Greenman-Pedersen, Inc.

Location Concord **Job Number** MAX-2010031 (605189)
Title Bruce Freeman Rail Trail Phase 2C
Calculated By **Checked By**

Item 910.1 **Steel Reinforcement For Structures - Epoxy Coated** **LB**

	Quantity	LBs each		Total LBs
For field stone masonry headwalls	2	35		70
			Total =	70
		Say	**70**	**LB**

GPI Calculations

Greenman-Pedersen, Inc.

Location	Concord	**Job Number**	MAX-2010031 (605189)
Title	Bruce Freeman Rail Trail Phase 2C		
Calculated By		**Checked By**	

Item 950.1 **Temporary Shoring** **LS**

From Bridge Estimate

Say	**1**	**LS**

GPI Calculations **Greenman-Pedersen, Inc.**

Location	Concord	**Job Number**	MAX-2010031 (605189)
Title	Bruce Freeman Rail Trail Phase 2C		
Calculated By		**Checked By**	

Item 955.1 **Removal and Replacement of Timber Cross Tie** **EA**

For use at Rail-Highway Crossing (AARDOT XXX-XXXX)

Say 8 EA

GPI Calculations

Greenman-Pedersen, Inc.

Location Concord **Job Number** MAX-2010031 (605189)
Title Bruce Freeman Rail Trail Phase 2C
Calculated By _____ **Checked By** _____

Item 983.52 **Modified Rock Fill** **CY**

For Modified Rockfill Sta. 15+00 to 16+75 = 1,165 SF
= 129 SY

129 SY X $\frac{2 \text{ FT}}{3 \text{ FT/YD}}$ = 86 CY

Say 90 CY

GPI Calculations

Greenman-Pedersen, Inc.

Location	Concord	**Job Number**	MAX-2010031 (605189)
Title	Bruce Freeman Rail Trail Phase 2C		
Calculated By		**Checked By**	

Item 995.011 **Culvert Structure, Culvert No. C-19-015 (XXX)** **LS**

From Bridge Estimate

Say	**1**	**LS**

GPI Calculations **Greenman-Pedersen, Inc.**

Location Concord **Job Number** MAX-2010031 (605189)
Title Bruce Freeman Rail Trail Phase 2C
Calculated By **Checked By**

Item 995.02 **Bridge Structure, Bridge No. C-19-031 (XXX)** **LS**

From Bridge Estimate

Say 1 LS

GPI Calculations

Greenman-Pedersen, Inc.

Location	Concord	**Job Number**	MAX-2010031 (605189)
Title	Bruce Freeman Rail Trail Phase 2C		
Calculated By		**Checked By**	

Item 995.03 **Bridge Structure, Bridge No. C-19-032 (A5R)** **LS**

From Bridge Estimate

Say	**1**	**LS**