SITE LEGEND

EXISTING	NEW	DESCRIPTION
D	D	STORM DRAIN
E	E	ELECTRIC (UNDERGROUND)
RD	RD	ROOF DRAIN
DS	DS	DOWNSPOUT DRAIN
G	G	GAS
OHW	OHW	OVERHEAD WIRE
PL	PL	PROPERTY LINE
S	S	SANITARY SEWER
GW	GW	GARAGE WASTE
W	W	DOMESTIC WATER SERVICE
F	F	FIRE SERVICE
	EP	UNDERGROUND ELECTRIC PRIMARY SERVICE
	ES	UNDERGROUND ELECTRIC SECONDARY SERVICE
	T	UNDERGROUND TELEPHONE SERVICE
	CTV/F	UNDERGROUND CABLE TV & FIBER OPTIC
	SL	UNDERGROUND SITE LIGHTING SERVICE
	FA	UNDERGROUND FIRE ALARM SERVICE
64	64	CONTOUR
	BCC	BITUMINOUS CONC. CURB
	CCB	CAPE COD BERM
	PCC	PRECAST CONC. CURB
	SGC	SLOPED GRANITE CURB
	VGC	VERTICAL GRANITE CURB
x64.0	x64.75	SPOT GRADE
		CHAINLINK FENCE
		CONSTRUCTION CHAINLINK FENCING
	DMH	DRAIN MANHOLE
	FES	FLARED END STRUCTURE
	SMH	SEWER MANHOLE
	CB	CATCH BASIN
	CB(DG)	DOUBLE GRATE CATCH BASIN
		UTILITY POLE
CTB	CTB	CONCRETE THRUST BLOCK
HYD		FIRE HYDRANT
GV	GV	GATE VALVE AND CURB BOX
		HANDICAP SYMBOL (PRKG. SPACE)
		HEADWALL
		ELECTRIC MANHOLE
		TELEPHONE MANHOLE
	PB	ELECTRIC PULL BOX
		SIGHT LIGHT POLE
	FDC	FIRE DEPARTMENT CONNECTION
		WETLAND
		BORING LOCATION
TP	TP	TEST PIT LOCATION
	C.T.E.	POINT OF CONNECTION TO EXISTING
	E.T.R.	EXISTING TO REMAIN
F.F.E.	F.F.E.	FINISH FLOOR ELEVATION (FIRST FLOOR)
	F&I	FURNISH AND INSTALL
	GCO	GROUND CLEANOUT
INV.	INV.	INVERT ELEVATION
	N.T.S.	NOT TO SCALE
	WQS	WATER QUALITY STRUCTURE
	V.I.F.	VERIFY IN FIELD
		TRAFFIC FLOW DIRECTION
	R&D	REMOVE & DISPOSE
	R&R	REMOVE & REPLACE
	×	REMOVE & DISPOSE
		ABANDON EXIST'G. UTILITY IN PLACE
		REMOVE & DISPOSE OF EXIST'G. UTILITY
	CLDI	CEMENT LINED DUCTILE IRON
	HDPE	HIGH DENSITY POLYETHYLENE
	PVC	POLYVINYL CHLORIDE
	RCP	REINFORCED CONCRETE PIPE
VC		VITRIFIED CLAY PIPE
AC		ASBESTOS CONCRETE PIPE

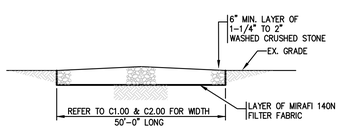

1 / C0.1 SITE ENTRANCE MAT DETAIL
N.T.S.
NOTE: IN THE EVENT THE CONTRACTOR IS TO INCLUDE ADDITIONAL SITE ENTRANCES ONTO THE PROJECT SITE, THE CONTRACTOR SHALL FURNISH & INSTALL AT NO ADDITIONAL COST TO THE OWNER AND SHALL CONFORM WITH THE SITE ENTRANCE MAT DETAIL.

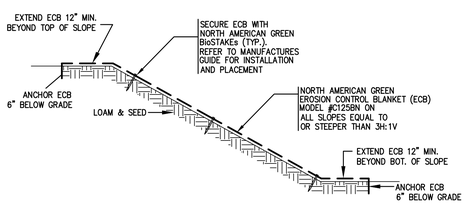

2 / C0.1 SLOPE PROTECTION TREATMENT DETAIL
N.T.S.

GENERAL NOTES

1. EXISTING CONDITIONS SHOWN WERE TAKEN FROM EXISTING CONDITIONS PLAN PREPARED BY SNELLING & HAMEL ASSOCIATES, INC. FOR THE TOWN OF CONCORD DATED NOVEMBER 27, 2013.
2. CONTRACTOR SHALL RETAIN THE SERVICES OF A REGISTERED LAND SURVEYOR TO LAYOUT ON THE GROUND ALL NEW ELEMENTS OF WORK. THE NEW WORK IS TO BE COMPLETED, MARKED, AND LAID OUT ON THE GROUND, REVIEWED AND APPROVED BY THE ARCHITECT PRIOR TO INSTALLATION. IF ANY WORK IS INSTALLED PRIOR TO THE ABOVE REQUIREMENT BEING MET, AND IF THE WORK IS NOT SATISFACTORY IN LAYOUT TO THE ARCHITECT, CONTRACTOR SHALL REPLACE THE WORK AT NO COST.
3. PRIOR TO ANY EXCAVATION, IN ADDITION TO "DIG SAFE", NOTIFY APPROPRIATE UTILITY COMPANY OR AUTHORITY TO VERIFY EXACT DEPTH AND LOCATION OF EXISTING UNDERGROUND UTILITIES. LOCATIONS AND DEPTHS OF EXISTING UTILITIES SHOWN ARE APPROXIMATE ONLY AND THE CONTRACTOR SHALL BE RESPONSIBLE TO LOCATE AND PROTECT UTILITIES IN THE FIELD WHETHER OR NOT SHOWN ON THE DRAWINGS.
4. THE DOCUMENTS MAY INDICATE RESULTS OF BORINGS AND/OR TEST PITS. THESE INVESTIGATIONS AND RESULTANT INTERPRETATIONS WERE MADE FOR THE SOLE PURPOSE OF PROVIDING DESIGN DATA FOR THE USE OF THE DESIGN TEAM ONLY. INTERPRETATION OF THE DATA FOR PURPOSES OF CONSTRUCTION IS THE SOLE RESPONSIBILITY OF THE CONTRACTOR. DURING THE COURSE OF CONSTRUCTION, ALL INTERPRETATIONS OF SOIL SUITABILITY SHALL BE MADE BY THE ARCHITECT. THE DECISION OF THE ARCHITECT SHALL BE FINAL AND BINDING ON THE CONTRACTOR.
5. REFER TO THE SPECIFICATIONS. IN ADDITION TO THOSE REQUIREMENTS, SITE PREPARATION SHALL ALSO INCLUDE THE FOLLOWING:
   A. IN THE COURSE OF INSTALLING THE UNDERGROUND UTILITIES, REMOVE ANY ABANDONED FOUNDATION, UTILITY STRUCTURES, ETC., ENCOUNTERED WHICH INTERFERE WITH THE UTILITY WORK. ALL SUCH STRUCTURES SHALL BE COMPLETELY REMOVED AND SHALL BE BACKFILLED WITH GRAVEL COMPACTED IN 9" LIFTS TO 95% COMPACTION TO 6" BELOW THE BOTTOM OF THE PIPE AND UTILITY.
   B. IF DURING EXCAVATION THE TRENCH WIDTH EXCEEDS THE SUM OF THE PIPE O.D. PLUS 2'-0", PLACE AND COMPACT THE FILL TO 12" ABOVE THE PIPE AND RE-EXCAVATE TO REQUIRED GRADES.
   C. AT THE POINT WHERE BULK EARTH MOVING HAS BEEN COMPLETED TO THE SUBGRADE LEVEL AND PRIOR TO PLACING UTILITIES, CURBING, OR PAVING, PROOF ROLL THE ENTIRE AREA IN THE PRESENCE AND UNDER THE SUPERVISION OF THE SOILS LABORATORY. PROOF- ROLLING SHALL CONSIST OF MAKING NOT LESS THAN (5) PASSES OVER THE AREA WITH A VIBRATOR DRUM ROLLER WEIGHING AT LEAST 10,000 lbs. THE SOILS LAB WILL CONDUCT FIELD DENSITY TESTS AND WILL DETERMINE CORRECTIVE MEASURES TO BE DONE, IF ANY, BASED ON THE PROOF-ROLLING.
6. ALL UTILITY WORK SHALL BE PERFORMED IN ACCORDANCE WITH LOCAL TOWN SPECIFICATIONS.
7. WATER AND FIRE SERVICE PIPING SHALL BE CLASS 52 DOUBLE CEMENT LINED DUCTILE IRON WITH TYTON JOINTS. FITTINGS SHALL BE 350 LB. GREY IRON CASTINGS WITH MECHANICAL JOINT ENDS. ALL BENDS, TEES, ETC., SHALL BE JOINT RESTRAINED BY THE USE OF CONCRETE THRUST BLOCKS.
8. GATE VALVES SHALL BE CAST IRON BODY BRONZE MOUNTED, 200 PSI, COMPLETE WITH ROAD BOX AND CONFORMING IN EVERY RESPECT TO LOCAL SPECIFICATIONS.
9. STORM DRAINS 12" AND OVER SHALL BE ADS N-12 WATER TIGHT (WT) HDPE PIPE (H-20) WITH WATER TIGHT RUBBER GASKET JOINT UNLESS NOTED OTHERWISE. JOINTS SHALL MEET OR EXCEED ASTM D3212 LAB TEST AND ASTM C969 WATERTIGHT EXFILTRATION FIELD TEST.
10. SEWER PIPING AND STORM DRAINS 10" AND UNDER SHALL BE MANVILLE ASTM D-3034 SDR-35 P.V.C. SEWER PIPE WITH PUSH-ON RUBBER RING JOINTS. JOINTS SHALL MEET OR EXCEED ASTM F1417 WATERTIGHT FIELD TEST.
11. CONTRACTOR SHALL REFER TO SPECIFICATIONS AND DRAWINGS FOR PHASING OF PROJECT.
12. SEWER LINES SHALL BE INSTALLED AT MINIMUM 10 FOOT HORIZONTAL SEPARATION FROM ANY PROPOSED OR EXISTING WATER LINES.
13. WHENEVER SEWER LINES MUST CROSS WATER LINES THE SEWER SHALL BE INSTALLED SO THAT THE TOP OF THE SEWER IS AT LEAST 18 INCHES BELOW THE BOTTOM OF THE WATER MAIN. WHERE 18 INCH VERTICAL SEPARATION & 10 FEET HORIZONTAL SEPARATION CAN NOT BE MET AT WATER AND SEWER CROSSINGS, BOTH THE WATER AND SEWER PIPE SHALL BE CONSTRUCTED OF MECHANICAL JOINT CEMENT-LINED DUCTILE IRON PIPE FOR A DISTANCE OF 10 FEET ON EACH SIDE OF CROSSING. BOTH PIPES SHALL BE PRESSURE TESTED BY AN APPROVED METHOD TO ASSURE WATERTIGHTNESS.
14. WHENEVER NEW SEWER LINES CONNECT INTO EXISTING SEWER MANHOLES THE CONTRACTOR SHALL REBUILD THE SEWER MANHOLE CHANNEL TO ACCOMMODATE THE NEW CONNECTION.
15. WHENEVER UTILITIES OR STRUCTURES ARE TO BE INSTALLED WITHIN CITY/TOWN PUBLIC OR PRIVATE LAYOUT, THE EXCACATION SHALL BE BACKFILLED WITH FLOWABLE FILL. ALL AREAS OF ROADWAY PAVEMENT & WALKWAYS DISTURBED DURING CONSTRUCTION SHALL BE RE-PAVED PER LOCAL DPW STANDARDS.
16. WHENEVER ELECTRIC DUCT BANKS/CONDUITS MUST CROSS ANY UTILITY LINE SERVICE THE ELECTRIC DUCT BANKS/CONDUITS SHALL BE INSTALLED SO THAT THE BOTTOM OF THE ELECTRIC DUCT BANKS/CONDUITS ARE AT LEAST 12" ABOVE THE TOP OF THE UTILITY SERVICE. WHERE 12 INCH VERTICAL SEPARATION CAN NOT BE MET ABOVE THE TOP OF THE UTILITY SERVICE, THE ELECTRIC DUCT BANKS/CONDUITS SHALL BE RUN 12" BELOW THE BOTTOM OF THE UTILITY SERVICE.
17. CONTRACTOR SHALL MAKE PROVISIONS TO PROVIDE EXCAVATION AND BACKFILL SERVICES TO THE LOCAL GAS COMPANY FOR THE INSTALLATION OF NEW GAS SERVICE AND/OR THE THE REMOVAL OF EXISTING GAS SERVICES. COORDINATE ALL INSTALLATIONS AND REMOVAL OF GAS SERVICES WITH LOCAL GAS CO.
18. CONTRACTOR SHALL PREPARE AND SUBMIT THE EPA NOTICE OF INTENT (N.O.I.) FOR STORM WATER DISCHARGES ASSOCIATED WITH CONSTRUCTION ACTIVITY UNDER THE EPA NATIONAL POLLUTION DISCHARGE ELIMINATION SYSTEMS (NPDES) GENERAL PERMIT. CONTRACTOR SHALL DEVELOP AND IMPLEMENT A STORM WATER POLLUTION PREVENTION PLAN (SWPPP) PER THE REQUIREMENTS OF THE EPA GENERAL PERMIT. AT PROJECT COMPLETION CONTRACTOR SHALL SUBMIT A NOTICE OF TERMINATION (N.O.T.) TO THE EPA.
19. IN THE EVENT THE CONTRACTOR IS TO INSTALL TOP COURSE OF PAVEMENT 60 OR MORE DAYS AFTER INSTALLATION OF BINDER COURSE, THE CONTRACTOR SHALL INSTALL ALL CATCH BASIN GRATES AND MANHOLE COVERS AT GRADE WITH BINDER COURSE AND SHALL BE RESPONSIBLE FOR RAISING STRUCTURES TO FINISHED GRADE.

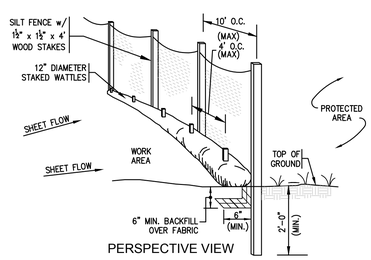

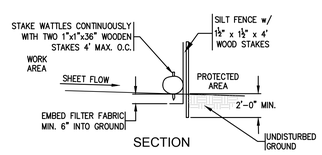

3 / C0.1 COMPOST WATTLE FILTER SOCK & FABRIC DETAIL
N.T.S.
NOTES:
1. FILTER SOCK SHALL BE 12" DIAMETER STRAW WATTLE BY NORTH AMERICAN GREEN OR APPROVED EQUAL.
2. SOCKS TO BE FILLED WITH COMPACTED STRAW OR APPROVED EQUAL.

EROSION & SEDIMENT CONTROL NARRATIVE

1. EROSION CONTROL MEASURES SHOWN HEREIN ARE A MINIMUM. CONTRACTOR SHALL FURNISH THE SERVICES OF AN INDEPENDENT PROFESSIONAL ENGINEER OR A CERTIFIED PROFESSIONAL IN EROSION AND SEDIMENT CONTROL TO PREPARE A STORMWATER POLLUTION PREVENTION PLAN (SWPPP). PRIOR TO COMMENCEMENT OF DEMOLITION SITE PREPARATION OR EARTHWORK SAID PLAN SHALL BE IMPLEMENTED. THE INITIAL METHOD OUTLINED IS INTENDED TO ROUTE ALL PRACTICABLE SURFACE WATER FROM THE EXCAVATION AREA INTO EROSION CONTROL FACILITIES. THE CONTRACTOR SHALL INSTALL ANY ADDITIONAL PROTECTIVE MEASURES AS MAY BE REQUIRED TO CONTROL EROSION AND SEDIMENT RUNOFF FROM THE SITE DURING CONSTRUCTION.
2. STAKE THE LIMIT OF WORK TO ENSURE THAT ALL WORK WILL BE INSIDE THE EROSION CONTROL FACILITY. THE LIMIT OF WORK WILL BE INDICATED BY ORANGE CONSTRUCTION MESH. THE MESH WILL INCLUDE BUILDINGS, PARKING FACILITIES, ACCESS ROADS, DETENTION/RETENTION BASINS, EQUIPMENT STAGING AREAS AND ALL MATERIAL STOCKPILE AND HANDLING AREAS.
3. PRIOR TO THE START OF ANY CONSTRUCTION ACTIVITIES ON SITE, A PRE-CONSTRUCTION CONFERENCE SHALL BE HELD ON SITE TO ESTABLISH SUPERVISORY AND INSPECTION PROCEDURES FOR SEDIMENT AND EROSION CONTROL MEASURES. THIS MEETING SHALL BE ATTENDED BY THE CONTRACTOR, APPLICANT/OWNER, ARCHITECT/ENGINEER AND THE LOCAL CONSERVATION AGENT.
4. THE CONTRACTOR SHALL BE TOTALLY RESPONSIBLE FOR PROTECTION OF ANY LANDS OR PROPERTIES AS MAY BE SUBJECT TO ANY AFFECT OR BY-PRODUCT OF HIS DEMOLITION/CONSTRUCTION EFFORT. SPECIAL CARE SHALL BE TAKEN TO AVOID EROSION OF FILL OR CUT SLOPES ONTO ADJACENT PROPERTIES OR DOWNSTREAM SILTATION OF DIVERSION OF EXISTING DRAINAGE. ANY DAMAGE IS TO BE CORRECTED IMMEDIATELY BY THE CONTRACTOR AT NO COST TO THE OWNER.
5. THE WORK IS TO BE PHASED. CONSTRUCT THE PROJECT IN PHASES AS DIRECTED BY THE ARCHITECT/ENGINEER TO SUIT THE PROJECT SCHEDULE.
6. GENERAL SEQUENCE SHALL BE AS FOLLOWS:
   A. ESTABLISH HAYBALE/SILT BARRIER & CONSTRUCTION FENCE PRIOR TO ANY EARTHWORK
   B. INSTALL SITE ENTRANCE MATS AT SITE CONSTRUCTION ENTRANCES AS DETAILED.
   C. CONSTRUCT TEMPORARY SETTLING BASINS AND INSTALL EROSION CONTROL DEVICES.
   D. CLEAN AND GRUB VEGETATION AS REQUIRED. REMOVE AND DISPOSE OF ALL STUMPS FROM SITE.
   E. PERFORM MASS EARTHWORK AND ROCK EXCAVATION FOR THE SITE.
   F. PROTECT ALL EXISTING AND PROPOSED DRAINAGE STRUCTURES FROM SEDIMENT BY THE USE OF DANDY BAGS AND HAY BALES AT CATCH BASIN AS DETAILED.
7. AT NO TIME SHALL SILT LADEN WATER BE ALLOWED TO ENTER ENVIRONMENTALLY SENSITIVE AREAS AND EXISTING OR NEW DRAINAGE SYSTEMS. RUNOFF FROM DISTURBED SURFACES SHALL BE DIRECTED THROUGH SETTLING BASINS AND EROSION CONTROL MEASURES PRIOR TO ENTERING ANY ENVIRONMENTALLY SENSITIVE AREAS OR THE DRAINAGE SYSTEM.
8. DEWATER ALL EXCAVATIONS AND TRENCHES, AS REQUIRED, WITH DEWATERING BAGS AND OUTFALLS AT CONTROLLED TEMPORARY SETTLING BASINS.
9. INSTALL STONE REINFORCED SILT BARRIER AROUND STOCKPILE AREAS, TRUCK WASH DOWN AREAS AND VEHICLE FUELING AREAS.
10. INSTALL TEMPORARY SEED OR MULCH AND EROSION CONTROL BLANKETS (ECB) TO ALL AREAS IMMEDIATELY UPON FORMATION OF GRADES.
11. SURFACE STABILIZATION MUST BE IMPLEMENTED WITHIN 14 DAYS AFTER CONSTRUCTION ACTIVITY IN A PORTION OF THE SITE THAT HAS CEASED OR IS TEMPORARILY HALTED.
12. TRUCK WASH DOWN AREA SHALL BE 20'(L)X20'(W) AT A MINIMUM SURROUNDED BY STONE REINFORCED SILT BARRIER. ACCUMULATED CONCRETE SHALL BE EITHER RECYCLED ON SITE OR DISPOSED OF AT AN APPROVED OFF-SITE LOCATION.
13. CONTRACTOR REFUELING AREA SHALL BE 20'(L)X20'(W) AT A MINIMUM SURROUNDED BY STONE REINFORCED SILT BARRIER. AREA SHALL BE SCRAPED AND REDRESSED MONTHLY. THE DEPTH SHALL BE DETERMINED IN THE FIELD. SCRAPED MATERIAL SHALL BE REMOVED AND DISPOSED OF AT AN APPROVED OFF-SITE LOCATION.
14. AS SOON AS PAVING OF DRIVES IS COMPLETED, ALL DRAINAGE STRUCTURES SHALL BE CLEANED OF ANY ACCUMULATED SEDIMENT. THEREAFTER, CLEAN UP SHOULD FOLLOW LONG TERM MAINTENANCE PLAN.
15. CONTINUALLY MONITOR ALL SILT BARRIER AND EROSION CONTROL DEVCES ON A WEEKLY BASIS, REPAIR ANY DAMAGED AREAS IMMEDIATELY. REMOVE ALL CAPTURED SEDIMENT AS REQUIRED AND DISPOSE OF. INSTALL ADDITIONAL MEASURES AS DIRECTED BY THE OWNER, LOCAL DPW, CONSERVATION OFFICER AND THE ARCHITECT/ENGINEER.
16. CONTRACTOR SHALL REDUCE SURFACE AND AIR MOVEMENT OF DUST FROM EXPOSED SOIL SURFACES AS REQUIRED BY CONSTRUCTION ACTIVITIES. CONSTRUCTION ACTIVITIES SHALL BE SO SCHEDULED SO THAT THE LEAST AREA OF DISTURBED SOIL IS EXPOSED AT ONE TIME. IN DISTURBED AREAS NOT SUBJECT TO TRAFFIC, CONTRACTOR SHALL USE TEMPORARY SEEDING AND MULCHING OPERATIONS. IN DISTURBED AREAS SUBJECT TO TRAFFIC, CONTRACTOR SHALL SPRINKLE SURFACE WITH WATER TO MINIMIZE DUST. DUST CONTROL MEASURES SHALL BE MAINTAINED THROUGH DRY WEATHER PERIODS UNTIL ALL DISTURBED AREAS HAVE BEEN PERMANENTLY STABILIZED.
17. REMOVE CONSTRUCTION FENCE, SILT BARRIER AND EROSION CONTROL MEASURES ONLY AFTER ESTABLISHMENT OF PERMANENT VEGETATION.

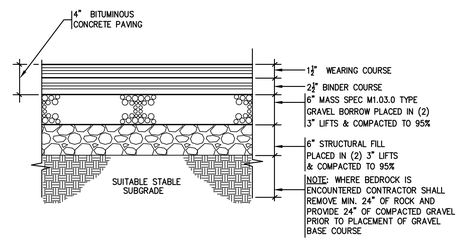

4 / C0.1 STANDARD PAVING SECTION
N.T.S.

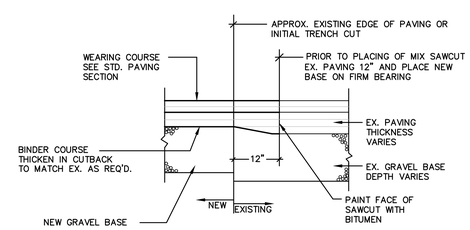

5 / C0.1 DETAIL OF PAVING ADDITION AT EXISTING AREAS
N.T.S.

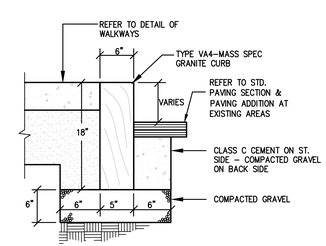

6 / C0.1 DETAIL OF VERTICAL GRANITE CURB
N.T.S.

STORMWATER SYSTEM MAINTENANCE NOTES

THE DRAINAGE SYSTEMS ARE TO BE MONITORED THROUGHOUT THE ENTIRE CONSTRUCTION PERIOD BY THE CONTRACTOR. UPON COMPLETION OF THE PROJECT THE CONTRACTOR SHALL DO A FULL MAINTENANCE OF THE STORMWATER SYSTEM AND SITE. UPON COMPLETION OF THE CONTRACTORS FINAL MAINTENANCE CLEAN UP THE PROJECT MONITORING SHALL BE THE RESPONSIBILITY OF THE CONCORD FREE PUBLIC LIBRARY, HEREAFTER REFERRED TO AS THE OWNER. DURING CONSTRUCTION THE CONTRACTOR SHALL BE REQUIRED TO KEEP AND SUBMIT A WEEKLY LOG OF ALL INSPECTIONS AND REQUIRED MAINTENANCE. THIS LOG SHALL BE MADE AVAILABLE TO THE DPW, BOH, ARCHITECT & ENGINEER AT ALL TIMES.

UPON SUBSTANTIAL COMPLETION OF THE PROJECT. THE OWNER SHALL DESIGNATE A QUALIFIED PROFESSIONAL ENTITY OR INDIVIDUAL TO PERFORM ALL MONITORING. THE NAME, ADDRESS AND TELEPHONE NUMBER OF THE ENTITY OR INDIVIDUAL SHALL BE PROVIDED TO THE LOCAL CONSERVATION COMMISSION, DPW & BOH. THE OWNER'S REPRESENTATIVE SHALL BE REQUIRED TO KEEP A LOG OF ALL REQUIRED INSPECTIONS AND MAINTENANCE REQUIRED. THE LOG SHALL BE MADE AVAILABLE TO THE CONSERVATION COMMISSION, DPW & BOH.

THE DRAINAGE SYSTEMS INCLUDE DEEP-SUMP CATCH BASINS, WATER QUALITY STRUCTURES, LEACHING PITS AND SUBSURFACE INFILTRATION BEDS. THESE FACILITIES PROVIDE PARTIAL TREATMENT OF STORMWATER RUNOFF PRIOR TO DISCHARGE AND/OR INFILTRATION TO GROUNDWATER.

PRIOR TO THE COMMENCEMENT OF EARTHWORK ACTIVITIES, FURNISH ALL LABOR, EQUIPMENT AND TOOLS REQUIRED TO INSPECT AND CLEAN ALL EXISTING CATCH BASINS, DRAIN INLETS, DRAIN MANHOLES, OUTLETS AND INTERCONNECTING PIPE WITHIN THE LIMITS OF THE PROPERTY. FURNISH A REPORT OUTLINING INSPECTION AND CLEANING RESULTS TO THE THE ARCHITECT.

CONSTRUCTION MONITORING/MAINTENANCE PROCEDURES SHALL BE AS FOLLOWS: (RESPONSIBILITY OF CONTRACTOR)

1. SILT BARRIER:
   MONITOR SILT BARRIER ON A WEEKLY BASIS AND AFTER EVERY RAIN STORM. REPAIR ANY DAMAGED AREAS IMMEDIATELY. REMOVE AND DISPOSE OF ALL CAPTURED SEDIMENT.
2. PAVED AREAS:
   PARKING LOT, ROAD AND ALL ACCESS WAYS AND GUTTERS SHALL BE SWEPT CLEAN OF ALL DEBRIS. SWEEPING SHALL BE PERFORMED ON A WEEKLY BASIS.
3. DRAIN INLET:
   ALL DRAIN INLETS SHALL BE INSTALLED AS DETAILED AND INSPECTED AFTER EVERY RAIN STORM. SHOULD CATCH BASIN SUMPS BECOME FILLED WITH SEDIMENT TO HALF ITS DEPTH (2') OR (1') FOR DRAIN MANHOLES THEY SHALL BE CLEANED IMMEDIATELY.
4. WATER QUALITY CATCH BASINS:
   ALL CATCH BASINS AND DRAIN MANHOLES SHALL BE INSTALLED AS DETAILED AND INSPECTED AFTER EVERY RAIN STORM. WHEN THE STRUCTURE BECOME FILLED WITH SEDIMENT TO A DEPTH
5. SUBSURFACE INFILTRATION CHAMBERS:
   SUBSURFACE INFILTRATION CHAMBERS SHALL BE INSPECTED AFTER EVERY RAIN STORM. CARE SHALL BE TAKEN TO PREVENT SILTATION OF THE BEDS AFTER INSTALLATION. PRETREATMENT BMP'S (CATCH BASINS AND WATER QUALITY STRUCTURES) MUST BE MAINTAINED AND CLEANED PER THE AFOREMENTIONED PROCEDURES TO ENSURE PROPER FUNCTIONING. BEDS SHALL BE MONITORED FOR ANY PONDING AND SEDIMENT/DEBRIS. SEDIMENT AND DEBRIS SHALL BE REMOVED BY A VAC-TRUCK.
6. SWALES:
   SWALES SHALL BE INSPECTED AFTER EVERY RAIN STORM. SWALE SHALL BE MONITORED FOR ANY SLOPE EROSION, PONDING AND SEDIMENTATION. ACCUMULATED SEDIMENT AND DEBRIS SHALL BE REMOVED, BY HAND AND DISPOSED OF. MAINTAIN ALL EROSION CONTROL MEASURES DURING THE COURSE OF CONSTRUCTION AND IN ACCORDANCE WITH THE SWPPP.

DISPOSAL OF THE ACCUMULATED SEDIMENT MUST BE IN ACCORDANCE WITH ALL APPLICABLE LOCAL, STATE, AND FEDERAL GUIDELINES AND REGULATIONS.

POST CONSTRUCTION MONITORING/MAINTENANCE PROCEDURES SHALL BE AS FOLLOWS: (RESPONSIBILTY OF THE OWNER)

1. PAVED AREAS:
   PARKING LOT, ROAD AND ALL ACCESS WAYS AND GUTTERS SHALL BE SWEPT CLEAN OF ALL DEBRIS. SWEEPING SHALL BE PERFORMED ONCE A MONTH USING A MECHANICAL SWEEPER OR EVERY THREE MONTHS USING A HIGH EFFICIENCY VACUUM SWEEPER OR REGENERATIVE AIR SWEEPER SCHEDULED IN SPRING, SUMMER, FALL AND WINTER.
2. WATER QUALITY CATCH BASINS:
   ALL WATER QUALITY CATCH BASINS SHALL BE INSPECTED TO ENSURE FRAMES AND GRATES ARE NOT DAMAGED, AND UNIT IS DRAINING FREELY ON A MONTHLY BASIS. INSPECT UNIT IMMEDIATELY AFTER ANY FUEL, OIL OR CHEMICAL SPILL. CLEAN STRUCTURES SEMIANNUALLY AT THE END OF FOLIAGE AND SNOW REMOVAL SEASONS OR ONCE SEDIMENT DEPTH REACHES 15%, OR APPROXIMATELY 8", OF STORAGE CAPACITY.
3. DRAIN INLET:
   ALL DRAIN INLETS SHALL BE INSPECTED TO ENSURE THEY HAVE ADEQUATE SUMP CAPACITY, OIL/GREASE HOODS ARE IN PLACE, FRAMES AND GRATES ARE NOT DAMAGED. DRAIN INLETS SHALL BE INSPECTED EVERY THREE MONTHS SCHEDULED IN SPRING, SUMMER, FALL AND WINTER AND AT THE END OF THE FOLIAGE AND SNOW REMOVAL SEASONS. DRAIN INLET SUMPS SHALL BE CLEANED ANNUALLY OR WHEN THE DRAIN INLET SUMPS BECOME FILLED WITH SEDIMENT TO HALF ITS DEPTH.
4. SUBSURFACE INFILTRATION CHAMBERS:
   SUBSURFACE INFILTRATION CHAMBERS SHALL BE INSPECTED SEMIANNUALLY AT THE END OF FOLIAGE AND SNOW REMOVAL SEASONS, AND AFTER EVERY MAJOR STORM EVENT (1" OR GREATER RAINFALL OVER A 24 HOUR PERIOD). BEDS SHALL BE MONITORED FOR ANY PONDING AND SEDIMENTATION/DEBRIS. SEDIMENT AND DEBRIS SHALL BE REMOVED BY A VAC-TRUCK. AFTER THE MAJOR STORM EVENT THE SYSTEM SHALL BE MONITORED FOR A 72 HOUR PERIOD. IF SYSTEM FAILS TO DRAIN WITHIN A 72 HOUR PERIOD THE OWNER SHALL RETAIN A QUALIFIED PROFESSIONAL ENGINEER TO ASSESS WHETHER THE INFILTRATION BED HAS FAILED AND RECOMMENDED ANY CORRECTIVE ACTION THAT IS REQUIRED.

DISPOSAL OF THE ACCUMULATED SEDIMENT MUST BE IN ACCORDANCE WITH ALL APPLICABLE LOCAL, STATE, AND FEDERAL GUIDELINES AND REGULATIONS. IF ANY STRUCTURE OR OUTFALL INDICATES THE PRESENCE OF PETROLEUM IT SHALL BE REMOVED AND DISPOSED OF IMMEDIATELY IN ACCORDANCE WITH APPLICABLE REGULATIONS.

THE RESULTS OF THE INSPECTIONS, ALONG WITH THE DETERMINATION OF ANY REMEDIAL WORK THAT MAY BE FOUND TO BE NECESSARY AS A RESULT OF THE INSPECTION, SHALL BE SUBMITTED TO THE CONSERVATION COMMISSION WITHIN (30) DAYS OF THE INSPECTION. PROVISIONS FOR INSPECTIONS AND ANY REMEDIAL REPAIRS DEEMED NECESSARY SHALL BE THE RESPONSIBILITY OF THE OWNER.

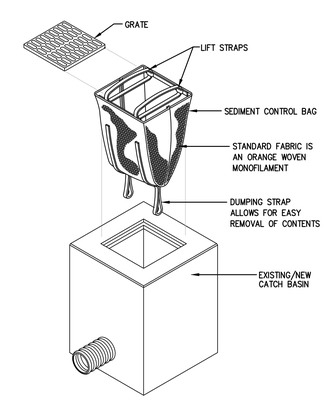

7 / C0.1 SEDIMENT CONTROL BAG
N.T.S.

JOHNSON ROBERTS ASSOCIATES INC.
ARCHITECTS
15 PROPERZI WAY
SOMERVILLE, MA
01243 - 3228

GARCIA-GALUSKA-DESOUSA CONSULTING ENGINEERS INC.
370 FAUNCE CORNER ROAD, DARTMOUTH, MA 02747-1217
508-998-5700 • FAX 508-998-0883 • E-MAIL info@g-g-d.com

Revisions:

CONCORD FREE PUBLIC LIBRARY EXPANSION
CONCORD, MA

Sheet Title:
Site Legend, Notes & Details

Date: 8-June-2020 Drawn By: NCK
Scale: AS NOTED Project No.: 1714

C0.1

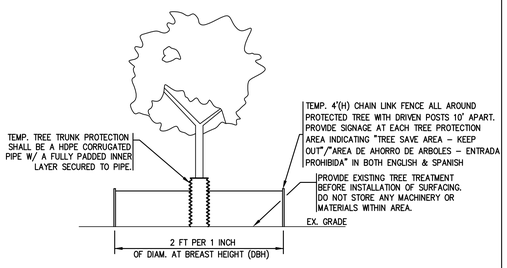

1 C0.2 TREE PROTECTION DETAIL
N.T.S.

TREE PROTECTION SHALL BE INSTALLED AT ALL EXISTING TREES TO REMAIN AND 6" DIAMETER AND LARGER. REFER TO THE TOWN OF CONCORD TREE PRESERVATION BYLAW

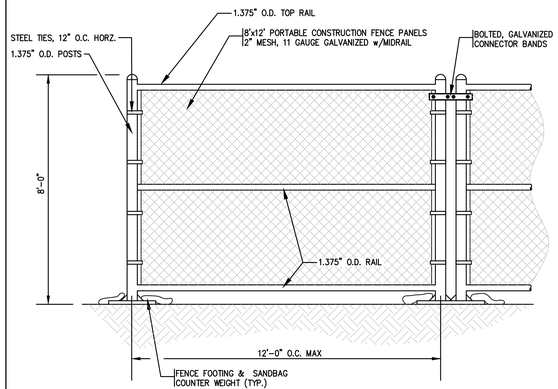

2 C0.2 TEMPORARY CONSTRUCTION FENCE DETAIL
N.T.S.

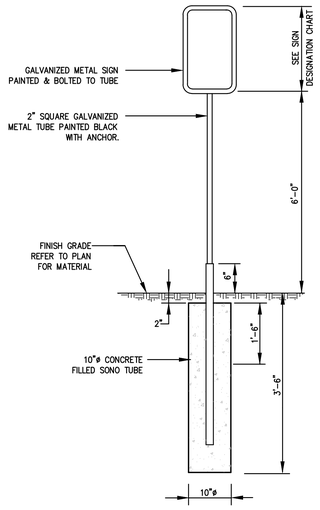

SIGN DESIGNATION CHART			
SIGN DESIGNATION	HEIGHT	WIDTH	SIGN
R7-8 "ACCESSIBLE PARKING"	18"	12"	RESERVED PARKING
R7-8b "VAN ACCESSIBLE"	6"	12"	VAN ACCESSIBLE
CS-1 CUSTOM SIGN: "LIBRARY VEHICLE ONLY"	18"	12"	RESERVED PARKING LIBRARY VEHICLE ONLY

5 C0.2 SIGNAGE DETAIL
N.T.S.

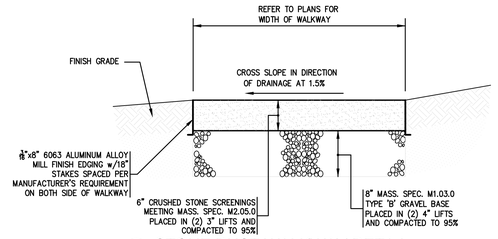

6 C0.2 STONE DUST WALKWAY DETAIL
N.T.S.

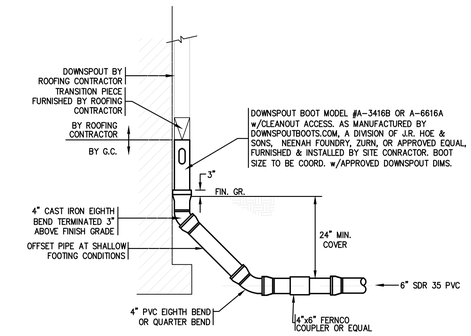

10 C0.2 DOWNSPOUT CONNECTION AT GRADE DETAIL
N.T.S.
NOTE:
REFER TO TRENCH SECTION DETAIL FOR PIPE BEDDING REQUIREMENTS

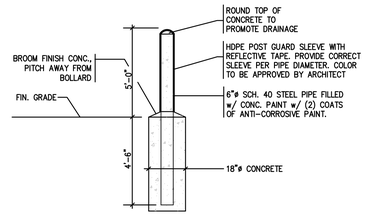

7 C0.2 PROTECTIVE BOLLARD DETAIL
N.T.S.
NOTE:
1. BOLLARD, GALVANIZED & PRIME COATED BY SECTION 055000.
2. HDPE POST GUARDS TO BE FITTED TO THE DIAMETER OF THE POSTS. TWO REFLECTIVE SAFETY STRIPES ON EACH BOLLARD.
3. HDPE POST GUARDS SHALL BE STANDARD BUMPER POST BY STOR-QUIP SYSTEMS, INC., BOLLARDGARD BY INNOPLAST, POST GUARD BY ENCORE COMMERCIAL PRODUCTS, INC. OR APPROVED EQUAL.

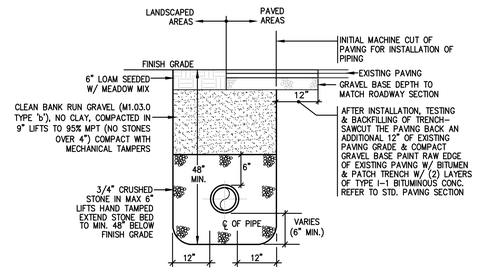

11 C0.2 TYPICAL TRENCH SECTION FOR DRAINAGE & SEWER
N.T.S.

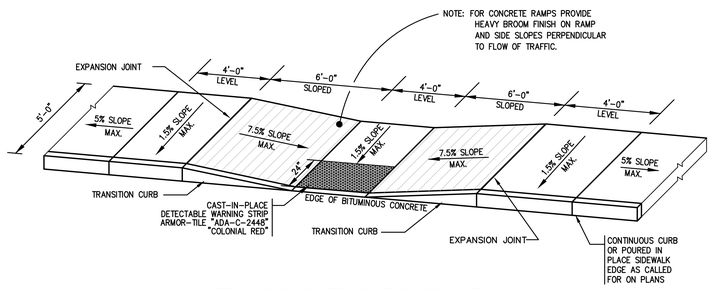

3 C0.2 DETAIL OF ACCESSIBLE CURB CUT
N.T.S.

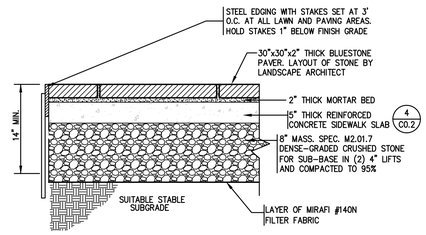

8 C0.2 BLUESTONE PLAZA SECTION
N.T.S.
NOTE: DURING INSTALLATION, THE CONTRACTOR SHALL MONITORING THAT ALL STONES PLACED IN CONCRETE BED MEET THE REQUIREMENTS OF MAAB AND ADA.

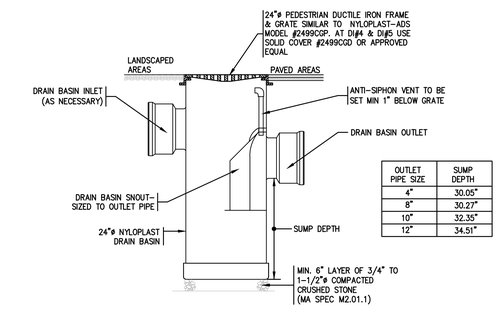

OUTLET PIPE SIZE	SUMP DEPTH
4"	30.05"
8"	30.27"
10"	32.35"
12"	34.51"

12 C0.2 PLASTIC DRAIN INLET DETAIL
N.T.S.
NOTE:
1. ALTERNATE MANUFACTURERS SHALL INCLUDE HARCO AND ADS PIPE.
2. ALL GRATES SHALL BE PEDESTRIAN GRADE AND MEET THE REQUIREMENTS OF MAAB/ADA.
3. FURNISH & INSTALL SEDIMENT CONTROL BAGS IN ALL DRAIN INLET STRUCTURES. INSPECT & MAINTAIN ALL STRUCTURES ON A WEEKLY BASIS UNTIL SITE IS ENTIRELY STABILIZED.

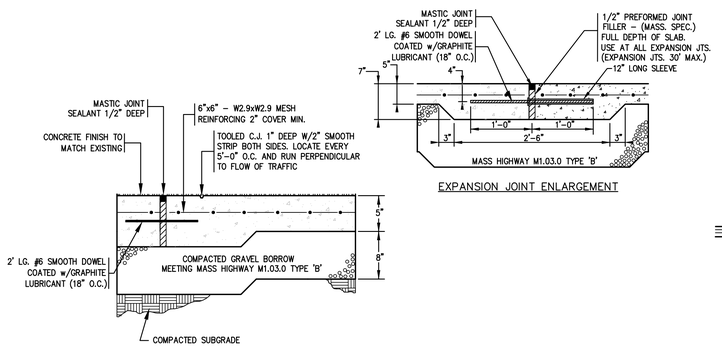

4 C0.2 CONCRETE SIDEWALK DETAIL
NTS
NOTE:
CONTRACTOR TO INSTALL MASTIC JOINT SEALANT AND PREFORMED JOINT FILLER AT ALL LOCATIONS WHERE SIDEWALK ABUTS THE BUILDING.

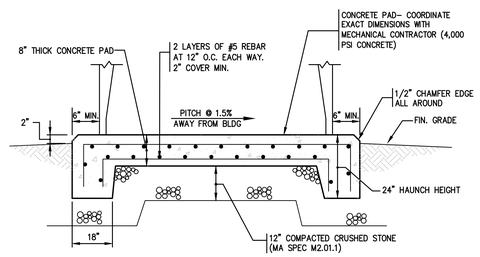

9 C0.2 CONCRETE EQUIPMENT PAD DETAIL
N.T.S.
PAD DIMENSIONS:
PAD #1: 3.5' x 12.5' – MECHANICAL EQUIPMENT PAD
FINAL PAD DIMENSIONS TO BE COORDINATED WITH APPROVED EQUIPMENT SHOP DRAWINGS.

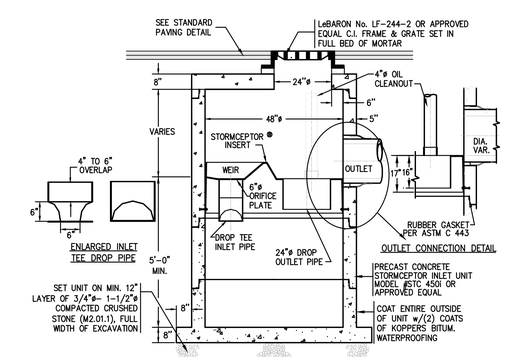

13 C0.2 STORMCEPTOR CATCH BASIN DETAIL
N.T.S.
NOTE:
1. ALTERNATE MANUFACTURERS SHALL INCLUDE CONTECH CDS, HYDROWORKS HYDROGUARD AND HYDRO INTERNATIONAL DOWNSTREAM DEFENDER.

JOHNSON ROBERTS ASSOCIATES INC.
ARCHITECTS
15 PROPERZI WAY
SOMERVILLE, MA
01243 - 3228

GARCIA-GALUSKA-DESOUSA
CONSULTING ENGINEERS INC.
370 FAUNCE CORNER ROAD, DARTMOUTH, MA 02747-1217
508-998-5700 • FAX 508-998-0883 • E-MAIL info@g-g-d.com

Revisions:

CONCORD FREE PUBLIC LIBRARY EXPANSION
CONCORD, MA

Sheet Title:
Site Details

Date: 8-June-2020 Drawn By: NCK
Scale: AS NOTED Project No.: 1714

C0.2

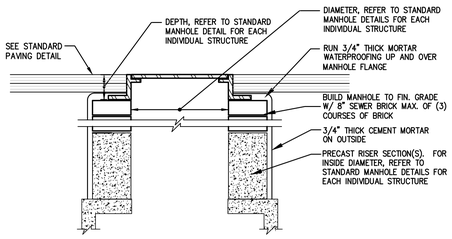

1 / C0.3 MANHOLE RISER DETAIL
N.T.S.

4 / C0.3 BLANK
N.T.S.

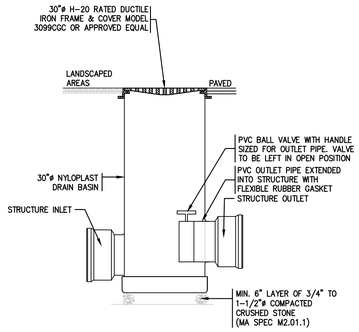

2 / C0.3 OUTLET CONTROL STRUCTURE WITH ISOLATION VALVE DETAIL
N.T.S.

5 / C0.3 BLANK
N.T.S.

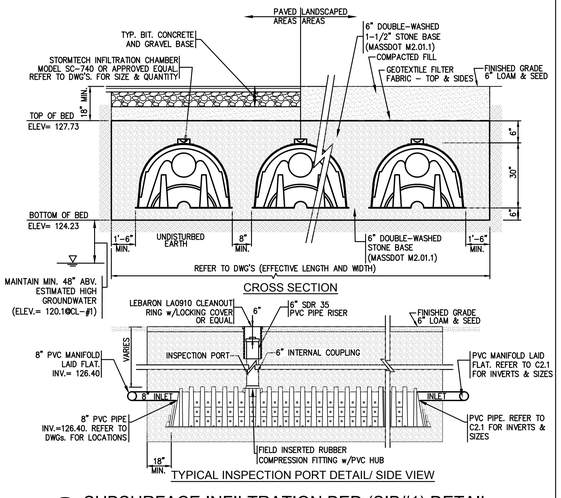

3 / C0.3 SUBSURFACE INFILTRATION BED (SIB#1) DETAIL
N.T.S.

NOTES:
1. REFER TO PLAN 1/C2.1 FOR LOCATIONS OF INSPECTION PORTS. CONTRACTOR TO FURNISH ALL MATERIAL AND LABOR TO CONNECT 6" PVC INSPECTION RISERS TO CHAMBERS
2. REFER TO PLAN 1/C2.1 FOR CHAMBER CONFIGURATIONS AND VOLUME REQUIREMENTS.

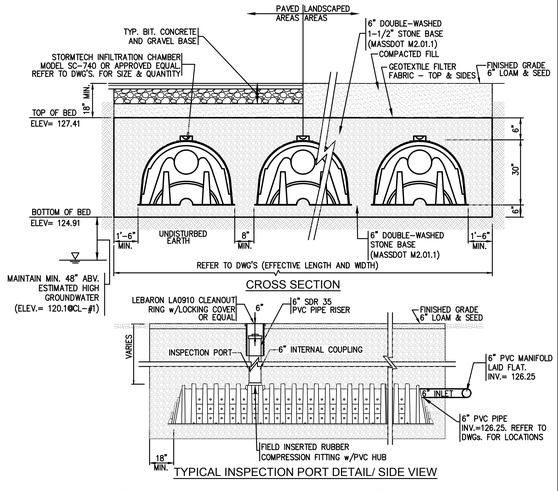

6 / C0.3 SUBSURFACE INFILTRATION BED (SIB#2) DETAIL
N.T.S.

NOTES:
1. REFER TO PLAN 1/C2.1 FOR LOCATIONS OF INSPECTION PORTS. CONTRACTOR TO FURNISH ALL MATERIAL AND LABOR TO CONNECT 6" PVC INSPECTION RISERS TO CHAMBERS
2. REFER TO PLAN 1/C2.1 FOR CHAMBER CONFIGURATIONS AND VOLUME REQUIREMENTS.

JOHNSON ROBERTS ASSOCIATES INC.
ARCHITECTS
15 PROPERZI WAY
SOMERVILLE, MA
01243 - 3228

GARCIA-GALUSKA-DESOUSA
CONSULTING ENGINEERS INC.
370 FAUNCE CORNER ROAD, DARTMOUTH, MA 02747-1217
508-998-5700 • FAX 508-998-0883 • E-MAIL info@g-g-d.com

Revisions:

CONCORD FREE PUBLIC LIBRARY EXPANSION

CONCORD, MA

Sheet Title:

Site Details

Date: 8-June-2020 Drawn By: NCK

Scale: AS NOTED Project No.: 1714

C0.3

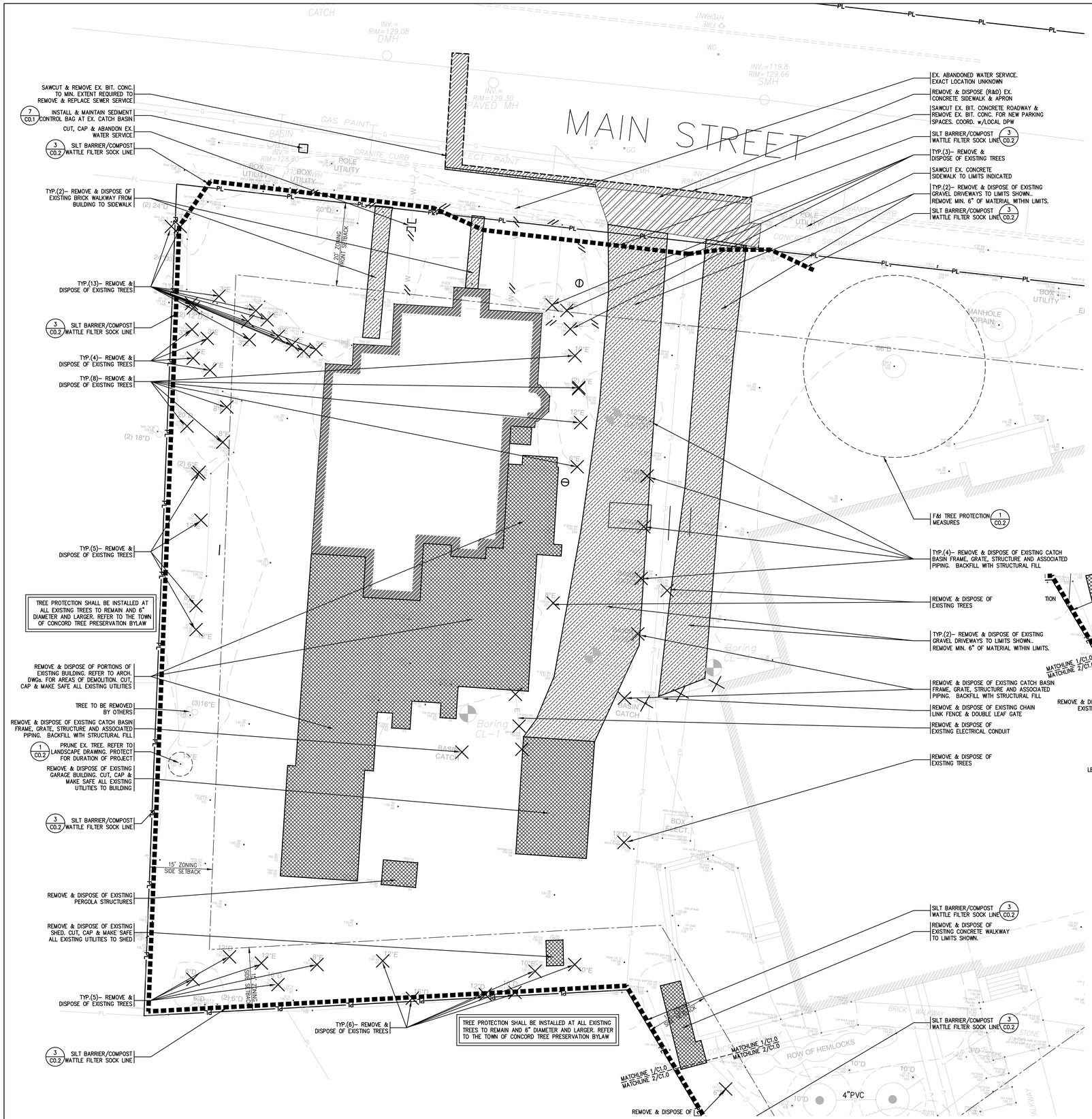

1 C1.0 SITE DEMOLITION & PREPARATION PLAN
SCALE: 1" = 20'

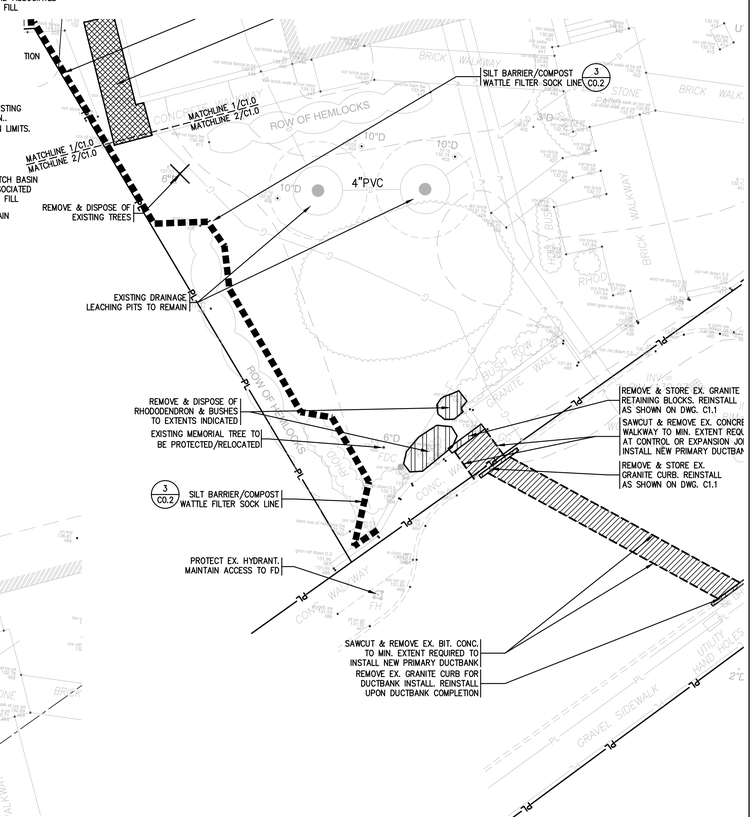

2 C1.0 PARTIAL SITE DEMOLITION & PREPARATION PLAN
SCALE: 1" = 10'

GRAPHIC SCALE

10 0 5 10 20 40

(IN FEET)
1 inch = 10 ft.

JOHNSON ROBERTS ASSOCIATES INC.
ARCHITECTS
15 PROPERZI WAY
SOMERVILLE, MA
01243 - 3228

GARCIA-GALUSKA-DESOUSA
CONSULTING ENGINEERS INC.
370 FAUNCE CORNER ROAD, DARTMOUTH, MA 02747-1317
508-998-5700 • FAX 508-998-0883 • E-MAIL info@g-g-d.com

Revisions:

CONCORD FREE PUBLIC LIBRARY EXPANSION

CONCORD, MA

Sheet Title:

Site Demolition & Preparation Plan

Date: 8-June-2020 Drawn By: NCK

Scale: AS NOTED Project No.: 1714

C1.0

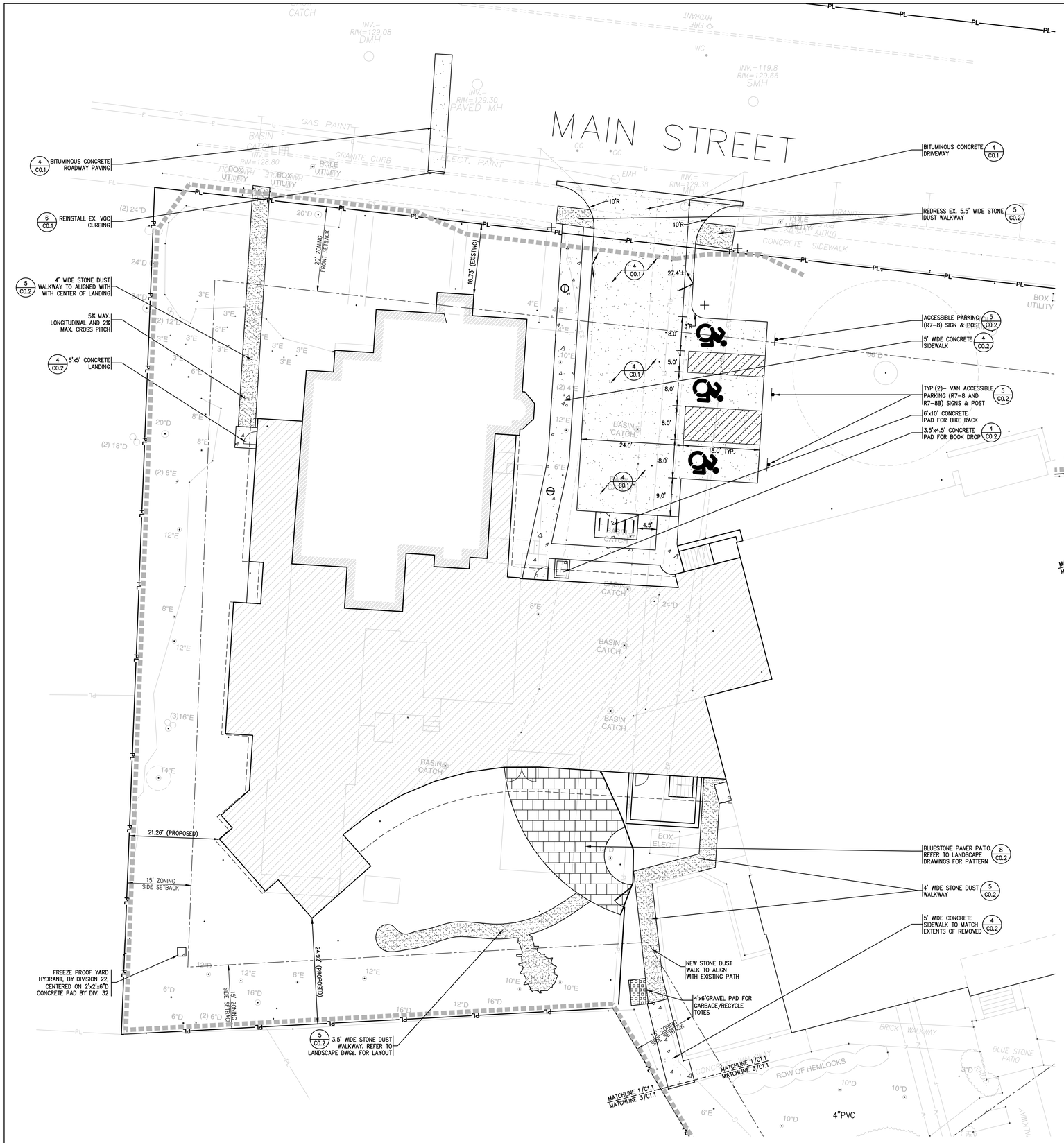

1 C1.1 SITE LAYOUT PLAN
SCALE: 1" = 10'

ZONING DIMENSION TABLE – RESIDENCE–B

USE: PUBLIC LIBRARY
MAP: 9G BLOCKS: 796 & 797

	REQUIRED OR MINIMUM	EXISTING	PROPOSED
(A) MINIMUM LOT SIZE (SF)	20,000 SF	76,693 SF	76,693 SF
(B) MINIMUM LOT FRONTAGE (FT)	125 FEET	480 FT	480 FT
(C) FRONTAGE EXCEPTION (FT)	100 FEET	N/A	N/A
(D) MINIMUM LOT WIDTH (FT)	125 FEET	480 FT	480 FT
(E) MINIMUM FRONT YARD SETBACK (FT)	20 FEET	16.73 FT	16.73 FT (EXISTING)
(F) MINIMUM SIDE YARD SETBACK (FT)	15 FEET	31.29 FT	16.64 FT
(G) MINIMUM REAR YARD SETBACK (FT)	30 FEET	N/A	N/A
(H) CORNER CLEARANCE (FT)	10 FEET	200± FT	200± FT
(I) MAXIMUM HEIGHT (FT)	35 FEET	46± FT	46± FT (EXISTING)
(J) MAXIMUM LOT COVERAGE (%)	NOT APPLICABLE	N/A	N/A
(K) MAXIMUM FLOOR AREA RATIO	NOT APPLICABLE	N/A	N/A

NORTH

EXISTING & PROPOSED LOT COVERAGE

	EXISTING		PROPOSED – DESIGN	
	AREA	% LOT COVERAGE	AREA	% LOT COVERAGE
BUILDING (FOOTPRINT)	21,886 SF	29.30%	25,874 SF	33.74%
DRIVES, WALKS (IMPERVIOUS)	6,640 SF	8.89%	10,927 SF	14.25%
TOTAL	28,526 SF	38.19%	36,801 SF	47.99%

2 C1.1 SITE ZONING TABLE
SCALE: N.T.S.

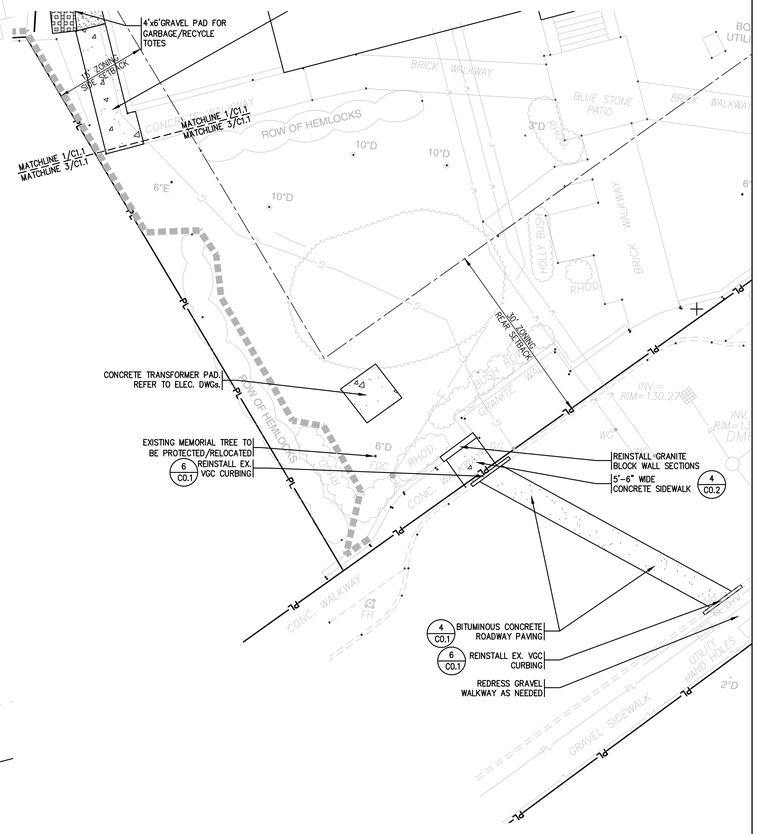

3 C1.1 PARTIAL SITE LAYOUT PLAN
SCALE: 1" = 10'

GRAPHIC SCALE
10 0 5 10 20 40
(IN FEET)
1 inch = 10 ft.

JOHNSON ROBERTS ASSOCIATES INC.
ARCHITECTS

15 PROPERZI WAY
SOMERVILLE, MA
01243 - 3228

GARCIA-GALUSKA-DESOUSA
CONSULTING ENGINEERS INC.
370 FAUNCE CORNER ROAD, DARTMOUTH, MA 02747-1217
508-998-5700 • FAX 508-998-0883 • E-MAIL info@g-g-d.com

Revisions:

CONCORD FREE PUBLIC LIBRARY EXPANSION
CONCORD, MA

Sheet Title:
Site Layout Plan

Date: 8-June-2020 Drawn By: NCK
Scale: AS NOTED Project No.: 1714

C1.1

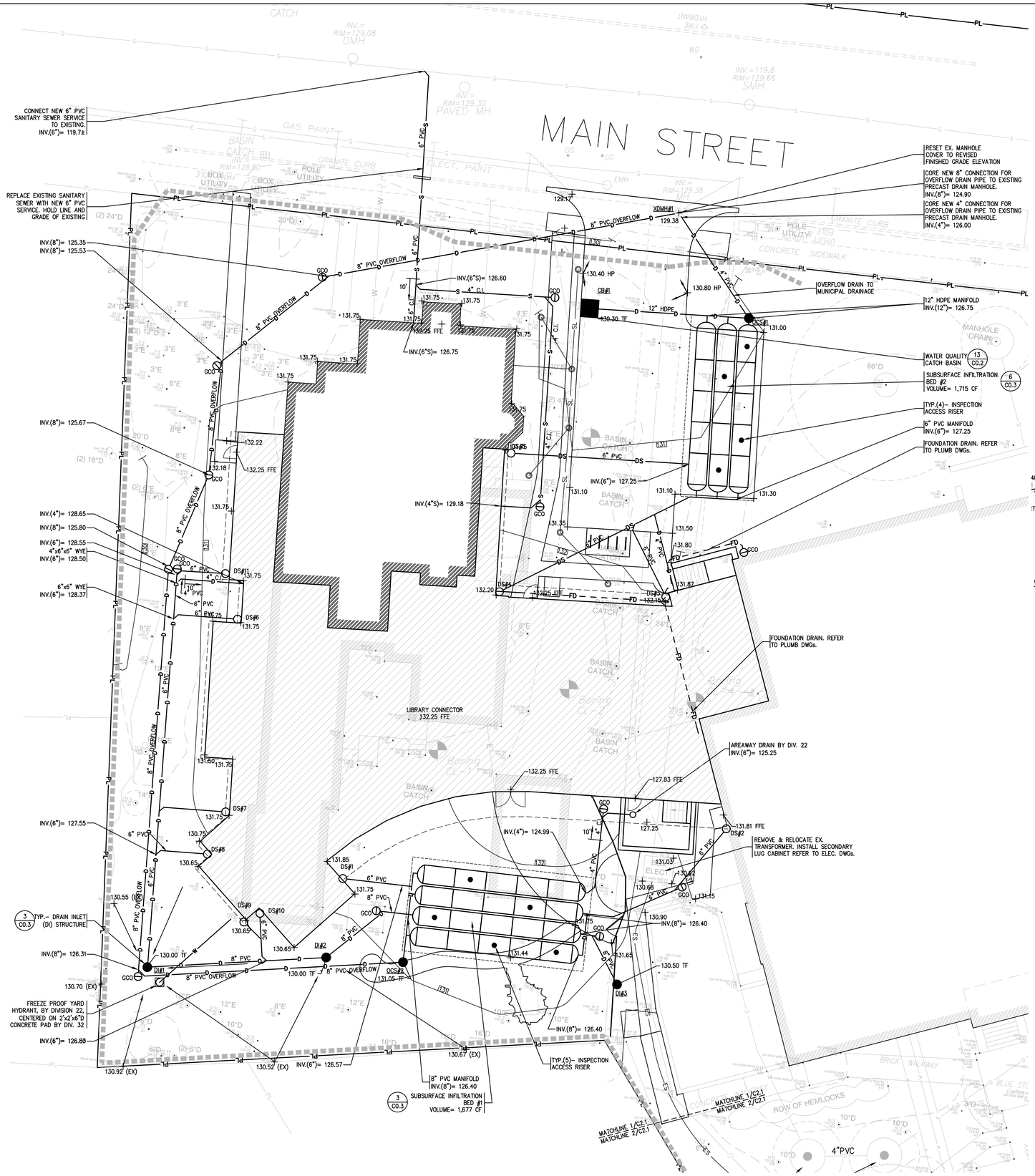

1 C2.1 SITE UTILITY & GRADING PLAN
SCALE: 1" = 10'

DOWNSPOUTS				
STRUCTURE #	FINISH GRADE	INV. OUT ELEV.	DOWNSPOUT DETAIL	REMARK
DS #1	131.75	127.20	10/C0.2	N/A
DS #2	131.81	127.00	10/C0.2	N/A
DS #3	132.25	128.75	10/C0.2	N/A
DS #4	132.20	129.50	10/C0.2	N/A
DS #5	131.75	128.85	10/C0.2	N/A
DS #6	131.75	128.79	10/C0.2	N/A
DS #7	131.75	128.00	10/C0.2	N/A
DS #8	130.70	127.80	10/C0.2	N/A
DS #9	130.65	127.20	10/C0.2	N/A
DS #10	130.65	127.20	10/C0.2	N/A
DS #11	131.75	129.00	10/C0.2	N/A

CATCH BASINS/DRAIN INLETS					
STRUCTURE #	RIM ELEV.	INV. IN ELEV.	INV. IN ELEV.	INV. OUT ELEV.	DETAIL
CB(WQ) #1	130.30	——	——	127.00 (LP#1)	13/C0.2
DI #1	130.00	127.20	——	127.10 (DI#2)	12/C0.2
DI #2	130.00	126.70	——	126.60 (SIB#1)	12/C0.2
DI #3	130.50	——	——	127.00 (SIB#1)	12/C0.2

OUTLET CONTROL STRUCTURES						
STRUCTURE #	RIM ELEV.	INV. IN ELEV.	INV. IN ELEV.	INV. IN ELEV.	INV. OUT ELEV.	DETAIL
OCS #1	131.50	126.40 (SIB#2)	——	——	126.40 (XDMH#1)	2/C0.3
OCS #2	131.05	126.75 (SIB#1)	——	——	127.42 (XDMH#1)	2/C0.3

3 C2.1 DRAINAGE STRUCTURE ELEVATION SCHEDULE
SCALE: N.T.S.

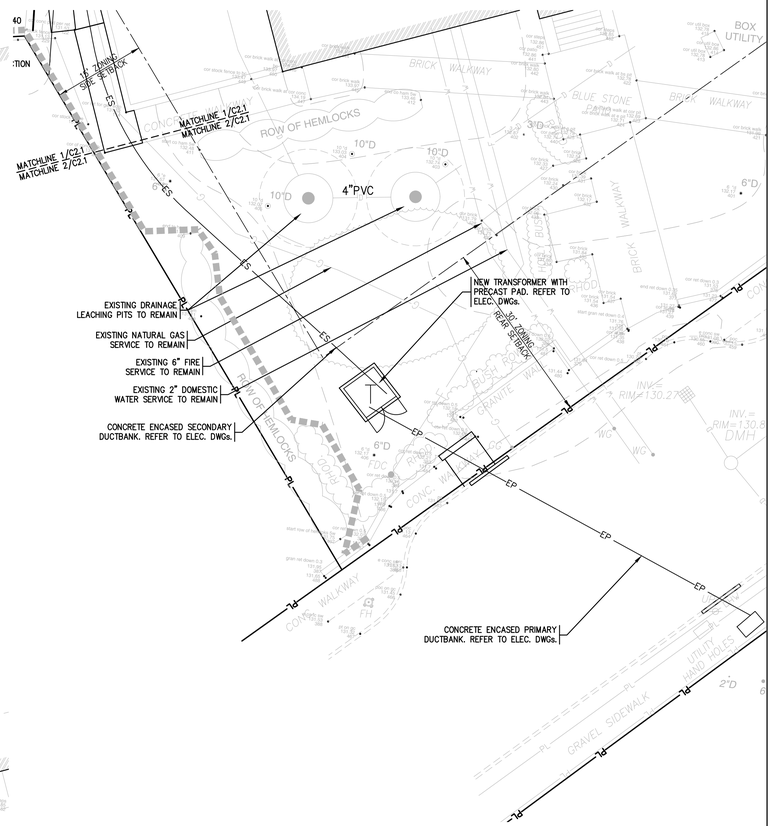

2 C2.1 PARTIAL SITE UTILITY & GRADING PLAN
SCALE: 1" = 10'
NOTE:
FURTHER SURVEY INFORMATION IS REQUIRED IN THIS AREA TO COMPLETE THE DESIGN.

GRAPHIC SCALE
10 0 5 10 20 40
(IN FEET)
1 inch = 10 ft.

JOHNSON ROBERTS ASSOCIATES INC.
ARCHITECTS
15 PROPERZI WAY
SOMERVILLE, MA
01243 - 3228

GARCIA-GALUSKA-DESOUSA
CONSULTING ENGINEERS INC.
370 FAUNCE CORNER ROAD, DARTMOUTH, MA 02747-1217
508-998-5700 • FAX 508-998-0883 • E-MAIL info@g-g-d.com

Revisions:

CONCORD FREE PUBLIC LIBRARY EXPANSION

CONCORD, MA

Sheet Title:
Site Utility & Grading Plan

Date: 8-June-2020 Drawn By: NCK
Scale: AS NOTED Project No.: 1714

C2.1

PLANT LIST for the Concord Free Public Library Expansion, Concord, MA

Plants must be approved by landscape architect.(LA) Substitutions by LA only shall be made as needed, based on availability and condition of plant material.
The contractor is required to furnish and install plants as indicated on the Plan, and shall be placed on site under the direction of the Landscape Architect.

Symbol/Botanical Name	Common Name	No.	Size	Remarks
Deciduous Trees				
AL/Amelanchier 'Autumn Brilliance'	Autumn Brilliance Serviceberry	3	7-8'Ht. multi	Full, matching;
OC/Oxydendrum arboreum	Sourwood	1	2-2.5"C	Specimen shape. LA. may sub. Acer palm. 'Bloodgood' if necessary
PR/Prunus subhirtella 'Autumnalis'	Autumn Higan Cherry	3	3-3.5"C	Matching
ST/Stewartia pseudocamilla	Japanese Stewartia	1	4-4.5"	Specimen quality
Evergreen Trees				
AC/Abies concolor	White Fir	2	8-10'Ht	
CO/Chamaecyparis obtusa	Hinoki Falsecypress	1	10-12'Ht	Mature height @ 40-50' x 20'width (estimated)
TH/Thuja plicata 'Virescens'	Virescens Western Arborvitae	16	10-12'Ht	Mature height @ 20-30' x 8-10 ' width (estimated)
Shrubs				
BU/Buxus microphylla 'Green Velvet'	Green Velvet Boxwood	15	2.5-3'Ht	Matching; LA may sub. another variety
CE/Cephalotaxus harringtonia 'Fastigiata'	Fastigiate Jap. Plum Yew	7	4-5'Ht	Mature height @ 8-10' x 6-8 ' width (estimated)
CS/Cornus serica 'Ivory Halo'	Ivory Halo Redowig Dogwood	14	3-4'Ht	Full
HA/Hamamallis sp.	Witchhazel	3	4-5'Ht	LA may sub. Lynnwood Gold Forsythia if necessary
HY/Hydrangea quercifolia 'Munchkin'	Munchkin Oakleaf Hydrangea	17	18-24"Ht	
HQ/Hydrangea quercifolia 'Ruby Slippers'	Ruby Slippers Oakleaf Hydrangea	5	2.5-3'Ht	LA may sub. 'Sikes Dwarf' or 'Snow Queen'
IG/Ilex glabra 'Shamrock'	Shamrock Inkberry	12	3-3.5'Ht	Evergreen; black berries; LA may sub. 'Compacta'
RC/Rhododendron 'Cunningham White'	Cunningham White Rhododendron	7	3-3.5'Ht	Matching; LA may sub. Kalmia lat. (Oly.Wedding) or Brower's B.
RM/Rhododendron maximum	Rosebay Rhododendron	21	4-5'Ht	Full, wide specimens
RMR/Rhododendron maximum 'Roseum'	Pink Rosebay Rhododendron	11	4-5'Ht	Full, wide specimens
RO/Rhododendron 'Olga Mezitt'	Olga Mezitt Rhododendron	6	3-3.5'Ht	
SY/Syringa var.	Lilac/Varieties TBD	11	4-5'Ht	Full/LA to select var. at nursery
VC/Vaccinium coryumboseum	Highbush Blueberry	16	3-4'Ht	Mixed varieties
Groundcover/Herbaceous Plants/Grasses (Final quantity TBD)				
A/Asclepias	Milkweed	5	1 Gal	Pink/purple flowers in summer; Hummingbird attractor
DAY/Hemerocallis Stella d'Oro	Stella d'Oro Daylily	30	2 Gal	May sub. 10 'Stephanie Returns' (Peach)
Ferns: Osmunda cinnamonea	Cinnamon Fern	10	1 Gal	Hummingbird attractor
SS/Polygonatum 'Variegatum'	Variegated Solomon's Seal	40	1 Gal	Final count TBD during planting
PA/Pachysandra terminallis	Pachysandra	50	1Qt	Final count TBD during planting
PE/Pennisetum al. 'Hameln'	Dwarf Fountain Grass	25	2 Gal	Final count TBD during planting
VM/Vinca minor	Vinca	150	1Qt	Final count TBD during planting
Bulbs—Fall planting only				
S/Scilla 'Spring Beauty'	Spring Beauty Scilla	1000	Bulbs	Random spacing/Fall planting only/ Under existing Yellowwood
DAFS/Dafodils 'The Works' by White Flower Farm		100	Bulbs	Random spacing/Fall planting only, perhaps by school children

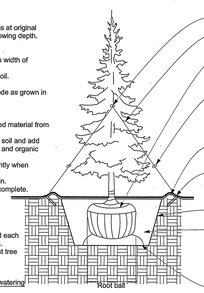

Note: Plant field dug evergreens at original north-south orientation and growing depth.

Tree Pit
Width of pit shall be three times width of rootball.
Place rootball on undisturbed soil.
Slope sides of pit and scarify.
Top of ball shall be at same grade as grown in nursery.

Planting Mix & Watering:
Backfill shall be slightly improved material from tree pit.
Break up clods and compacted soil and add minimal amounts of vermiculite and organic material if soil is poor.
Add soil gradually and tamp lightly when backfilling.
Water halfway and allow to drain.
Water thoroughly after backfill complete.

Mulch:
Place 2in. to 4in. mulch around each tree, 36in. dia. circle, minimum.
Do not place any mulch against tree trunk.

See planting Notes for mulch, watering and other requirements.

- New black 1/2in. reinforced rubber hose guard over staking wire.
- Staking wire or cable pulled carefully between branches.
- Fold back top 1/3 of burlap, and remove plastic or wire from root ball.
- U-Bolt
- 4in. temporary mound of earth around plant pit to retain water.
- Guying stake set flush with finish grade.
- Slop and scarify sides of pit.
- Prepare soil mix.(Use subsoil mixed with amendments if needed.) Compacted by lightly tamping.
- Subgrade: leave undisturbed under root ball.

1 Coniferous Tree Planting Detail
SCALE: NOT TO SCALE

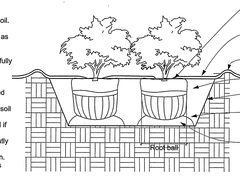

Pit for Balled or Potted Plants
Width of pit shall be three times width of root ball or container.
Place root ball on undisturbed soil.
Slope sides of pit and scarify.
Top of ball shall be same grade as grown in nursery.
Remove container from containerized material and carefully loosen outer edge of root ball.

Planting Mix & Watering:
Backfill shall be slightly improved material from pit.
Break up clods and compacted soil and add minimal amounts of vermiculite and organic material if soil is poor.
Add soil gradually and tamp lightly when backfilling.
Water halfway and allow to drain.
Water thoroughly after backfill is complete.

- Top of ball, same grade as grown in nursery.
- 2-3" Depth bark mulch .
- 3" Earth saver at pit, cut rope from trunk.
- Plant mix.
- Slope + scarify pit sides.
- Spread burlap away from ball, top 1/3 only. Remove all wire and plastic.
- Settling mound, adjust to allow top of ball to be at grade as at nursery.

2 Shrub Planting Detail
SCALE: NOT TO SCALE

Tree Pit
Width of pit shall be three times width of rootball.
Place root ball on undisturbed soil.

Slope sides of pit and scarify.

Top of ball shall be at same grade as growing in nursery.

Planting Mix & Watering:
Backfill shall be slightly improved material from tree pit.
Break up clods and compacted soil and add minimal amounts of vermiculite and organic material if soil is poor.
Add soil gradually and tamp lightly when backfilling.
Water halfway and allow to drain.
Water thoroughly after backfill complete.

Mulch:
Place 2in. to 4in. mulch around each tree, 36in. dia. circle, minimum.
Do not place any mulch against tree trunk.

See Planting Notes for mulch, watering and other requirements.

Staking:
Generally, large trees do not need staking or tree wrap. However, contractors may stake trees to protect from mowers and to provide anchorage, especially if wind is a problem.

If stakes are necessary, use 3 stakes, 6ft. to 8ft. long, driven 2ft. into ground and 1 ft. from trunk of tree. Guy material shall be wide fabric band.
Stakes should be fastened to allow some trunk movement.
Stakes & guy should be removed within 1 year of planting.

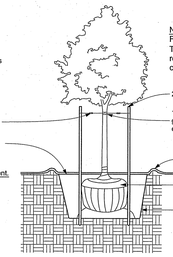

- Galv. turnbuckle, 1 per cable.
- 2x2 hardwd. stakes.
- 1/2" I.D. reinf. hose with 3/16" galv. steel cable. Clamb loose ends. Hose shall be black or dark green.
- 4in. temporary mound of earth around plant pit to retain water.
- Fold back top 1/3 of burlap, and remove plastic or wire from root ball.
- Slope and scarify sides of pit.

NOTE:
F & I 20 GAL Tree Gator Bag at all deciduous trees. Tree Gator Bag 98183, Dark Green, for slow release tree irrigation or as approved equal. Submit catalog cut for approval.

3 Deciduous Tree Planting Detail
SCALE: NOT TO SCALE

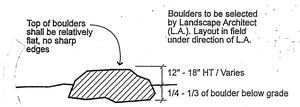

11 Section / Boulders at Reading Circle
NOT TO SCALE

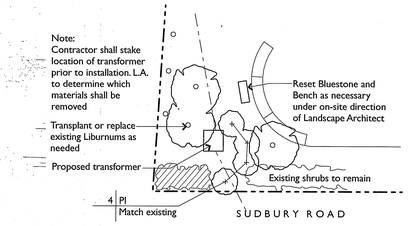

Planting at New Transformer
NOT TO SCALE

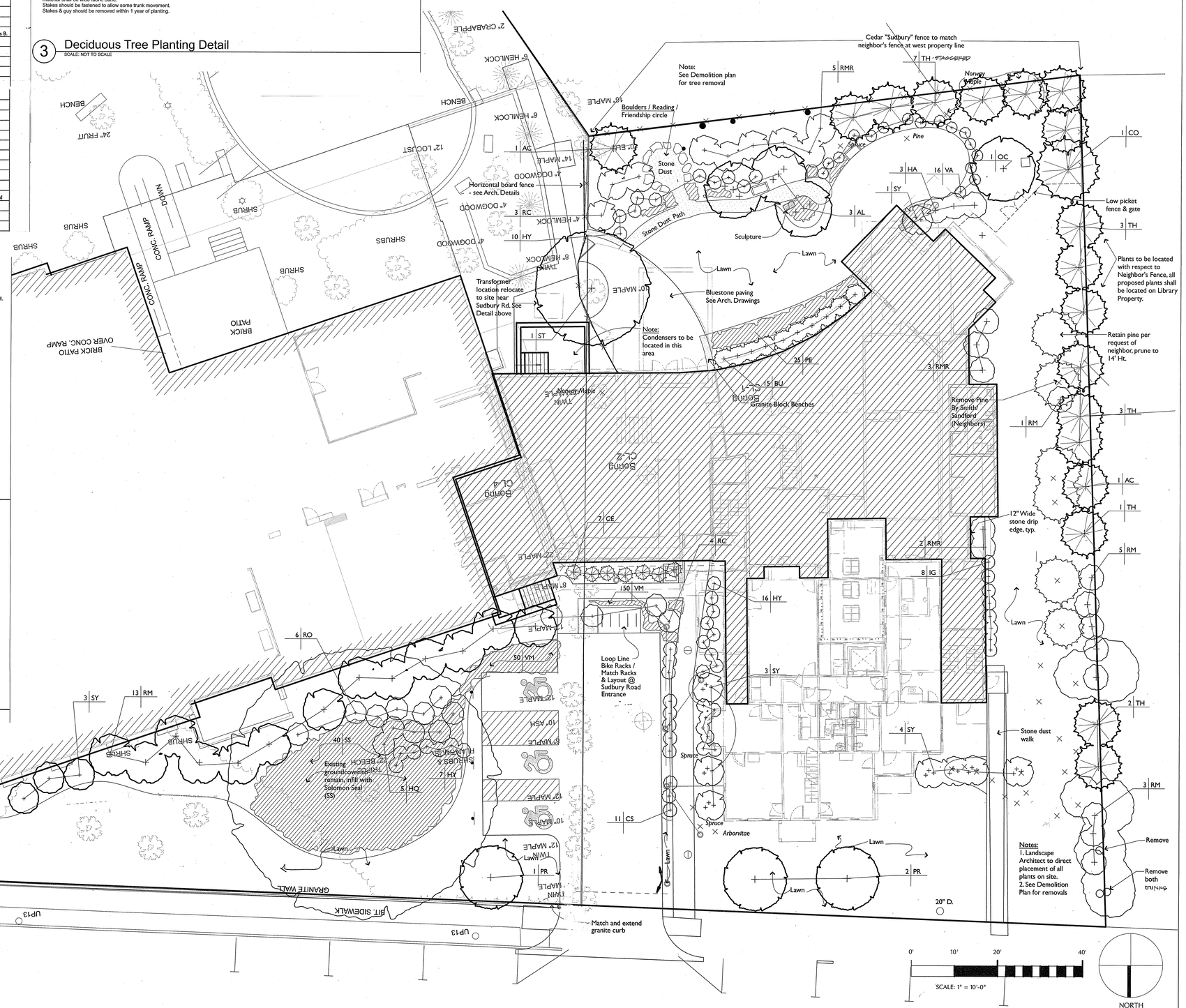

LEGEND

- Existing tree to remain / or as noted
- Existing tree to be removed
- Proposed deciduous tree or shrub
- Proposed evergreen tree or shrub
- Perennials / Groundcover
- Bench

Kim Ahern
Landscape Architects
40 Foster Street
Littleton, Massachusetts 01460
Telephone 978.486.0040
Faxsimile 978.486.0330

JOHNSON ROBERTS ASSOCIATES INC.
ARCHITECTS
15 PROPERZI WAY
SOMERVILLE, MA
01243 - 3228

GARCIA·GALUSKA·DESOUSA
CONSULTING ENGINEERS INC.
375 FAUNCE CORNER ROAD, DARTMOUTH, MA 02747 • 1217
508 •998•0700 • FAX 508 •998•4983 • G-MAIL:info@g-g-d.com

Revisions:

CONCORD FREE PUBLIC LIBRARY EXPANSION

CONCORD, MA

Sheet Title:

LANDSCAPE PLAN

Date: 9-June-2020 Drawn By: KA
Scale: 1" = 10'-0" Project No.: 1714

L1.0

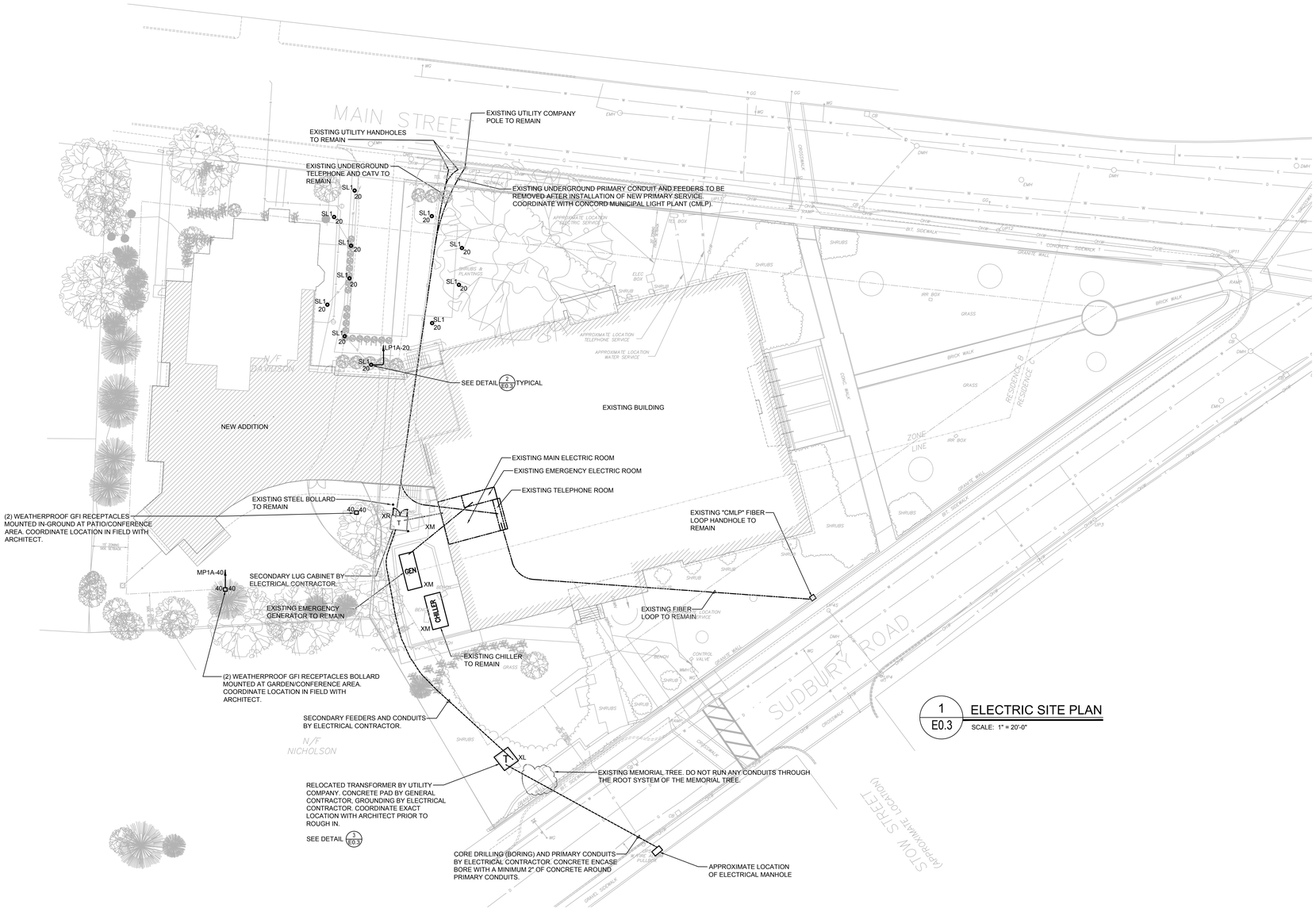

1 / E0.3 ELECTRIC SITE PLAN

SCALE: 1" = 20'-0"

GENERAL NOTES

1. DO NOT RUN ANY UNDERGROUND RACEWAYS WITHIN PLANTING AREAS. REFER TO LANDSCAPE DRAWINGS FOR LOCATIONS. COORDINATE ROUTING WITH ARCHITECT.
2. REFER TO CIVIL DRAWINGS FOR EXACT ROUTING OF UTILITIES. REFER TO LANDSCAPE DRAWINGS FOR EXACT LOCATIONS OF SITE LIGHT FIXTURES.
3. COORDINATE EXACT LOCATION OF SITE LIGHTING FIXTURES WITH ARCHITECT PRIOR TO ROUGHING-IN.
4. ALL SITE WIRING SHALL BE A MINIMUM OF 2#8 & 1#10G-1"C.
5. COORDINATE DUCT BANK & CONDUIT ROUTING W/ARCH
6. COORDINATE PHASING OF NEW SERVICES WITH ARCHITECT. BUILDING WILL BE VACANT FOR A PERIOD OF TIME BUT GENERALLY WILL REMAIN OCCUPIED DURING MOST OF THE CONSTRUCTION PERIOD.

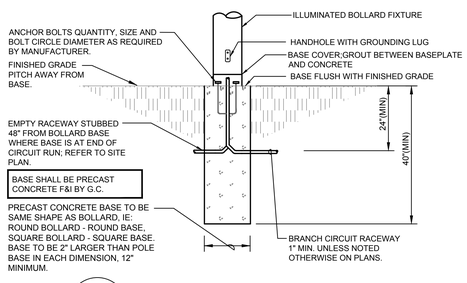

2 / E0.3 TYPE SL1 BOLLARD BASE DETAIL

SCALE: N.T.S.

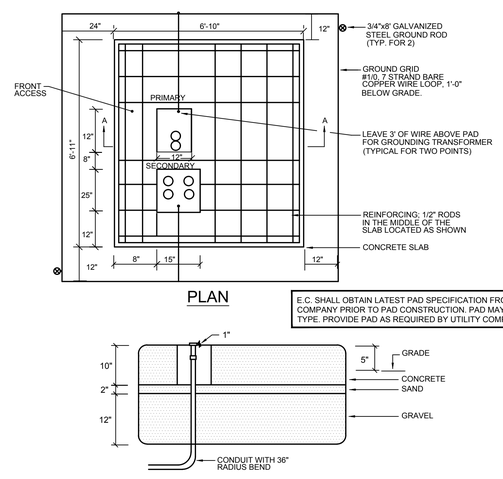

E.C. SHALL OBTAIN LATEST PAD SPECIFICATION FROM UTILITY COMPANY PRIOR TO PAD CONSTRUCTION. PAD MAY BE PRE-CAST TYPE. PROVIDE PAD AS REQUIRED BY UTILITY COMPANY.

3 / E0.3 PADMOUNT TRANSFORMER BASE DETAIL

SCALE: N.T.S.

JOHNSON ROBERTS ASSOCIATES INC.
ARCHITECTS

15 PROPERZI WAY
SOMERVILLE, MA
01243 - 3228

GARCIA•GALUSKA•DESOUSA
CONSULTING ENGINEERS INC.
370 FAUNCE CORNER ROAD, DARTMOUTH, MA 02747-1317
508-998-0700 • FAX 508-998-0983 • E-MAIL info@g-g-d.com

Revisions:

PRELIMINARY ON-SITE PARKING REVISIONS

CONCORD FREE PUBLIC LIBRARY EXPANSION

CONCORD, MA

Sheet Title:

Electrical Site Plan

Date: 8-June-2020 Drawn By: MLP

Scale: 1"=20'-0" Project No.: 1714

E0.3

JOHNSON ROBERTS ASSOCIATES INC. ARCHITECTS

Concord Free Public Library

Main Street View- New Proposal