PLANNING BOARD:

DEFINITIVE SUBDIVISION PLAN

FOR

48Y FITCHBURG TURNPIKE

MAP 15E
PARCEL 3419
CONCORD, MASSACHUSETTS

DATE	DATE REVISED	SHEET NUMBER	SHEET DESCRIPTION
09/08/2020	-	1	COVER SHEET
09/08/2020	-	2	LEGEND & NOTES
05/14/2019	07/15/2019	3	EXISTING CONDITIONS PLAN
09/08/2020	-	4	SITE CONTEXT PLAN
08/21/2020	-	5	PROPOSED PLAN OF LAND
09/08/2020	-	6	LAYOUT PLAN
09/08/2020	-	7	GRADING & DRAINAGE PLAN
09/08/2020	-	8	UTILITY PLAN
09/08/2020	-	9	PLAN & PROFILE
09/08/2020	-	10 ~ 13	CONSTRUCTION DETAILS

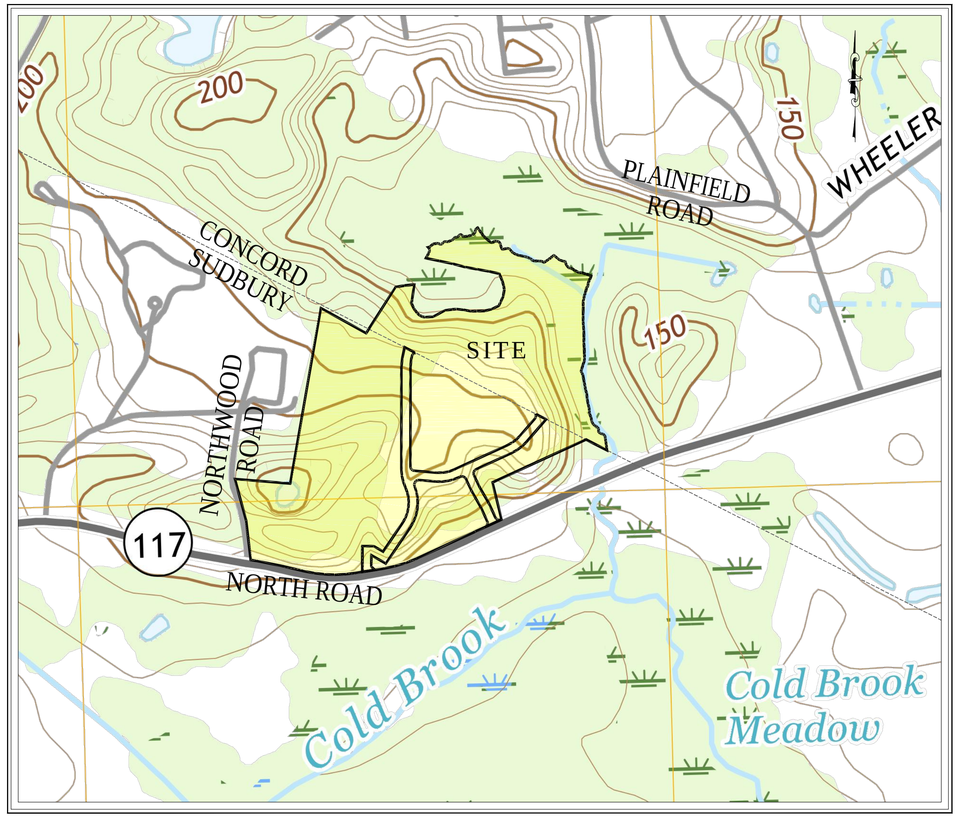

LOCUS PLAN
SCALE: 1"=400'

PREPARED BY:

CIVIL DESIGN GROUP, LLC

21 HIGH STREET SUITE 207
NORTH ANDOVER, MA 01845
www.cdgengineering.com
p: 978-794-5400
f: 978-965-3971
CONTACT: MATTHEW LEIDNER, P.E.

CONSULTANTS:

SURVEY:
SULLIVAN, CONNORS AND ASSOCIATES
121 BOSTON POST ROAD
SUDBURY, MA 01776
978-443-9566
CONTACT: VAROUJAN HAGOPIAN, P.L.S.

WETLANDS:
LEC ENVIRONMENTAL CONSULTANTS
380 LOWELL STREET, SUITE 101
WAKEFIELD, MA 01880
508-813-4129
CONTACT: RICHARD KIRBY

PREPARED FOR:

QUARRY NORTH ROAD, LLC
2134 SEVILLA WAY
NAPLES, FL 34109

NOT FOR CONSTRUCTION

CDG PROJECT #: 20022

SEAL:

COMMONWEALTH OF MASSACHUSETTS
MATTHEW A. LEIDNER
CIVIL
No. 45641
REGISTERED PROFESSIONAL ENGINEER

MATTHEW A. LEIDNER, P.E.

SHEET:

COVER SHEET

1

DATE: 09/04/2020

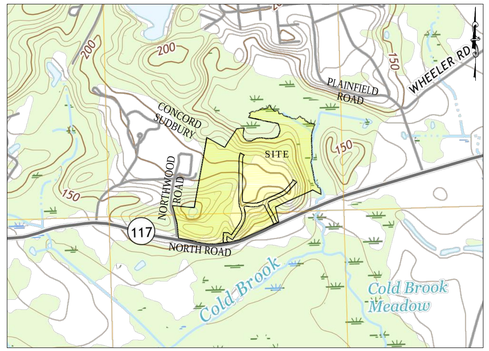

LOCUS PLAN
SCALE: 1"=1000'±

GENERAL NOTES

1. ZONING INFORMATION OBTAINED FROM THE TOWN OF CONCORD ZONING MAP, DATED APRIL 2012, THE TOWN OF CONCORD ZONING BYLAWS, REVISED THROUGH APRIL 2019. THE TRACT LIES WITHIN THE RESIDENCE AA ZONING DISTRICT.
2. THE PROJECT IS SUBJECT TO APPROVAL BY THE CONCORD PLANNING BOARD. THE CONTRACTOR SHALL BECOME FAMILIAR WITH AND ADHERE TO ALL CONSTRUCTION-RELATED REQUIREMENTS OF THE THIS APPROVAL.
3. THE CONTRACTOR SHALL GIVE TWENTY-FOUR (24) HOUR NOTICE TO PERTINENT TOWN DEPARTMENTS BEFORE COMMENCING ANY WORK IN THE FIELD.
4. ALTERNATIVE METHODS AND PRODUCTS OTHER THAN THOSE SPECIFIED MAY BE USED IF REVIEWED AND APPROVED BY THE OWNER, SITE ENGINEER, AND APPROPRIATE REGULATORY AGENCY PRIOR TO INSTALLATION.
5. THE CONTRACTOR SHALL SUBMIT SHOP DRAWINGS OF ALL PRODUCTS, MATERIALS, AND PLANT SPECIFICATIONS TO THE OWNER AND SITE ENGINEER FOR REVIEW AND APPROVAL PRIOR TO FABRICATION OR DELIVERY TO THE SITE. ALLOW A MINIMUM OF 14 WORKING DAYS FOR REVIEW.
6. THE CONTRACTOR SHALL PROVIDE AS-BUILT RECORDS OF ALL CONSTRUCTION (INCLUDING UNDERGROUND UTILITIES) TO THE OWNER AT THE END OF THE CONSTRUCTION.
7. NO EARTH IS PROPOSED TO BE REMOVED FROM THE SUBDIVISION TRACT IN CONJUNCTION WITH THIS DEFINITIVE SUBDIVISION PLAN.

SITE & DEMOLITION NOTES

1. THE LOCATION AND ELEVATION OF EXISTING UTILITIES AND STRUCTURES SHOWN ON THESE PLANS ARE BASED ON MEASUREMENTS TAKEN IN THE FIELD AND DISCOVERED RECORDS FROM VARIOUS UTILITY COMPANIES AND/OR FROM THE MUNICIPALITY. THIS INFORMATION SHALL NOT BE CONSIDERED EXACT AND THE CONTRACTOR SHALL VERIFY ALL UNDERGROUND UTILITY LOCATIONS PRIOR TO COMMENCEMENT OF CONSTRUCTION ACTIVITIES. CONTRACTOR SHALL NOTIFY "DIG SAFE" (811) AT LEAST 72 HOURS PRIOR TO ANY EXCAVATION TO REQUEST EXISTING UTILITY MARK OUT LOCATIONS. THE CONTRACTOR SHALL NOTIFY THE ENGINEER IMMEDIATELY IF EXISTING UTILITY LOCATIONS CONFLICT WITH THE PROPOSED DEVELOPMENT PROGRAM SO THAT A REMEDIAL ACTION CAN TAKE PLACE PRIOR TO ANY WORK. THE CONTRACTOR IS RESPONSIBLE FOR RELOCATING ALL EXISTING UTILITIES AS A RESULT OF THE PROPOSED DEVELOPMENT.
2. EXISTING BASE INFORMATION INCLUDING PROPERTY LINE, STRUCTURES, UTILITIES AND TOPOGRAPHY ARE TAKEN FROM PLAN ENTITLED "EXISTING CONDITIONS PLAN OF #16, 36, 0 NORTH STREET IN SUDBURY, MASS.," PREPARED BY SULLIVAN, CONNORS, AND ASSOCIATES, LAST UPDATED JULY 15, 2019, CONSISTING OF 1 SHEET.
3. ELEVATIONS SHOWN ARE BASED ON THE DATUM REFERENCED ON THE EXISTING CONDITIONS PLAN.
4. ALL WORK MUST BE INSPECTED PER TOWN REQUIREMENTS. CONTRACTOR SHALL CONTACT THE TOWN BUILDING DEPARTMENT PRIOR TO THE START OF WORK.
5. THE CONTRACTOR SHALL BE RESPONSIBLE FOR IMPLEMENTING AND MAINTAINING ALL CONSTRUCTION RELATED CONDITIONS OUTLINED IN THE APPROVALS IN ADDITION TO THE ITEMS OUTLINED IN THESE CONSTRUCTION DOCUMENTS.
6. THE CONTRACTOR SHALL ARRANGE A PRE-CONSTRUCTION MEETING WITH THE ENGINEER AND MUNICIPAL OFFICIALS PRIOR TO THE START OF CONSTRUCTION.
7. THE CONTRACTOR SHALL BE RESPONSIBLE FOR OBTAINING AND PAYING FOR ALL PERMITS AND UTILITY CONNECTION/DISCONNECTION FEES RELATED TO THE PROJECT. CONTRACTOR SHALL NOTIFY AND COORDINATE ALL UTILITY WORK WITH THE APPLICABLE UTILITY COMPANIES AND/OR LOCAL DEPARTMENTS. ALL PERMITS SHALL BE KEPT WITHIN THE TRAILER AND CLEARLY VISIBLE.
8. FILL MATERIAL(S) SHALL NOT CONTAIN HAZARDOUS MATERIALS.
9. THE CONTRACTOR IS RESPONSIBLE FOR THE GENERAL UPKEEP OF THE SITE DURING THE CONSTRUCTION PROCESS.

SITE LAYOUT NOTES

1. ALL STATION LABELS PERTAIN TO CENTERLINE OF ROAD GEOMETRY.
2. CURB WITHIN THE SITE LIMITS SHALL BE CAPE COD BERM (CCB), WITH VERTICAL GRANITE CURB (VGC) AT CATCH BASINS AS SHOWN ON THE SITE PLAN.
3. PAVEMENT MARKINGS AND STRIPING SHALL PAINTED WITH 2 COATS OF WHITE PAINT PER FEDERAL SPECIFICATION TI-P-115 TYPE 1: ALKYD.

GRADING & DRAINAGE NOTES

1. THE ELEVATIONS SHOWN ON THIS PLAN ARE BASED ON THE DATUM REFERENCE USED ON THE EXISTING CONDITIONS SURVEY.
2. THE CONTRACTOR SHALL BE RESPONSIBLE FOR ESTABLISHING AND MAINTAINING ALL CONTROL POINTS AND ELEVATION BENCHMARKS THROUGHOUT CONSTRUCTION.
3. UNLESS OTHERWISE SPECIFIED, THE CONTRACTOR SHALL PROVIDE AS-BUILT RECORDS OF ALL CONSTRUCTION (INCLUDING UNDERGROUND UTILITIES) TO THE OWNER AT THE END OF THE CONSTRUCTION.
4. ALL DISTURBED AREAS OUTSIDE THE LIMIT OF WORK SHALL BE RESTORED IN KIND.
5. PROPOSED CATCH BASINS SHALL INCLUDE ELIMINATOR HOODS AS SPECIFIED IN THE DETAILS.
6. UNLESS OTHERWISE SPECIFIED, ALL NEW DRAINAGE PIPE SHALL BE DUAL WALL CORRUGATED HDPE (ADS N-12 OR APPROVED EQUAL), RATED FOR H-20 LOADING, MINIMUM 12" COVER (UNLESS GREATER COVER IS REQUIRED BY THE MANUFACTURER), AND LAID AT A MINIMUM SLOPE OF 0.005'/'.
7. SEE DETAIL SHEETS FOR WATER QUALITY UNITS MANUFACTURER AND MODELS.
8. GALVANIZED STEEL TRASH RACKS SHALL BE INSTALLED ON OPEN ENDS OF ALL INLET AND DISCHARGE DRAIN PIPES 12" OR LARGER IN DIAMETER. TRASH RACKS SHALL BE SIZED TO FIT THE SPECIFIC PIPE FOR WHICH THEY WILL BE USED AND SHALL BE REMOVABLE FOR SERVICING THE PIPE.
9. ELEVATION OF LANDSCAPED AREAS ARE GIVEN AT PLANTED GRADE.
10. ANY RETAINING WALLS GREATER THAN 4' IN EXPOSED HEIGHT SHALL BE DESIGNED BY A PROFESSIONAL STRUCTURAL ENGINEER.

UTILITY NOTES

1. ALL UTILITIES ARE TO BE LOCATED UNDERGROUND UNLESS OTHERWISE NOTED.
2. ALL UTILITIES, PIPE MATERIALS, STRUCTURES, INSTALLATION METHODS, AND TESTING SHALL CONFORM TO MUNICIPALITY STANDARDS AND REQUIREMENTS. THE CONTRACTOR SHALL COORDINATE INSPECTIONS BY THE MUNICIPALITY WHEN REQUIRED.
3. WATER WILL BE SUPPLIED TO THE PROJECT VIA THE SUBURY WATER DISTRICT DISTRIBUTION SYSTEM.
4. ON-SITE WATER MAIN SHALL BE 8" CLASS 52 CLDI WITH A MINIMUM OF 5' OF COVER EXCEPT AS NOTED OR DETAILED OTHERWISE.
5. THIS SUBDIVISION DOESN NOT GENERATE ANY SEWER FLOW AND THEREFRE DOES NOT REQUIRE PROVISIONS FOR SEWER INFRASTRUCTURE.
6. THE CONTRACTOR SHALL COORDINATE ALL PROPOSED GAS, ELECTRIC, TELEPHONE, AND CABLE UTILITY WORK WITH THE RESPECTIVE UTILITY COMPANIES THE PROPOSED CONNECTION LOCATIONS AND DETAILS PROVIDED HEREIN ARE FOR REPRESENTATION PURPOSES ONLY. FINAL CONNECTION POINTS AND DETAILS SHALL BE AS DETERMINED AND REQUIRED BY THE UTILITY COMPANIES.
7. GAS MAIN AND SERVICE SIZING SHALL BE AS DETERMINED BY THE UTILITY COMPANY.
8. PIPE MATERIALS SHOWN ON THIS PLAN ARE SUBJECT TO SUBSTITUTION AT THE TIME OF CONSTRUCTION. ANY ALTERNATIVE PIPE MATERIAL SHALL CONFORM TO MUNICIPAL AND INDUSTRY STANDARDS FOR THE SELECTED APPLICATION.

SOIL EROSION AND SEDIMENTATION CONTROL NOTES

1. THIS SITE IS SUBJECT TO THE NATIONAL POLLUTANT DISCHARGE ELIMINATION SYSTEM (NPDES) PROGRAM OF THE UNITED STATES ENVIRONMENTAL PROTECTION AGENCY. SITE OPERATORS SHALL CONFORM TO MEET THE CRITERIA FOR A NPDES GENERAL PERMIT FOR STORMWATER DISCHARGES FROM CONSTRUCTION ACTIVITIES.
2. ADAPTATION TO ACTUAL FIELD CONDITIONS MAY WARRANT VARIATIONS FROM WHAT IS SHOWN ON THESE PLANS FOR EROSION CONTROLS IN ORDER TO MAXIMIZE THE EFFECTIVENESS OF THE CONTROLS.
3. THE CONTRACTOR IS RESPONSIBLE FOR IMPLEMENTING AND MAINTAINING ALL CONSTRUCTION RELATED CONDITIONS OUTLINED IN THE APPROVALS IN ADDITION TO THE ITEMS OUTLINED IN THESE CONSTRUCTION DOCUMENTS. THE SEQUENCING PLANS INCLUDED HEREIN ARE PROVIDED AS A GUIDANCE DOCUMENT TO ASSIST IN THE IMPLEMENTATION OF EROSION/SEDIMENTATION CONTROLS AND STABILIZATION OF THE SITE. ADAPTATION TO ACTUAL FIELD CONDITIONS MAY WARRANT VARIATIONS FROM WHAT IS SHOWN ON THESE PLANS TO MAXIMIZE THE EFFECTIVENESS OF THE CONTROLS.
4. THE CONTRACTOR SHALL ADHERE TO PROCEDURES OUTLINED IN THE STORMWATER POLLUTION PREVENTION PLAN (SWPPP) IN ACCORDANCE WITH THE EPA NPDES CONSTRUCTION GENERAL PERMIT REQUIREMENTS.
5. IN ACCORDANCE WITH THE NPDES CONSTRUCTION GENERAL PERMIT AND ASSOCIATED STORMWATER POLLUTION PREVENTION PLAN (SWPPP), EROSION CONTROL MEASURES SHALL BE INSPECTED AT LEAST EVERY 14 DAYS AND WITHIN 24 HOURS OF A 0.25" STORM. REPORTS DOCUMENTING THE RESULTS OF EACH INSPECTION AND ANY CORRECTIVE ACTIONS SHALL BE KEPT ON-FILE WITH THE SWPPP.
6. PROPOSED EROSION AND SEDIMENTATION CONTROL MEASURES WILL INCLUDE SILTATION FENCES, HAY BALES, CRUSHED STONE, RIPRAP, LOAM/SEED, HYDROSEEDING, MULCHING, EROSION CONTROL MATTING, DIVERSION BERMS, AND SEDIMENTATION BASINS AS FURTHER DESCRIBED HEREIN.
7. SILTATION FENCES AND WATTLES WILL BE USED FOR THE PERIMETER EROSION CONTROL BARRIER AS SHOWN ON THIS PLAN AND ELSEWHERE AS CONDITIONS WARRANT. HAY BALES WILL BE USED TO PROTECT OFFLINE CATCH BASINS (PRIOR TO BINDER) AND ELSEWHERE AS CONDITIONS WARRANT. THE CONTRACTOR WILL BE REQUIRED TO KEEP A REASONABLE STOCK OF SILTATION FENCE, WATTLES, AND HAY BALES ON SITE TO BE ABLE TO SUPPLEMENT OR MAKE REPAIRS AS NECESSARY.
8. LOAMING AND SEEDING OR HYDROSEEDING WILL BE USED AS A PERMANENT STABILIZATION MEASURE FOR ALL REVEGETATED AREAS OF THE SITE.
9. ALL PROPOSED SLOPES 3:1 AND STEEPER SHALL BE STABILIZED WITH AN EROSION CONTROL MATTING AND SHALL BE HYDROSEEDED.
10. MULCHING MAY BE USED TO REINFORCE SEEDED AREAS WHERE EROSION CONTROL MATTING IS NOT REQUIRED OR WARRANTED, BUT WHERE SOME PROTECTION IS WARRANTED. MULCHING MAY ALSO BE USED TO STABILIZE AREAS WHERE CONSTRUCTION ACTIVITIES WILL TEMPORARILY CEASE FOR MORE THAN 14 DAYS.
11. SEDIMENTATION BASINS SHALL BE USED THROUGHOUT THE SITE TO TREAT RUNOFF. DIVERSION BERMS SHALL BE UTILIZED TO DIVERT UNTREATED STORMWATER TO THE SEDIMENTATION BASINS. SEDIMENTATION BASINS AND DIVERSION BERMS SHALL BE ADDED, REMOVED, AND ADJUSTED AS THE SITE EVOLVES THROUGHOUT THE CONSTRUCTION PROCESS.
12. UPON CONVERTING ANY TEMPORARY SEDIMENTATION BASINS TO PERMANENT DETENTION/INFILTRATION BASINS, THE BASINS SHALL BE CLEANED OF ALL ACCUMULATED SEDIMENT TO ENSURE THAT THE VOLUMETRIC AND INFILTRATION DESIGN CAPACITIES ARE MAINTAINED.
13. STABILIZATION MEASURES SHALL BE INITIATED AS SOON AS PRACTICABLE IN PORTIONS OF THE SITE WHERE CONSTRUCTION ACTIVITIES HAVE TEMPORARILY OR PERMANENTLY CEASED, IN ACCORDANCE WITH THE NPDES CONSTRUCTION GENERAL PERMIT. STABILIZATION MEASURES SHALL BE IMPLEMENTED NOT MORE THAN 14 DAYS AFTER THE CONSTRUCTION ACTIVITY IN THAT PORTION OF THE SITE HAS TEMPORARILY OR PERMANENTLY CEASED, UNLESS PRECLUDED BY SNOW COVER OR FROZEN GROUND CONDITIONS IN WHICH CASE STABILIZATION MEASURES MUST BE INITIATED AS SOON AS PRACTICABLE. WHERE CONSTRUCTION ACTIVITY ON A PORTION OF THE SITE IS TEMPORARILY CEASED, AND EARTH DISTURBING ACTIVITIES WILL BE RESUMED WITHIN 14 DAYS, TEMPORARY STABILIZATION MEASURES DO NOT HAVE TO BE INITIATED ON THAT PORTION OF THE SITE.
14. EROSION AND SEDIMENTATION CONTROLS WILL BE REQUIRED TO BE MAINTAINED THROUGHOUT THE DURATION OF THE PROJECT TO ENSURE THAT THEY FUNCTION AS INTENDED. DEFICIENCIES WILL BE CORRECTED BY CLEANING, REPAIRING, OR REPLACING THE AFFECTED CONTROL(S) OR PORTION(S) THEREOF TO REESTABLISH PROPER FUNCTIONING AS QUICKLY AS POSSIBLE. SEDIMENTATION CONTROLS WILL BE REQUIRED TO BE CLEANED OR REPLACED WHEN THE ACCUMULATED SEDIMENT EXCEEDS 50 PERCENT OF THE DESIGN CAPACITY OF THE CONTROL. ANY OFF-SITE ACCUMULATIONS OF SEDIMENT WILL BE REQUIRED TO BE REMOVED AS QUICKLY AS POSSIBLE IN A MANNER THAT MINIMIZES ADDITIONAL DISTURBANCE.
15. EROSION CONTROL BARRIER (WHERE SHOWN) REPRESENTS THE LIMIT OF WORK. WHERE NO EROSION CONTROL BARRIER IS REQUIRED (SUCH AS UPSLOPE AREAS), A LIMIT OF WORK LINE HAS BEEN SHOWN. WHERE NO EROSION CONTROL BARRIER IS REQUIRED, THE LIMIT OF WORK SHALL BE DELINEATED IN THE FIELD BY A VISUAL BARRIER SUCH AS TEMPORARY CONSTRUCTION FENCING IN ORDER TO KEEP CONSTRUCTION ACTIVITIES OUT OF THOSE AREAS.
16. THE PROPOSED ONSITE DRAINAGE SYSTEM SHALL BE INSTALLED AS SOON AS PRACTICABLE. ALL EXISTING AND PROPOSED CATCH BASIN INLETS SHALL BE PROTECTED WITH A SILT SACK (SEE DETAIL).
17. DEWATERING OPERATIONS MUST DISCHARGE DIRECTLY INTO A SEDIMENT BASIN OR OTHER SETTLING AREA TO ALLOW FOR SUFFICIENT SETTLING PRIOR TO DISCHARGE.
18. DUST SHALL BE CONTROLLED BY AN APPROVED METHOD ACCORDING TO LOCAL, STATE AND FEDERAL STANDARDS.
19. ABUTTING PROPERTIES SHALL BE PROTECTED FROM EXCAVATION AND FILLING OPERATIONS FROM THIS PROJECT AT ALL TIMES. WORK ON ABUTTING PROPERTY SHALL REQUIRE WRITTEN AUTHORIZATION FROM THE OWNER PRIOR TO ANY LAND DISTURBANCE.
20. THE EROSION CONTROL MEASURES ILLUSTRATED IN THIS PLAN SET SHALL BE THE MINIMUM REQUIRED CONTROLS IMPLEMENTED.
21. STOCKPILING LOCATIONS SHALL BE FIELD DETERMINED AND SHALL NOT LIE WITHIN THE 100-FOOT WETLAND BUFFER. DIVERSION BERMS AND EROSION CONTROL BARRIERS SHALL BE INSTALLED DOWNGRADIENT OF STOCKPILES IN ACCORDANCE WITH THE PLAN AND DETAILS.
22. ESTIMATED STABILIZED AREA AS SHOWN ON THE SEQUENCING PLANS PROVIDED HEREIN REPRESENTS THE APPROXIMATE AREA THAT WILL BE STABILIZED (EITHER TEMPORARILY OR PERMANENTLY) BY THE END OF THE CONSTRUCTION SEQUENCE.
23. CRUSHED STONE AND/OR RIPRAP SHALL BE USED TO CONSTRUCT THE TRACKING PAD, CUT SLOPE TREATMENT AREAS, CHECK DAMS, SEDIMENTATION BASIN OUTLET PROTECTION, AND ELSEWHERE AS CONDITIONS WARRANT. THE CONTRACTOR WILL BE REQUIRED TO KEEP A REASONABLE STOCK OF CRUSHED STONE AND RIPRAP ON SITE TO BE ABLE TO SUPPLEMENT OR MAKE REPAIRS AS NECESSARY.

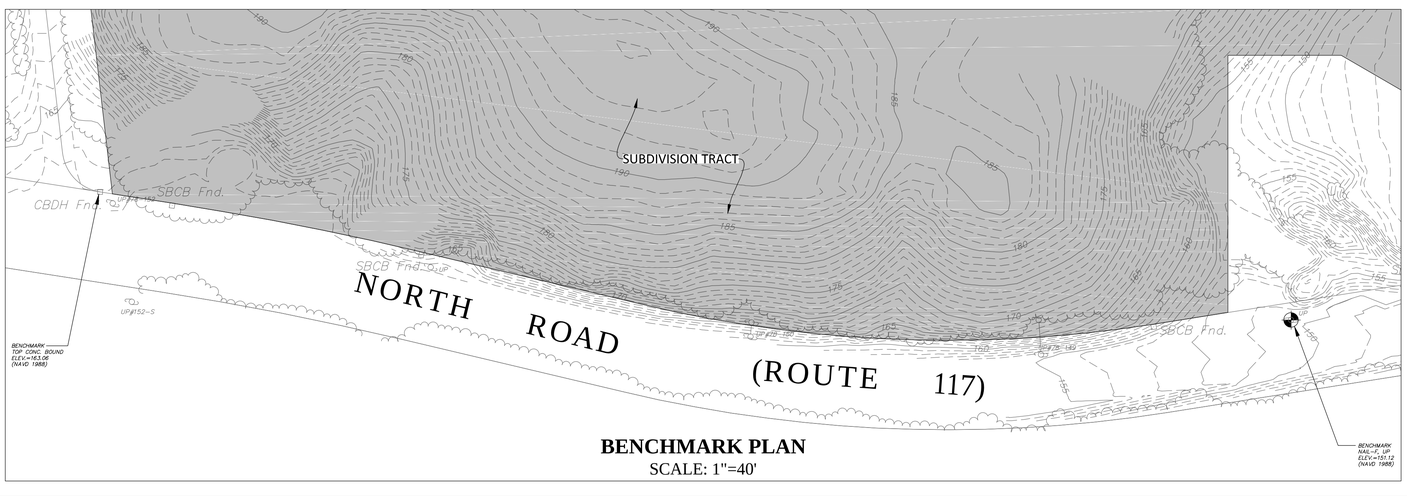

BENCHMARK PLAN
SCALE: 1"=40'

LEGEND

EXISTING	PROPOSED	DESCRIPTION
		PROPERTY LINE
	SINGLE GRATE / DOUBLE GRATE	CATCH BASIN
		DRAIN MANHOLE
		SEWER MANHOLE
D	D	DRAIN PIPE
GM G	G	GAS LINE
OHW	OH	OVERHEAD WIRES
ET&C	ET&C	UNDERGROUND WIRES
S	S	SEWER LINE
WS W	W W	WATER LINE
FM	FM	FORCE MAIN
	FD	FOUNDATION DRAIN
	RD	ROOF DRAIN
498	498	MINOR CONTOUR
500	500	INDEX CONTOUR
		STONE WALL
		RET. WALL (STRUCTURAL)
		RET. WALL (NONSTRUCTURAL)
		TREELINE
		BUILDING
		CRUSHED STONE
		RIPRAP
		CONSTRUCTION ENTRANCE
		MILL & OVERLAY
		HYDRANT
		SIGN
		SITE/STREET LIGHT
		BOLLARD LIGHT
		UTILITY POLE
		OUTLET CONTROL STRUCTURE
		FLARED END SECTION
TP-1		TEST PIT LOCATION
	TC 100.50 BC 100.00	TOP/BOTTOM CURB ELEVATION
300.5x	100.00	SPOT ELEVATION
	X'R	CURB RADIUS
		ACCESSIBLE MARKINGS

GENERAL ABBREVIATIONS

ASSESSORS PARCEL	A.P.
BOTTOM OF CURB	BC
BEST MANAGEMENT PRACTICE	BMP
BORDERING VEGETATED WETLAND	BVW
CATCH BASIN	CB
CAPE COD BERM	CCB
CELLAR FLOOR	CF
CENTERLINE	CL
CLEANOUT	CO
CONCRETE SURFACE	CONC.
DRAIN MANHOLE	DMH
DIRECTION SIGN	DS
EMERGENCY SPILLWAY	ES
FLARED END SECTION	FES
FOOTING DRAIN	FD
FRONT YARD SETBACK	FYS
GATE VALVE	GV
GAS TRAP	GT
HIGH DENSITY POLYETHYLENE	HDPE
HIGH POINT	HP
INVERT ELEVATION	I=
IRON PIPE/PIN	IP
LINEAL FEET	LF
LOW POINT	LP
LIMIT OF WORK	LOW
MATCH EXISTING	ME
NYLOPLAST DRAINAGE STRUCTURE	NP
OUTLET CONTROL STRUCTURE	OCS
PRECAST CONCRETE CURB	PCC
POLYVINYL CHLORIDE	PVC
RADIUS	X'R
RIM ELEVATION	R=
REAR YARD SETBACK	RYS
ROOF DRAIN	RD
SLOPED GRANITE CURB	SGC
SIDE YARD SETBACK	SYS
SUBSURFACE INFILTRATION SYSTEM	SIS
THRUST BLOCK	TB
TOP OF CURB	TC
TOP OF FOUNDATION	TF
TOP OF WALL	TW
TYPICAL	TYP.
UNDERDRAIN	UD
UTILITY POLE	UP
WATER QUALITY UNIT	WQU
VERTICAL GRANITE CURB	VGC

NOT FOR CONSTRUCTION

CDG PROJECT #: 20022

REVISIONS:

REV	DATE	COMMENT
1		
2		
3		
4		
5		
6		
7		
8		
9		
10		

PLANNING BOARD:

SEAL: COMMONWEALTH OF MASSACHUSETTS MATTHEW A. LEIDNER CIVIL No. 45641 REGISTERED PROFESSIONAL ENGINEER

MATTHEW A. LEIDNER, P.E.

PREPARED BY:
CIVIL DESIGN GROUP, LLC
21 HIGH STREET, SUITE 207
NORTH ANDOVER, MA 01845
www.cdgengineering.com
p: 978-794-5400 f: 978-965-3971

OWNER:
TOWN OF SUDBURY, MA
278 OLD SUDBURY ROAD
SUDBURY, MA 01776

APPLICANT:
QUARRY NORTH ROAD LLC
2134 SEVILLA WAY
NAPLES, FL 34109

PROJECT:
DEFINITIVE SUBDIVISION PLAN
MAP 15E, PARCEL 3419
48Y FITCHBURG TURNPIKE
CONCORD, MASSACHUSETTS

SCALE:

SHEET:
LEGEND & NOTES
2

DATE: 09/08/2020

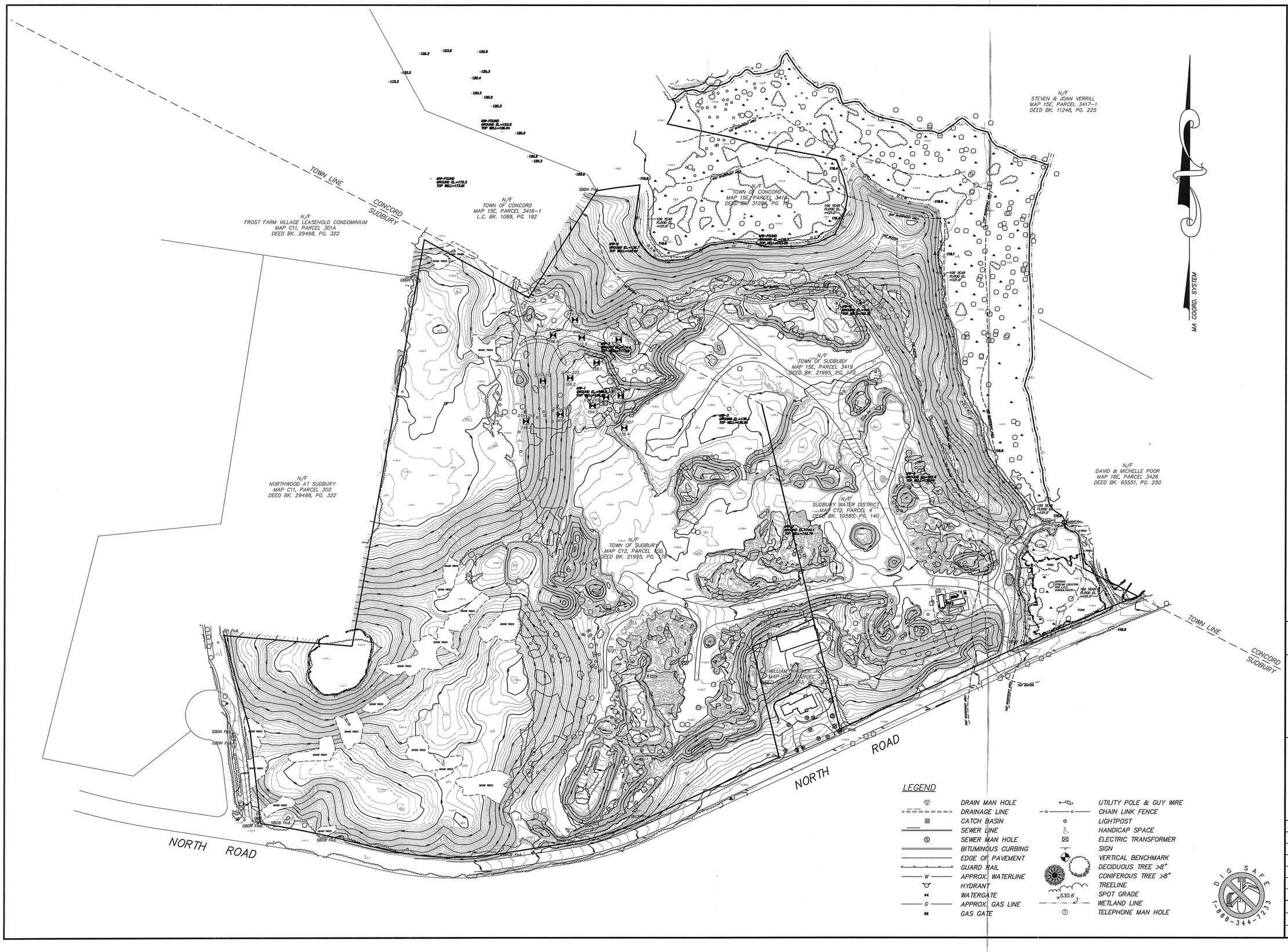

LEGEND

DRAIN MAN HOLE	UTILITY POLE & GUY WIRE
DRAINAGE LINE	CHAIN LINK FENCE
CATCH BASIN	LIGHTPOST
SEWER LINE	HANDICAP SPACE
SEWER MAN HOLE	ELECTRIC TRANSFORMER
BITUMINOUS CURBING	SIGN
EDGE OF PAVEMENT	VERTICAL BENCHMARK
GUARD RAIL	DECIDUOUS TREE >8"
W — APPROX. WATERLINE	CONIFEROUS TREE >8"
HYDRANT	TREELINE
WATERGATE	530.6 SPOT GRADE
G — APPROX. GAS LINE	WETLAND LINE
GAS GATE	TELEPHONE MAN HOLE

DIG SAFE 1-888-344-7233

GENERAL NOTES:

1. OWNERS OF ADJOINING PROPERTIES ARE SHOWN ACCORDING TO CURRENT TOWN OF SUDBURY AND TOWN OF CONCORD ASSESSORS RECORDS.

2. THIS PLAN IS BASED ON AN ON-THE-GROUND SURVEY BY CONNORSTONE ENGINEERING INC. PERFORMED IN OCTOBER 2018, AND APRIL 2019.

3. TOPOGRAPHIC INFORMATION SHOWN HEREON HAS BEEN PLOTTED FROM A COMBINATION OF AERIAL PHOTOGRAMMETRY PROVIDED BY BLUESKY GEOSPATIAL AND ON-THE-GROUND TOPOGRAPHY PERFORMED BY SULLIVAN CONNORS AND ASSOCIATES.

4. ELEVATIONS SHOWN HEREON REFER TO THE NAVD 1988 DATUM.

5. WETLAND FLAGS SHOWN HEREON WERE FLAGGED BY LEC ENVIRONMENTAL CONSULTANTS INC. AND LOCATED ON-THE-GROUND BY SULLIVAN CONNORS AND ASSOCIATES.

6. PERENNIAL STREAM LOCATIONS ARE PLOTTED FROM AERIAL PHOTOGRAMMETRY PROVIDED BY BLUESKY GEOSPATIAL. PER LEC ENVIRONMENTAL CONSULTANTS INC. A 12 FOOT WIDE CHANNEL WAS ASSIGNED TO THE STREAMS BASED ON THE USGS STREAMSTATS WATERSHED DATA. THE RIVERFRONT AREA BOUNDARIES DEPICTED HEREON EXTEND FROM THE WESTERN AND SOUTHERN EDGE OF THE 12 FOOT WIDE STREAM CHANNELS.

STREAM LOCATION IN POND HAS BEEN PLOTTED BASED ON A SKETCH PLAN PROVIDED BY LEC ENVIRONMENTAL CONSULTANTS INC.

6. A PORTION OF THE LOCUS SHOWN HEREON IS LOCATED WITHIN THE 100 YEAR FEDERAL FLOOD HAZARD AREA AS SHOWN ON THE FLOOD INSURANCE RATE MAPS FOR THE TOWN OF SUDBURY, MAP NUMBER 25017C0367F, DATED JULY 7, 2014.

COMMONWEALTH OF MASSACHUSETTS
VAROUJAN H. HAGOPIAN
No. 49665
PROFESSIONAL LAND SURVEYOR

5/14/19

PREPARED FOR:

CHRIS CLAUSSEN

SULLIVAN, CONNORS AND ASSOCIATES
LAND SURVEYING AND CIVIL ENGINEERING
121 BOSTON POST ROAD
SUDBURY, MASSACHUSETTS 01776
PHONE: 978-443-9566 FAX: 978-443-8915

EXISTING CONDITIONS PLAN OF #16, 36, 0 NORTH STREET IN SUDBURY, MASS.

7-15-19	TESTING LOCATIONS, STREAM SHOTS
REVISED:	DESCRIPTION:
DRAWN BY: VHH	CHECK BY: REM
DATE: MAY 14, 2019	
SCALE: 1"=100'	SHEET 3

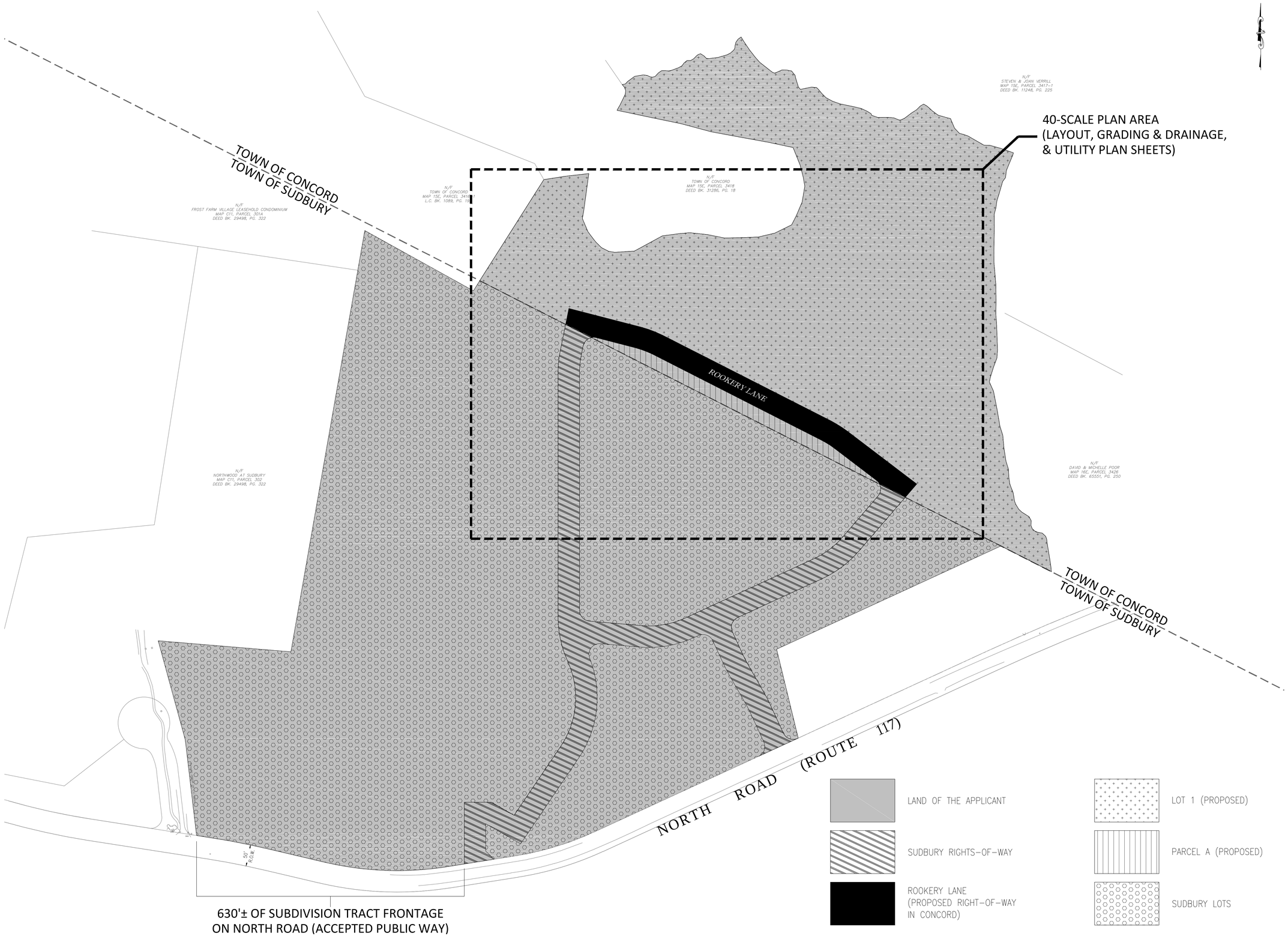

NOT FOR CONSTRUCTION

CDG PROJECT #: 20022

REVISIONS:

REV	DATE	COMMENT
1		
2		
3		
4		
5		
6		
7		
8		
9		
10		

PLANNING BOARD:

SEAL:

COMMONWEALTH OF MASSACHUSETTS
MATTHEW A. LEIDNER
CIVIL
No. 45641
REGISTERED PROFESSIONAL ENGINEER

MATTHEW A. LEIDNER, P.E.

PREPARED BY:

CIVIL DESIGN GROUP, LLC

21 HIGH STREET, SUITE 207
NORTH ANDOVER, MA 01845
www.cdgengineering.com
p: 978-794-5400 f: 978-965-3971

OWNER:

TOWN OF SUDBURY, MA

278 OLD SUDBURY ROAD
SUDBURY, MA 01776

APPLICANT:

QUARRY NORTH ROAD LLC

2134 SEVILLA WAY
NAPLES, FL 34109

PROJECT:

DEFINITIVE SUBDIVISION PLAN

MAP 15E, PARCEL 3419
48Y FITCHBURG TURNPIKE
CONCORD, MASSACHUSETTS

SCALE:

100 0 50 100 200

GRAPHIC SCALE IN FEET

SHEET:

SITE CONTEXT PLAN

4

DATE: 09/08/2020

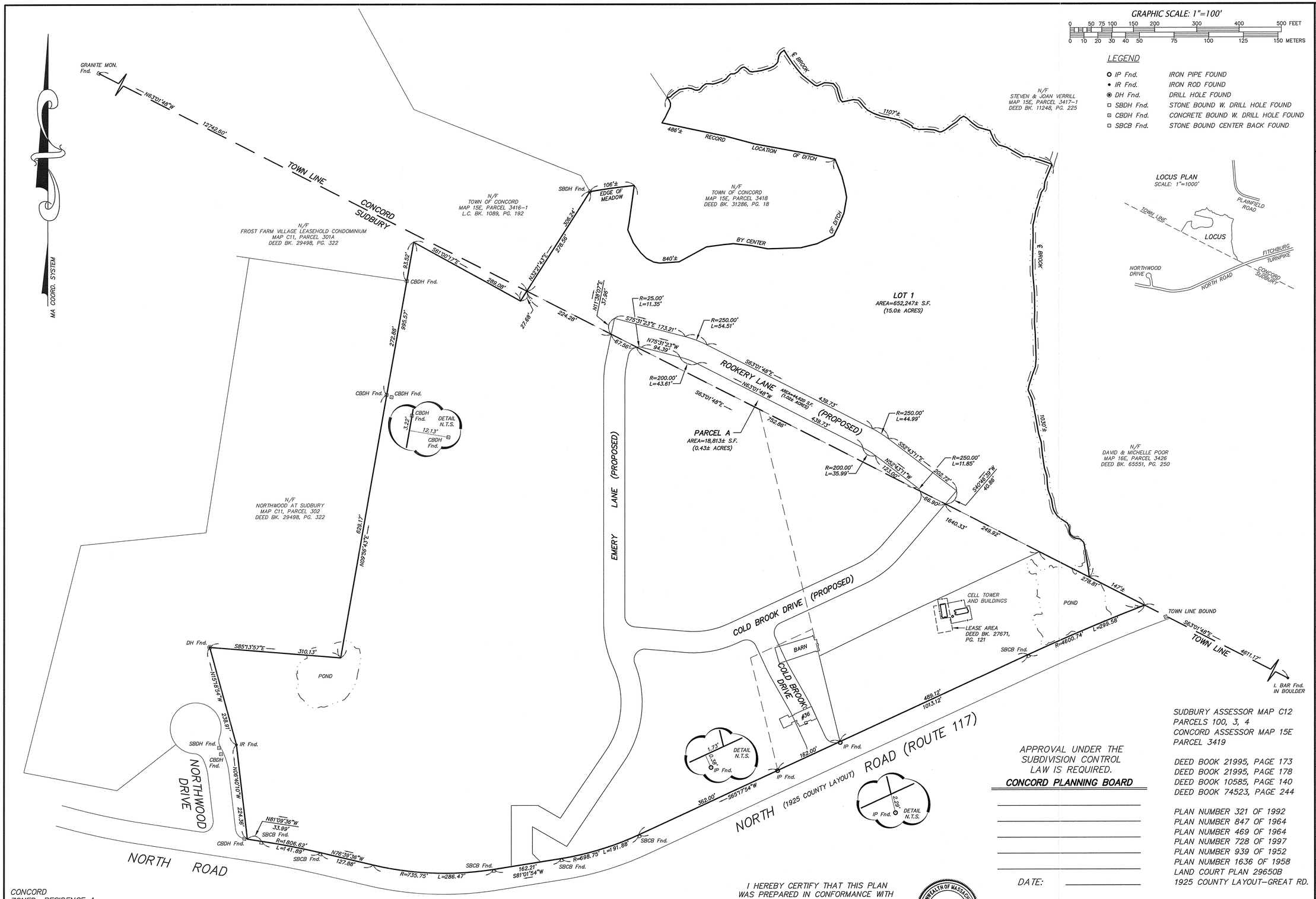

GENERAL NOTES:

1. OWNERS OF ADJOINING PROPERTIES ARE SHOWN ACCORDING TO CURRENT TOWN OF SUDBURY AND TOWN OF CONCORD ASSESSORS RECORDS.

2. THIS PLAN IS BASED ON AN ON-THE-GROUND SURVEY BY CONNORSTONE ENGINEERING INC. PERFORMED IN OCTOBER 2018, AND APRIL 2019.

3. PERENNIAL STREAM LOCATIONS ARE PLOTTED FROM AERIAL PHOTOGRAMMETRY PROVIDED BY BLUESKY GEOSPATIAL.

4. STREAM LOCATION IN POND HAS BEEN PLOTTED BASED ON A SKETCH PLAN PROVIDED BY LEC ENVIRONMENTAL CONSULTANTS INC. AND SHOULD BE CONSIDERED APPROXIMATE.

6. A PORTION OF THE LOCUS SHOWN HEREON IS LOCATED WITHIN THE 100 YEAR FEDERAL FLOOD HAZARD AREA AS SHOWN ON THE FLOOD INSURANCE RATE MAPS FOR THE TOWN OF SUDBURY, MAP NUMBER 25017C0367F, DATED JULY 7, 2014.

7. PARCEL A IS NOT TO BE CONSIDERED A BUILDING LOT AND IS INTENDED TO BE COMBINED WITH LAND IN SUDBURY.

CONCORD
ZONED: RESIDENCE A
AREA = 40,000 S.F.
FRONTAGE = 150 feet
MIN. LOT WIDTH = 120 feet
SETBACKS: FRONT = 40 feet
SIDE = 15 feet
REAR = 30 feet

I HEREBY CERTIFY THAT THIS PLAN WAS PREPARED IN CONFORMANCE WITH THE RULES AND REGULATIONS OF THE REGISTERS OF DEEDS.

8/21/20

VAROUJAN H. HAGOPIAN, P.L.S. 49665

COMMONWEALTH OF MASSACHUSETTS
VAROUJAN H. HAGOPIAN
No. 49665
PROFESSIONAL LAND SURVEYOR

APPROVAL UNDER THE SUBDIVISION CONTROL LAW IS REQUIRED.

CONCORD PLANNING BOARD

_____

_____

_____

_____

_____

DATE: _____

I, _____ CLERK OF THE TOWN OF CONCORD RECEIVED AND RECORDED APPROVAL FROM THE PLANNING BOARD OF THIS PLAN ON _____ AND NO APPEAL WAS TAKEN FOR TWENTY (20) DAYS THEREAFTER.

SUDBURY ASSESSOR MAP C12
PARCELS 100, 3, 4
CONCORD ASSESSOR MAP 15E
PARCEL 3419

DEED BOOK 21995, PAGE 173
DEED BOOK 21995, PAGE 178
DEED BOOK 10585, PAGE 140
DEED BOOK 74523, PAGE 244

PLAN NUMBER 321 OF 1992
PLAN NUMBER 847 OF 1964
PLAN NUMBER 469 OF 1964
PLAN NUMBER 728 OF 1997
PLAN NUMBER 939 OF 1952
PLAN NUMBER 1636 OF 1958
LAND COURT PLAN 29650B
1925 COUNTY LAYOUT-GREAT RD.

OWNERS:
TOWN OF SUDBURY
MAP 15E, PARCEL 3419
(LAND IN CONCORD)

SULLIVAN, CONNORS AND ASSOCIATES
LAND SURVEYING AND CIVIL ENGINEERING
121 BOSTON POST ROAD
SUDBURY, MASSACHUSETTS 01776
PHONE: 978-443-9566 FAX: 978-443-8915

PROPOSED
PLAN OF LAND
MAP 15E, PARCEL 3419
CONCORD, MASS.

REVISED:	DESCRIPTION:
DRAWN BY: VHH	CHECK BY: REM
DATE: AUGUST 21, 2020	
SCALE: 1"=100'	SHEET 5

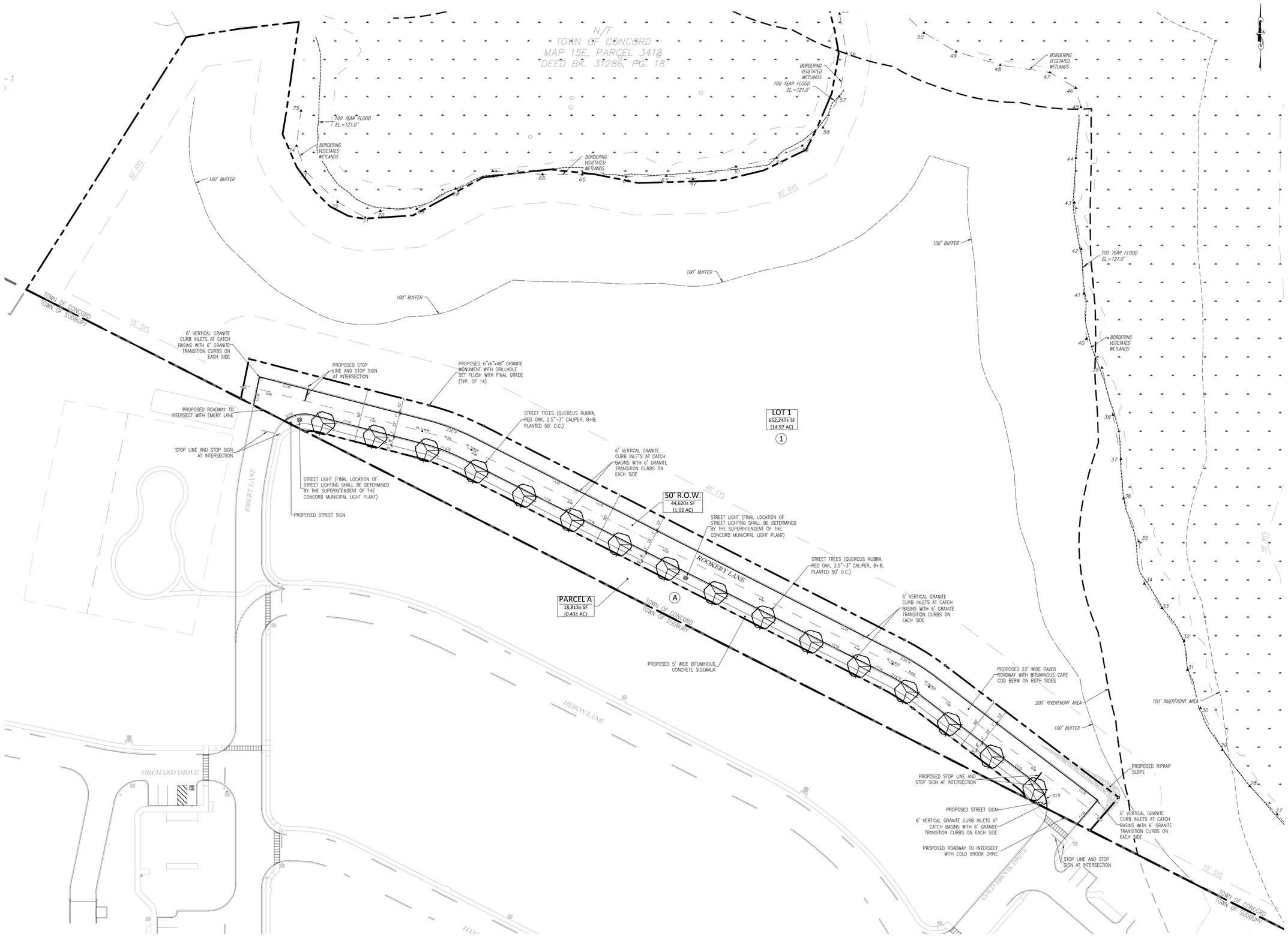

NOT FOR CONSTRUCTION

CDG PROJECT #: 20022

REVISIONS:

REV	DATE	COMMENT
1		
2		
3		
4		
5		
6		
7		
8		
9		
10		

PLANNING BOARD:

SEAL:

COMMONWEALTH OF MASSACHUSETTS
MATTHEW A. LEIDNER
CIVIL
No. 45641
REGISTERED PROFESSIONAL ENGINEER

MATTHEW A. LEIDNER, P.E.

PREPARED BY:

CIVIL DESIGN GROUP, LLC

21 HIGH STREET, SUITE 207
NORTH ANDOVER, MA 01845
www.cdgengineering.com
p: 978-794-5400 f: 978-965-3971

OWNER:

TOWN OF SUDBURY, MA

278 OLD SUDBURY ROAD
SUDBURY, MA 01776

APPLICANT:

QUARRY NORTH ROAD LLC

2134 SEVILLA WAY
NAPLES, FL 34109

PROJECT:

DEFINITIVE SUBDIVISION PLAN

MAP 15E, PARCEL 3419
48Y FITCHBURG TURNPIKE
CONCORD, MASSACHUSETTS

SCALE:

40 0 20 40 80

GRAPHIC SCALE IN FEET

SHEET:

LAYOUT PLAN

6

DATE: 09/08/2020

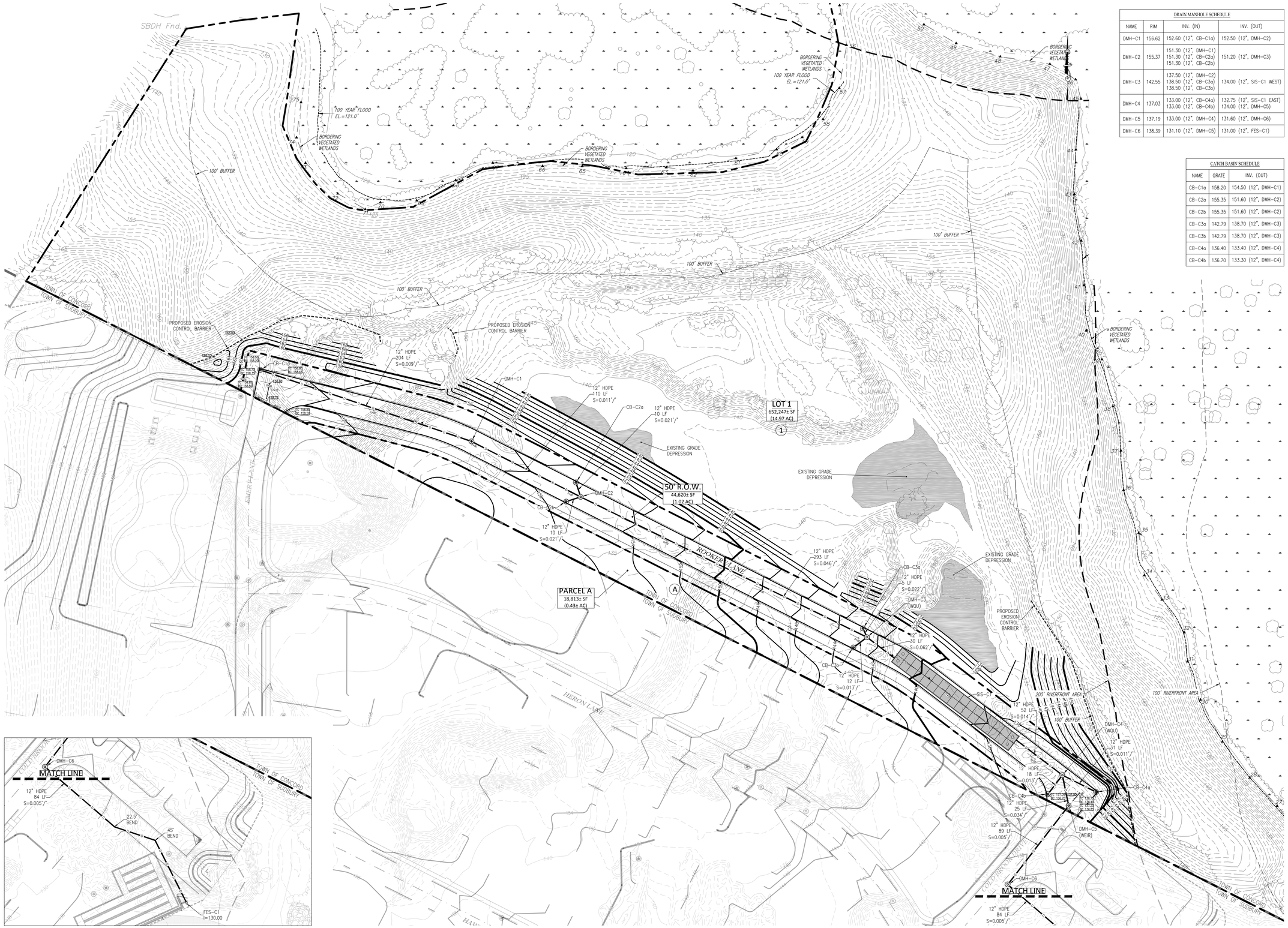

DRAIN MANHOLE SCHEDULE			
NAME	RIM	INV. (IN)	INV. (OUT)
DMH-C1	156.62	152.60 (12", CB-C1a)	152.50 (12", DMH-C2)
DMH-C2	155.37	151.30 (12", DMH-C1) 151.30 (12", CB-C2a) 151.30 (12", CB-C2b)	151.20 (12", DMH-C3)
DMH-C3	142.55	137.50 (12", DMH-C2) 138.50 (12", CB-C3a) 138.50 (12", CB-C3b)	134.00 (12", SIS-C1 WEST)
DMH-C4	137.03	133.00 (12", CB-C4a) 133.00 (12", CB-C4b)	132.75 (12", SIS-C1 EAST) 134.00 (12", DMH-C5)
DMH-C5	137.19	133.00 (12", DMH-C4)	131.60 (12", DMH-C6)
DMH-C6	138.39	131.10 (12", DMH-C5)	131.00 (12", FES-C1)

CATCH BASIN SCHEDULE		
NAME	GRATE	INV. (OUT)
CB-C1a	158.20	154.50 (12", DMH-C1)
CB-C2a	155.35	151.60 (12", DMH-C2)
CB-C2b	155.35	151.60 (12", DMH-C2)
CB-C3a	142.79	138.70 (12", DMH-C3)
CB-C3b	142.79	138.70 (12", DMH-C3)
CB-C4a	136.40	133.40 (12", DMH-C4)
CB-C4b	136.70	133.30 (12", DMH-C4)

NOT FOR CONSTRUCTION

CDG PROJECT #: 20022

REVISIONS:

REV	DATE	COMMENT
1		
2		
3		
4		
5		
6		
7		
8		
9		
10		

PLANNING BOARD:

SEAL:

COMMONWEALTH OF MASSACHUSETTS
MATTHEW A. LEIDNER
CIVIL
No. 45641
REGISTERED PROFESSIONAL ENGINEER

MATTHEW A. LEIDNER, P.E.

PREPARED BY:

CIVIL DESIGN GROUP, LLC

21 HIGH STREET, SUITE 207
NORTH ANDOVER, MA 01845
www.cdgengineering.com
p: 978-794-5400 f: 978-965-3971

OWNER:

TOWN OF SUDBURY, MA

278 OLD SUDBURY ROAD
SUDBURY, MA 01776

APPLICANT:

QUARRY NORTH ROAD LLC

2134 SEVILLA WAY
NAPLES, FL 34109

PROJECT:

DEFINITIVE SUBDIVISION PLAN

MAP 15E, PARCEL 3419
48Y FITCHBURG TURNPIKE
CONCORD, MASSACHUSETTS

SCALE:

40 0 20 40 80

GRAPHIC SCALE IN FEET

SHEET:

GRADING & DRAINAGE PLAN

7

DATE: 09/08/2020

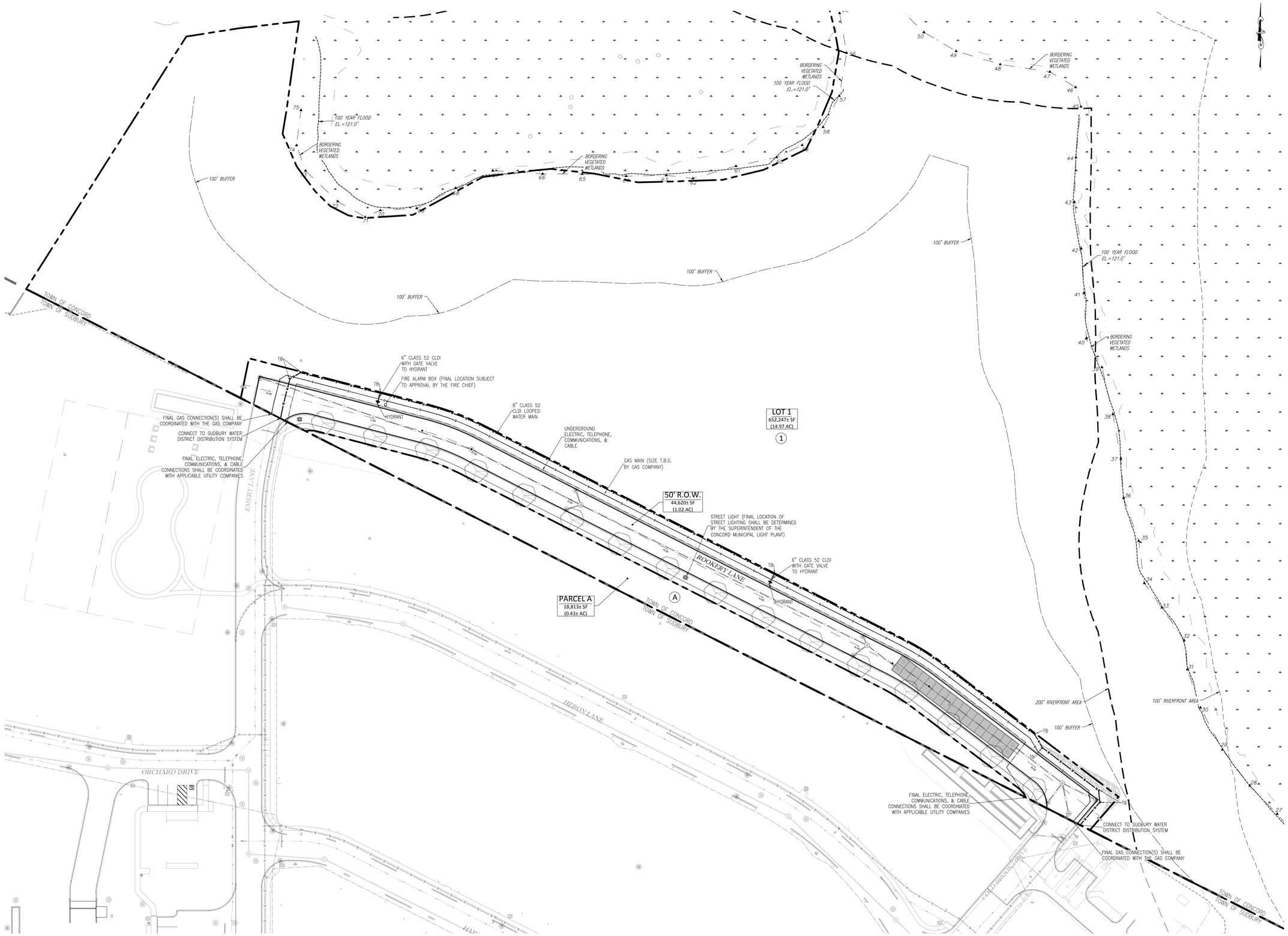

NOT FOR CONSTRUCTION

CDG PROJECT #: 20022

REVISIONS:

REV	DATE	COMMENT
1		
2		
3		
4		
5		
6		
7		
8		
9		
10		

PLANNING BOARD:

SEAL:

COMMONWEALTH OF MASSACHUSETTS
MATTHEW A. LEIDNER
CIVIL
No. 45641
REGISTERED PROFESSIONAL ENGINEER

MATTHEW A. LEIDNER, P.E.

PREPARED BY:

CIVIL DESIGN GROUP, LLC

21 HIGH STREET, SUITE 207
NORTH ANDOVER, MA 01845
www.cdgengineering.com
p: 978-794-5400 f: 978-965-3971

OWNER:

TOWN OF SUDBURY, MA

278 OLD SUDBURY ROAD
SUDBURY, MA 01776

APPLICANT:

QUARRY NORTH ROAD LLC

2134 SEVILLA WAY
NAPLES, FL 34109

PROJECT:

DEFINITIVE SUBDIVISION PLAN

MAP 15E, PARCEL 3419
48Y FITCHBURG TURNPIKE
CONCORD, MASSACHUSETTS

SCALE:

40 0 20 40 80

GRAPHIC SCALE IN FEET

SHEET:

UTILITY PLAN

8

DATE: 09/08/2020

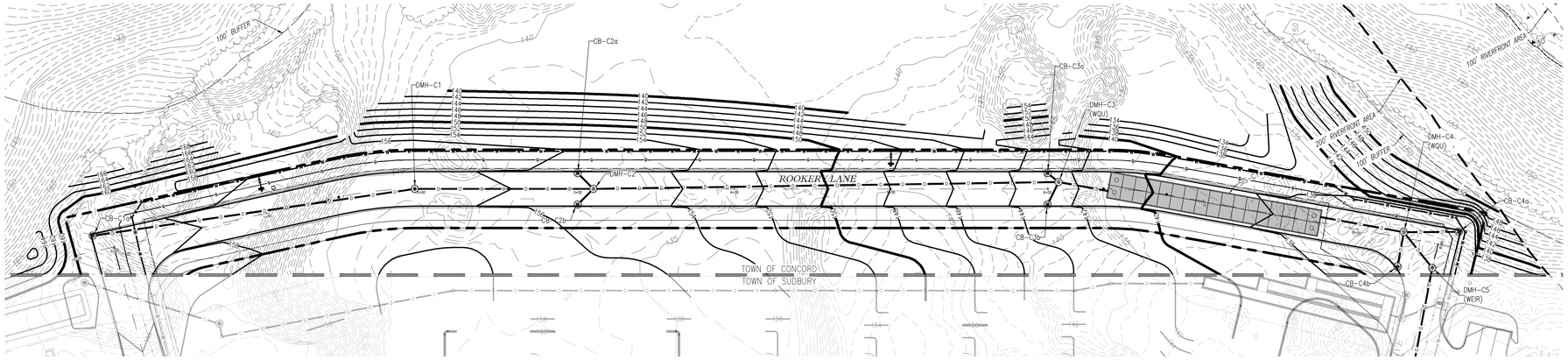

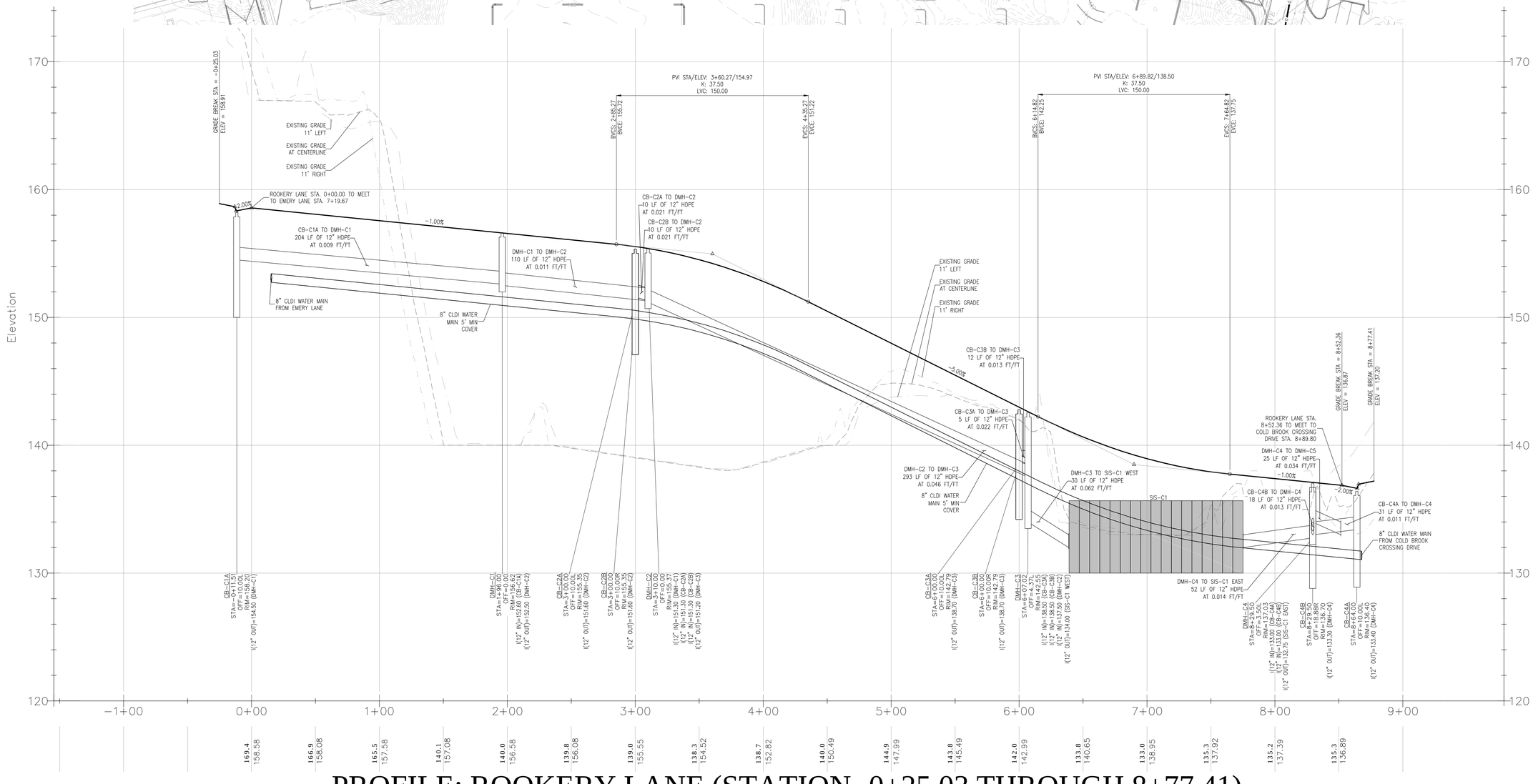

PROFILE: ROOKERY LANE (STATION -0+25.03 THROUGH 8+77.41)

HORIZONTAL SCALE: 1" = 40', VERTICAL SCALE: 1" = 4'

NOT FOR CONSTRUCTION

CDG PROJECT #: 20022

REVISIONS:

REV	DATE	COMMENT
1		
2		
3		
4		
5		
6		
7		
8		
9		
10		

PLANNING BOARD:

SEAL:

COMMONWEALTH OF MASSACHUSETTS
MATTHEW A. LEIDNER
CIVIL
No. 45641
REGISTERED PROFESSIONAL ENGINEER

MATTHEW A. LEIDNER, P.E.

PREPARED BY:

CIVIL DESIGN GROUP, LLC

21 HIGH STREET, SUITE 207
NORTH ANDOVER, MA 01845
www.cdgengineering.com
p: 978-794-5400 f: 978-965-3971

OWNER:

TOWN OF SUDBURY, MA

278 OLD SUDBURY ROAD
SUDBURY, MA 01776

APPLICANT:

QUARRY NORTH ROAD LLC

2134 SEVILLA WAY
NAPLES, FL 34109

PROJECT:

DEFINITIVE SUBDIVISION PLAN

MAP 15E, PARCEL 3419
48Y FITCHBURG TURNPIKE
CONCORD, MASSACHUSETTS

SCALE:

40 0 20 40 80

GRAPHIC SCALE IN FEET

SHEET:

PLAN & PROFILE

9

DATE: 09/08/2020

GENERAL

THIS PLAN PROPOSES EROSION CONTROL MEASURES TO ADEQUATELY CONTROL ACCELERATED SEDIMENTATION AND REDUCE THE DANGER FROM STORM WATER RUNOFF AT THE SITE. THE RUNOFF SHALL BE CONTROLLED BY THE INTERCEPTION, DIVERSION, AND SAFE DISPOSAL OF PRECIPITATION. RUNOFF SHALL ALSO BE CONTROLLED BY STAGING CONSTRUCTION ACTIVITY AND PRESERVING NATURAL VEGETATION WHEREVER POSSIBLE.

EXISTING VEGETATION SHALL BE PROTECTED AND ONLY THAT CLEARING AND GRUBBING ABSOLUTELY NECESSARY TO THE PROPOSED CONSTRUCTION SHALL BE PERFORMED. ALL DISTURBED AREAS SHALL BE RESTORED TO THEIR ORIGINAL CONDITION AND CONTOUR, UNLESS OTHERWISE INDICATED ON THE PLANS. THE CONTRACTOR SHALL TAKE SPECIAL CARE WITH HIS CONSTRUCTION METHODS AND SHALL COMPLY WITH THE FOLLOWING GUIDELINES.

SEDIMENTATION CONTROL

ALL AREAS SHALL BE PROTECTED FORM SEDIMENTATION DURING AND AFTER CONSTRUCTION, PARTICULARLY THE STORAGE OF EXCAVATED OR STOCKPILED MATERIAL. THE CONTRACTOR SHALL CAREFULLY STRIP ALL TOPSOIL, LOAM, OR ORGANIC MATTER PRIOR TO THE TRENCHING OR OTHER OPERATIONS AND SHALL STORE THEM SEPARATELY FROM ALL OTHER MATERIALS DURING EXCAVATION. EACH STOCKPILE MUST BE ADEQUATELY RINGED WITH SEDIMENT CONTROL MATERIAL (i.e. HAY BALES AND/OR FILTER FIBER ROLL).

DEBRIS AND OTHER WASTE RESULTING FROM EQUIPMENT MAINTENANCE AND CONSTRUCTION WILL NOT BE DISCARDED ON SITE.

EROSION AND SEDIMENTATION CONTROL PLAN

SEDIMENTATION CONTROL SYSTEM – THE SEDIMENTATION CONTROL SYSTEM SHALL CONSIST OF FILTER FABRIC BARRIER FENCE & HAYBALES. THE SEDIMENTATION CONTROL SYSTEM SHALL BE INSTALLED IMMEDIATELY AFTER A CUT SLOPE HAS BEEN GRADED, BEFORE A FILL SLOPE HAS BEEN CREATED AND AS INDICATED ON THE PLANS. THE SYSTEM DESIGNED TO INTERCEPT SILT AND SEDIMENT BEFORE IT REACHES THE WETLANDS OR WATERCOURSES. DEPOSITS OF SEDIMENT AND SILT ARE TO BE PERIODICALLY REMOVED FOR THE UPSTREAM SIDE OF THE FENCE. THIS MATERIAL IS TO BE SPREAD AND STABILIZED IN AREAS NOT SUBJECT TO EROSION, OR IN AREAS WHICH ARE NOT TO BE PAVED OR BUILT ON. THE SEDIMENTATION CONTROL SYSTEM IS TO BE REPLACED AS NECESSARY TO PROVIDE PROPER FILTERING ACTION. THE SYSTEM IS TO REMAIN IN PLACE AND BE MAINTAINED TO INSURE EFFICIENT SILTATION CONTROL UNTIL ALL AREAS ABOVE THE SYSTEM ARE STABILIZED AND VEGETATION HAS BEEN ESTABLISHED.

STACKED HAY BALES – HAY OR STRAW BALES USED FOR EROSION CONTROL SHALL BE STACKED AT CATCH BASINS WHERE SEDIMENT MAY ENTER THE CATCH BASIN OR AS DIRECTED BY THE RESIDENT ENGINEER. DEPOSITS OF SEDIMENT AND SILT ARE TO BE PERIODICALLY REMOVED FROM THE UPSTREAM SIDE OF THE EROSION CHECKS. THIS MATERIAL IS TO BE SPREAD AND STABILIZED IN AREAS NOT SUBJECT TO EROSION, OR IN AREAS WHICH ARE NOT TO BE PAVED OR BUILT ON. HAY OR STRAW BALES ARE TO BE REPLACED AS NECESSARY TO PROVIDE PROPER FILTERING ACTION. THE SYSTEM IS TO REMAIN IN PLACE AND BE MAINTAINED TO INSURE EFFICIENT SILTATION CONTROL UNTIL ALL AREAS ABOVE THE EROSION CHECKS ARE STABILIZED AND VEGETATION HAS BEEN ESTABLISHED.

EROSION CONTROL MATTING – MATTING SHALL BE USED FOR EROSION CONTROL ON SLOPES GREATER THAN 3:1. SOIL ON SLOPES SHALL BE PREPARED BEFORE INSTALLING MATTING, INCLUDING ANY NECESSARY APPLICATION OF LIME, FERTILIZER AND SEED. THE SYSTEM IS TO REMAIN IN PLACE AND BE MAINTAINED TO INSURE EFFICIENT EROSION CONTROL UNTIL VEGETATION HAS ESTABLISHED.

IN ALL AREAS, REMOVAL OF TREES, BUSHES, AND OTHER VEGETATION, AND DISTURBANCE TO THE SOIL, IS TO BE KEPT TO AN ABSOLUTE MINIMUM WHILE ALLOWING PROPER DEVELOPMENT OF THE SITE.

TOWN OF CONCORD–PUBLIC WORKS DESIGN AND CONSTRUCTION STANDARDS		
EROSION AND SEDIMENTATION CONTROL NOTES		
SCALE:N.T.S.	DATE:01/08/2015	
JOB NO.\FILE NAME: FILE.DWG	DESIGNED BY: JCZ DRAWN BY: JCZ CHECKED BY: W.J.R.	PLAN NO. EC–1

EROSION AND SEDIMENT CONTROL NOTES DETAIL

NOT TO SCALE

EROSION AND SEDIMENT CONTROL MAINTENANCE PROCEDURES

DURING CONSTRUCTION, AS SMALL AN AREA OF SOIL AS POSSIBLE SHOULD BE EXPOSED OR AS SHORT A TIME AS POSSIBLE. AFTER CONSTRUCTION, GRADE, RESPREAD TOPSOIL, AND STABILIZE SOIL BY SEEDING AND MULCHING AS TO PREVENT EROSION.

ALL SEDIMENTATION AND EROSION CONTROL DEVICES SHALL BE INSPECTED DURING CONSTRUCTION ON A DAILY BASIS AND FOLLOWING ALL STORMS BY THE RESIDENT ENGINEER. THE CONTRACTOR SHALL MAINTAIN AND MAKE REPAIRS AND REMOVE SEDIMENT AS REQUESTED BY THE RESIDENT ENGINEER. THIS WORK SHALL BE PERFORMED WITHIN 24 HOURS OF REQUEST.

THE CONTRACTOR SHALL CLEAN SEDIMENT AND DEBRIS FROM ALL DRAINAGE STRUCTURES, AND PIPES AT THE COMPLETION ON CONSTRUCTION. THE CONTRACTOR SHALL REPAIR ALL ERODED AREAS AND ENSURE A GOOD STAND OF TURF IS ESTABLISHED THROUGHOUT. THE CONTRACTOR SHALL REPAIR ALL ERODED OR DISPLACED RIPRAP, AND CLEAN SEDIMENT COVERED STONES.

CONSTRUCTION PROCEDURES:

1. HAY BALES SHALL BE PLACED AROUND EXISTING CATCH BASINS AND DROP INLETS TO PREVENT SEDIMENTATION AND OTHER DEBRIS FROM ACCUMULATING ON THE GRATE OR IN THE SUMP. HAY BALES SHOULD BE KEPT CLEAN AND FREE OF DEBRIS TO FACILITATE FLOW.

2. EACH BALE SHALL BE EMBEDDED IN THE SOIL A MINIMUM OF 4 INCHES, AND PLACED SO THE BINDINGS ARE HORIZONTAL.

3. BALES SHALL BE SECURELY ANCHORED IN PLACE BY EITHER TWO STAKES OR OR REBARS DRIVEN THROUGH THE BALE. THE FIRST STAKE SHALL BE DRIVEN TOWARD THE PREVIOUSLY LAID BALE AT AN ANGLE TO FORCE THE BALES TOGETHER. STAKES SHALL BE DRIVEN FLUSH WITH THE BALE.

4. INSPECTION SHALL BE FREQUENT AND REPAIR REPLACEMENT SHALL BE MADE PROMPTLY AS NEEDED.

5. BALES SHALL BE REMOVED WHEN THEY HAVE SERVED THEIR USEFULNESS SO AS NOT TO BLOCK OR IMPEDE STORM FLOW OR DRAINAGE.

TOWN OF CONCORD–PUBLIC WORKS DESIGN AND CONSTRUCTION STANDARDS		
EROSION AND SEDIMENTATION CONTROL NOTES (CONTINUED)		
SCALE:N.T.S.	DATE:01/08/2015	
JOB NO.\FILE NAME: FILE.DWG	DESIGNED BY: JCZ DRAWN BY: JCZ CHECKED BY: W.J.R.	PLAN NO. EC–2

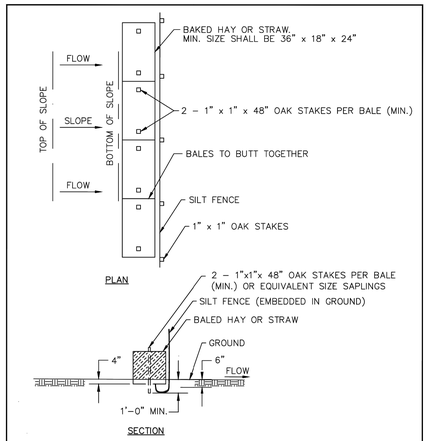

TOWN OF CONCORD–PUBLIC WORKS DESIGN AND CONSTRUCTION STANDARDS		
HAYBALES AND SILT FENCE		
SCALE:N.T.S.	DATE:01/08/2015	
JOB NO.\FILE NAME: FILE.DWG	DESIGNED BY: JCZ DRAWN BY: JCZ CHECKED BY: W.J.R.	PLAN NO. EC–4

TYPICAL HAYBALE & SILT FENCE DETAIL

NOT TO SCALE

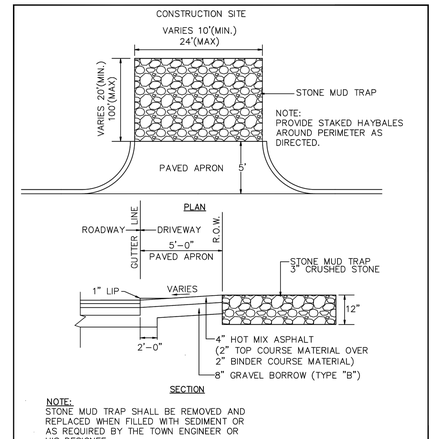

NOTE:
STONE MUD TRAP SHALL BE REMOVED AND REPLACED WHEN FILLED WITH SEDIMENT OR AS REQUIRED BY THE TOWN ENGINEER OR HIS DESIGNEE.

TOWN OF CONCORD–PUBLIC WORKS DESIGN AND CONSTRUCTION STANDARDS		
TEMPORARY CONSTRUCTION ENTRANCE		
SCALE:N.T.S.	DATE:01/08/2015	
JOB NO.\FILE NAME: FILE.DWG	DESIGNED BY: JCZ DRAWN BY: JCZ CHECKED BY: W.J.R.	PLAN NO. EC–7

TYPICAL CONSTRUCTION ENTRANCE DETAIL

NOT TO SCALE

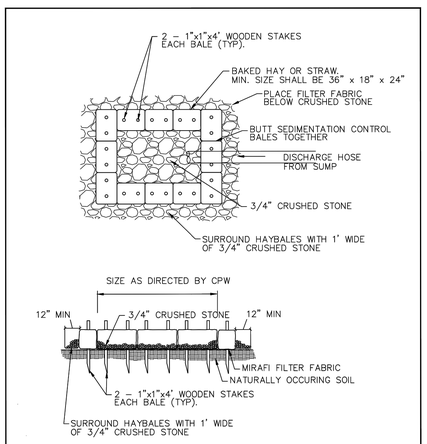

TOWN OF CONCORD–PUBLIC WORKS DESIGN AND CONSTRUCTION STANDARDS		
ONSITE DEWATERING BASIN		
SCALE:N.T.S.	DATE:01/08/2015	
JOB NO.\FILE NAME: FILE.DWG	DESIGNED BY: JCZ DRAWN BY: JCZ CHECKED BY: W.J.R.	PLAN NO. EC–5

TYPICAL DEWATERING BASIN DETAIL

NOT TO SCALE

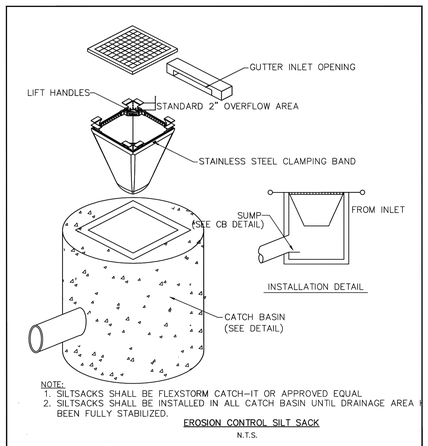

NOTE:
1. SILTSACKS SHALL BE FLEXSTORM CATCH–IT OR APPROVED EQUAL
2. SILTSACKS SHALL BE INSTALLED IN ALL CATCH BASIN UNTIL DRAINAGE AREA I BEEN FULLY STABILIZED.

EROSION CONTROL SILT SACK

N.T.S.

TOWN OF CONCORD–PUBLIC WORKS DESIGN AND CONSTRUCTION STANDARDS		
EROSION CONTROL SILT SACK DETAIL		
SCALE:N.T.S.	DATE:08/10/2017	
JOB NO.\FILE NAME: FILE.DWG	DESIGNED BY: JCZ DRAWN BY: JCZ CHECKED BY: W.J.R.	PLAN NO. EC–11

TYPICAL SILT SACK DETAIL

NOT TO SCALE

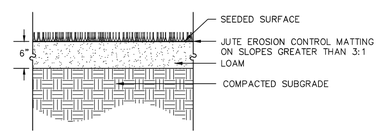

TOWN OF CONCORD–PUBLIC WORKS DESIGN AND CONSTRUCTION STANDARDS		
LOAM AND SEED DETAIL		
SCALE:N.T.S.	DATE:01/08/2015	
JOB NO.\FILE NAME: FILE.DWG	DESIGNED BY: JCZ DRAWN BY: JCZ CHECKED BY: W.J.R.	PLAN NO. EC–13

TYPICAL LOAM & SEED DETAIL

NOT TO SCALE

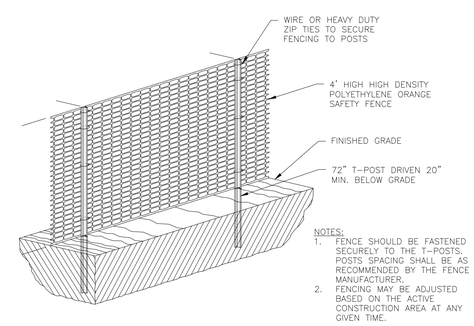

NOTES:
1. FENCE SHOULD BE FASTENED SECURELY TO THE T–POSTS. POSTS SPACING SHALL BE AS RECOMMENDED BY THE FENCE MANUFACTURER.
2. FENCING MAY BE ADJUSTED BASED ON THE ACTIVE CONSTRUCTION AREA AT ANY GIVEN TIME.

TEMPORARY CONSTRUCTION DELINEATION FENCING DETAIL

NOT TO SCALE

NOT FOR CONSTRUCTION

CDG PROJECT #: 20022

REVISIONS:

REV	DATE	COMMENT
1		
2		
3		
4		
5		
6		
7		
8		
9		
10		

PLANNING BOARD:

SEAL:

COMMONWEALTH OF MASSACHUSETTS
MATTHEW A. LEIDNER
CIVIL
No. 45641
REGISTERED PROFESSIONAL ENGINEER

MATTHEW A. LEIDNER, P.E.

PREPARED BY:

CIVIL DESIGN GROUP, LLC

21 HIGH STREET, SUITE 207
NORTH ANDOVER, MA 01845
www.cdgengineering.com
p: 978-794-5400 f: 978-965-3971

OWNER:

TOWN OF SUDBURY, MA

278 OLD SUDBURY ROAD
SUDBURY, MA 01776

APPLICANT:

QUARRY NORTH ROAD LLC

2134 SEVILLA WAY
NAPLES, FL 34109

PROJECT:

DEFINITIVE SUBDIVISION PLAN

MAP 15E, PARCEL 3419
48Y FITCHBURG TURNPIKE
CONCORD, MASSACHUSETTS

SCALE:

AS-NOTED

SHEET:

CONSTRUCTION DETAILS

10

DATE: 09/08/2020

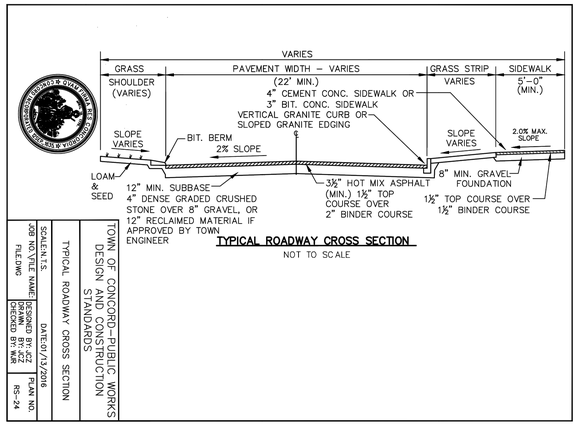

TYPICAL ROADWAY SECTION DETAIL

NOT TO SCALE

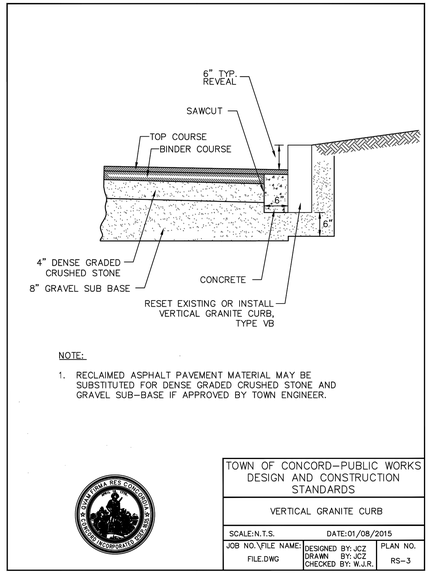

TYPICAL VERTICAL GRANITE CURB DETAIL

NOT TO SCALE

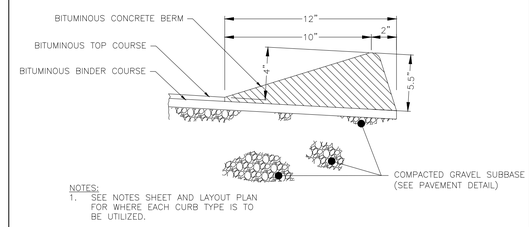

TYPICAL MONOLITHIC CAPE COD BERM DETAIL

NOT TO SCALE

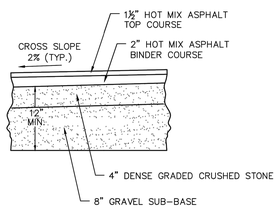

TYPICAL PAVEMENT SECTION DETAIL

NOT TO SCALE

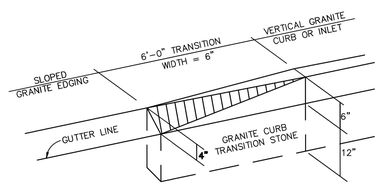

TYPICAL CURB TRANSITION DETAIL

NOT TO SCALE

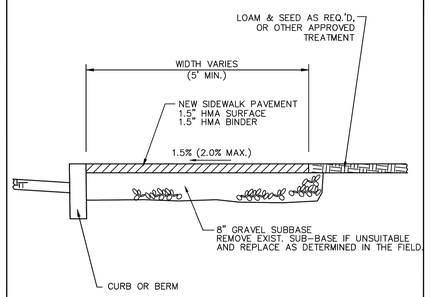

TYPICAL ASPHALT SIDEWALK DETAIL

NOT TO SCALE

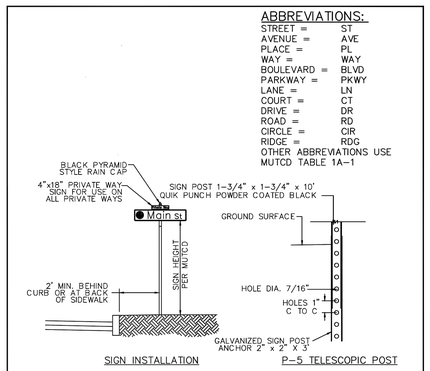

TYPICAL STREET NAME SIGN DETAIL

NOT TO SCALE

NOT FOR CONSTRUCTION

CDG PROJECT #: 20022

REVISIONS:

REV	DATE	COMMENT
1		
2		
3		
4		
5		
6		
7		
8		
9		
10		

PLANNING BOARD:

SEAL:

COMMONWEALTH OF MASSACHUSETTS
MATTHEW A. LEIDNER
CIVIL
No. 45641
REGISTERED PROFESSIONAL ENGINEER

MATTHEW A. LEIDNER, P.E.

PREPARED BY:

CIVIL DESIGN GROUP, LLC

21 HIGH STREET, SUITE 207
NORTH ANDOVER, MA 01845
www.cdgengineering.com
p: 978-794-5400 f: 978-965-3971

OWNER:

TOWN OF SUDBURY, MA

278 OLD SUDBURY ROAD
SUDBURY, MA 01776

APPLICANT:

QUARRY NORTH ROAD LLC

2134 SEVILLA WAY
NAPLES, FL 34109

PROJECT:

DEFINITIVE SUBDIVISION PLAN

MAP 15E, PARCEL 3419
48Y FITCHBURG TURNPIKE
CONCORD, MASSACHUSETTS

SCALE:

AS-NOTED

SHEET:

CONSTRUCTION DETAILS

11

DATE: 09/08/2020

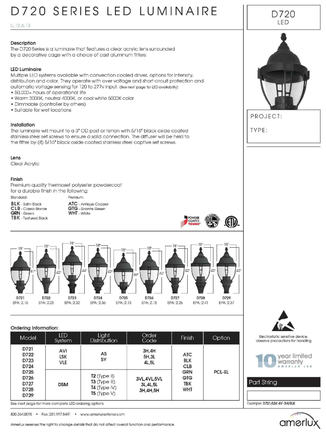

STREET LIGHT SCHEDULE							CALCULATION SUMMARY							
	SYMBOL	QTY	LABEL	ARRANGEMENT	LUMINAIRE LUMENS	LLF	LABEL	CALCTYPE	UNITS	AVG	MAX	MIN	AVG/MIN	MAX/MIN
LUMINAIRE		2	D72x/CA/AVI-SY-4L	SINGLE	3473	0.900	CALCPTS	ILLUMINANCE	Fc	1.11	5.8	0.0	N.A.	N.A.

NOTES:

1. UNLESS OTHERWISE REQUIRED BY THE TOWN, STREET LIGHTS SHALL BE AMERLUX MODEL D721, SMOOTH SATIN BLACK, WITH LED LIGHT SOURCE AND OPTIONAL DECORATIVE CHIMNEY (OPTION "CHM"). POLES SHALL BE 12' ALUMINUM DIRECT BURY. AMERLUX PART STRING D53-12/FDBE/D721/AVI-AS-(SY)-4L/BLK/PCL OR APPROVED EQUAL. STREET LIGHTS AND MAILBOX LIGHTS SHALL BE ON PHOTOCELL (ACCESSORY "PCL").
2. FINAL STYLE, LOCATIONS, AND QUANTITY OF STREET LIGHTING SHALL BE DETERMINED BY THE SUPERINTENDENT OF THE CONCORD MUNICIPAL LIGHT PLANT.

STREET LIGHT DETAIL

NOT TO SCALE

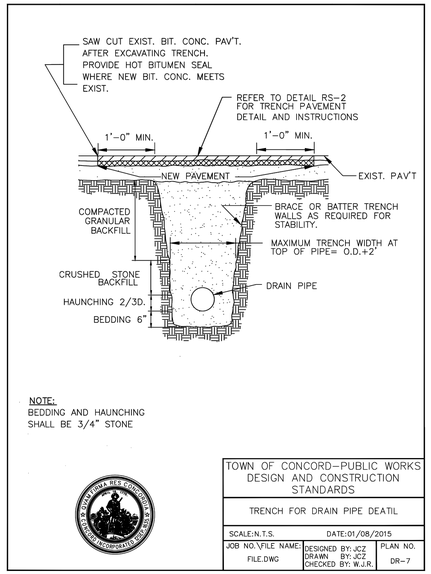

TYPICAL DRAIN PIPE TRENCH DETAIL

NOT TO SCALE

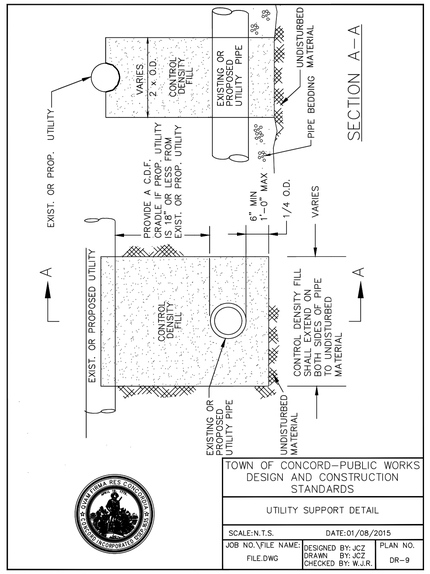

TYPICAL UTILITY SUPPORT DETAIL

NOT TO SCALE

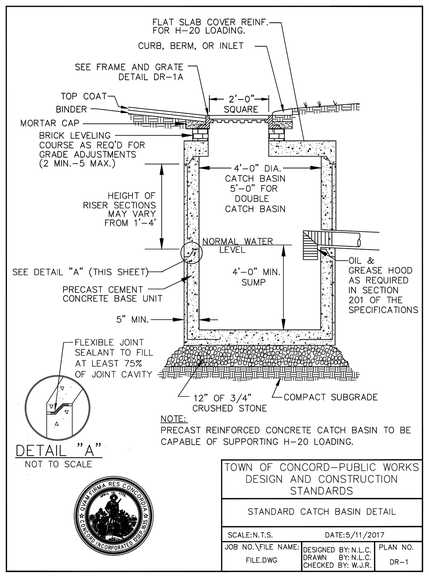

TYPICAL CATCH BASIN DETAIL

NOT TO SCALE

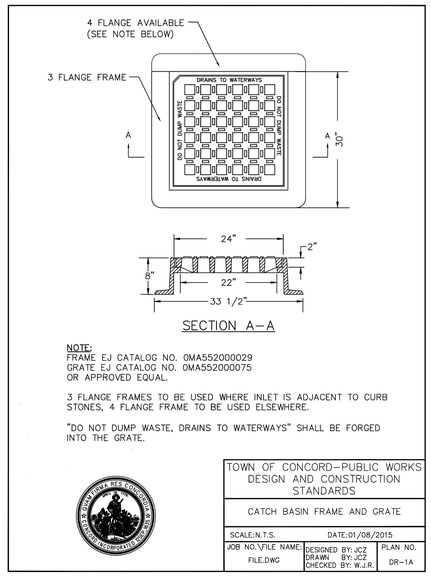

TYPICAL CATCH BASIN GRATE DETAIL

NOT TO SCALE

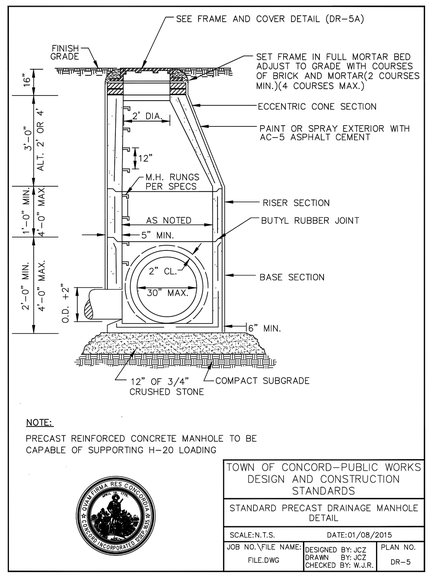

TYPICAL DRAIN MANHOLE DETAIL

NOT TO SCALE

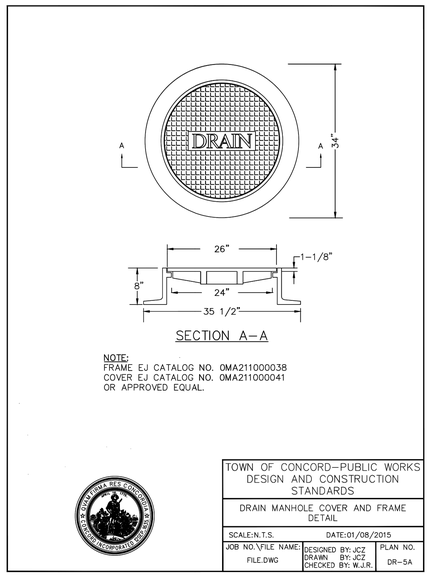

TYPICAL DRAIN MANHOLE GRATE DETAIL

NOT TO SCALE

NOT FOR CONSTRUCTION

CDG PROJECT #: 20022

REVISIONS:

REV	DATE	COMMENT
1		
2		
3		
4		
5		
6		
7		
8		
9		
10		

PLANNING BOARD:

SEAL:

COMMONWEALTH OF MASSACHUSETTS
MATTHEW A. LEIDNER
CIVIL
No. 45641
REGISTERED PROFESSIONAL ENGINEER

MATTHEW A. LEIDNER, P.E.

PREPARED BY:

CIVIL DESIGN GROUP, LLC

21 HIGH STREET, SUITE 207
NORTH ANDOVER, MA 01845
www.cdgengineering.com
p: 978-794-5400 f: 978-965-3971

OWNER:

TOWN OF SUDBURY, MA

278 OLD SUDBURY ROAD
SUDBURY, MA 01776

APPLICANT:

QUARRY NORTH ROAD LLC

2134 SEVILLA WAY
NAPLES, FL 34109

PROJECT:

DEFINITIVE SUBDIVISION PLAN

MAP 15E, PARCEL 3419
48Y FITCHBURG TURNPIKE
CONCORD, MASSACHUSETTS

SCALE:

AS-NOTED

SHEET:

CONSTRUCTION DETAILS

12

DATE: 09/08/2020

WQU STRUCTURE	MODEL
DMH-C3	CONTECH CDS 2015-4
DMH-C4	CONTECH CDS 2015-5

WATER QUALITY UNIT (WQU) SCHEDULE

NOT TO SCALE

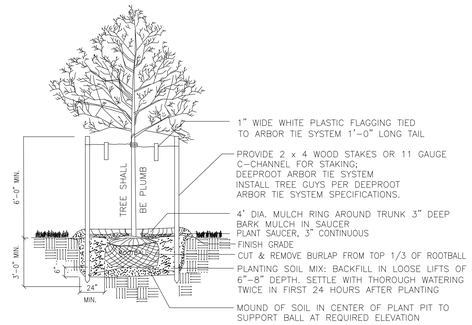

TREE PLANTING DETAIL

NOT TO SCALE

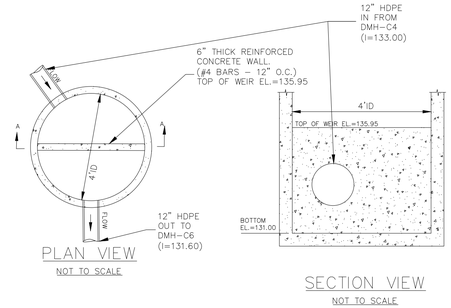

NOTES:

1. OUTLET CONTROL PRECAST STRUCTURE SHALL CONFORM TO THE TYPICAL DRAIN MANHOLE DETAIL.
2. INVERT ELEVATIONS SHALL BE VERIFIED BY THE CONTRACTOR.

DMH-C5 (WEIR) DETAIL

NOT TO SCALE

NOTES:

1. SUBSURFACE INFILTRATION SYSTEM SHALL BE SET LEVEL AND IS COMPRISED OF 34 CONCRETE STRUCTURES AS MANUFACTURED BY RETAIN-IT STORMWATER MANAGEMENT SYSTEMS.
2. THE SYSTEM LAYOUT IS SHOWN ON THE GRADING & DRAINAGE PLAN.
3. THE INNER DIMENSION OF EACH GALLEY IS 7'Wx7'Lx5'H.
4. CONCRETE, 5,000 PSI MINIMUM AFTER 28 DAYS.
5. H-20 DESIGN LOADING FOR AASHTO HS-20-44.
6. SIDE UNITS DO NOT HAVE FLOW THROUGH OPENINGS.

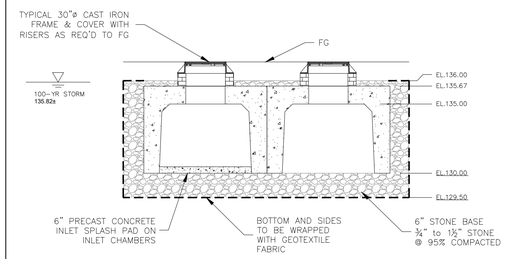

5' HIGH GALLEY
DETAIL SECTION

SUBSURFACE DETENTION SYSTEM (DET-MF-2) DETAIL

NOT TO SCALE

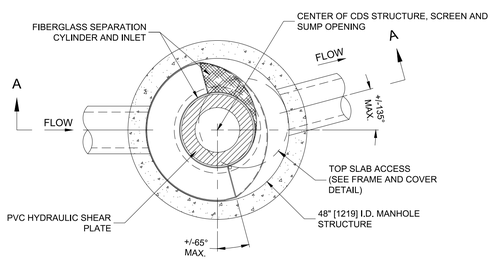

PLAN VIEW B-B
N.T.S.

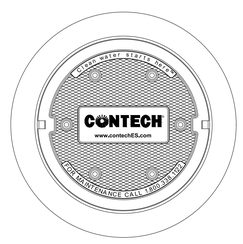

FRAME AND COVER
(DIAMETER VARIES)
N.T.S.

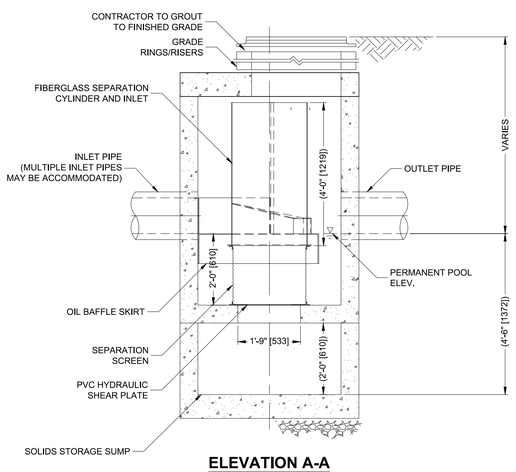

ELEVATION A-A
N.T.S.

CONTECH CDS2015-4 DETAIL

NOT TO SCALE

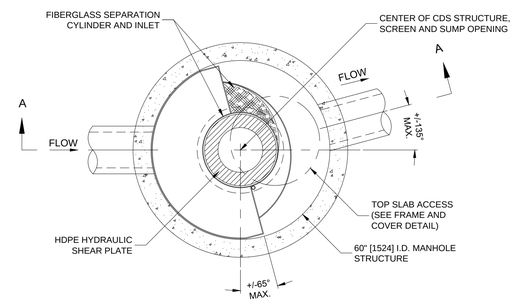

PLAN VIEW B-B
N.T.S.

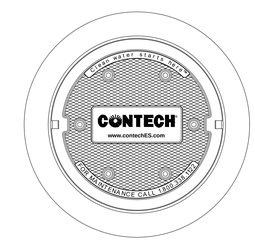

FRAME AND COVER
(DIAMETER VARIES)
N.T.S.

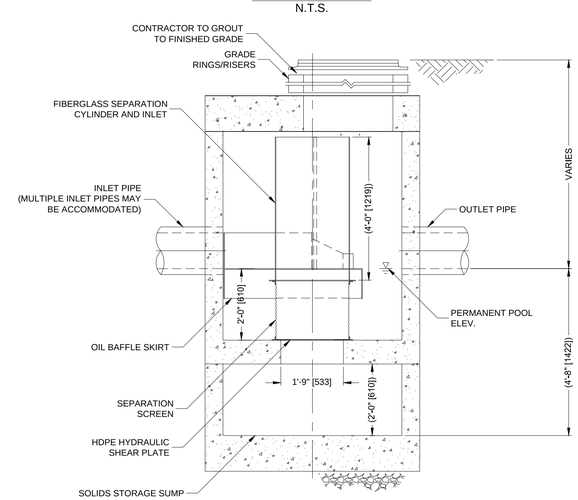

ELEVATION A-A
N.T.S.

CONTECH CDS2015-5 DETAIL

NOT TO SCALE

NOT FOR CONSTRUCTION

CDG PROJECT #: 20022

REVISIONS:

REV	DATE	COMMENT
1		
2		
3		
4		
5		
6		
7		
8		
9		
10		

PLANNING BOARD:

SEAL:

COMMONWEALTH OF MASSACHUSETTS
MATTHEW A. LEIDNER
CIVIL
No. 45641
REGISTERED PROFESSIONAL ENGINEER

MATTHEW A. LEIDNER, P.E.

PREPARED BY:

CIVIL DESIGN GROUP, LLC
21 HIGH STREET, SUITE 207
NORTH ANDOVER, MA 01845
www.cdgengineering.com
p: 978-794-5400 f: 978-965-3971

OWNER:
TOWN OF SUDBURY, MA
278 OLD SUDBURY ROAD
SUDBURY, MA 01776

APPLICANT:
QUARRY NORTH ROAD LLC
2134 SEVILLA WAY
NAPLES, FL 34109

PROJECT:
DEFINITIVE SUBDIVISION PLAN
MAP 15E, PARCEL 3419
48Y FITCHBURG TURNPIKE
CONCORD, MASSACHUSETTS

SCALE:
AS-NOTED

SHEET:
CONSTRUCTION DETAILS
13

DATE: 09/08/2020