Concord Free Public Library Expansion

129 & 151 Main Street
Concord, MA 01742

View from Main Street

View from Garden

JOHNSON ROBERTS ASSOCIATES INC. ARCHITECTS

Johnson Roberts Associates Inc.
Architects
15 Properzi Way
Somerville, Massachusetts 02143

t: 617 666-8585
mbellefeuille@johnson-roberts.com
www.johnson-roberts.com

Structural

Roome & Guarracino, LLC
48 Grove Street
Somerville, Massachusetts 02144
t: 617 628-1700

Civil, Fire Protection, Plumbing, Mechanical, Electrical & Technology

Garcia•Galuska•DeSousa
370 Faunce Corner Road
Dartmouth, Massachusetts 02747
t: 508 998-5700

Landscape

Kim Ahern
40 Foster Street
Littleton, Massachusetts 01460
t: (978) 486-0040

Geotechnical

O'Reilly, Talbot & Okun
293 Bridge Street, Suite 500
Springfield, Massachusetts 01103
t: (413) 788-6222

Hazardous Materials

Universal Environmental Consultants
12 Brewster Road
Framingham, Massachusetts 01702
t: (508) 628-5486

Door Hardware

De La Fontaine
23 Draper Street
Woburn, Massachusetts 01801
t: (781) 254-2707

Energy Audit

New Ecology, Inc.
15 Court Square, Suite 420
Boston, Massachusetts 02108
t: (617) 557-1700

List of Drawings

G 1.1	TITLE PAGE
G 1.2	SYMBOLS AND ABBREVIATIONS
C0.1	SITE LEGEND, NOTES & DETAILS
C0.2	SITE DETAILS
C0.3	SITE DETAILS
C1.0	SITE DEMOLITION & PREPARATION PLAN
C1.1	SITE LAYOUT PLAN
C2.1	SITE UTILITY & GRADING PLAN
L1.0	LANDSCAPE PLAN
D2.1	BASEMENT DEMOLITION PLAN
D2.2	GROUND FLOOR DEMOLITION PLAN
D2.3	SECOND FLOOR DEMOLITION PLAN
A1.1	CODE PLAN
A1.2	WALL TYPES
A2.0	BENCHMARK LOCATOR PLAN
A2.1	BASEMENT PLAN
A2.2	GROUND FLOOR PLAN
A2.3	SECOND FLOOR / CLERESTORY PLAN
A2.4	THIRD FLOOR / ROOF PLAN & SCHEDULE
A3.1	ELEVATIONS
A4.1	BUILDING SECTIONS
A4.2	WALL SECTIONS
A4.3	WALL SECTIONS
A4.4	WALL SECTIONS
A4.5	DETAILS
A4.6	DETAILS
A4.7	DETAILS
A4.8	DETAILS
A4.10	PLAN DETAILS
A4.11	PLAN DETAILS
A5.1	BASEMENT RCP
A5.2	GROUND FLOOR RCP
A5.3	SECOND FLOOR RCP
A7.1	TOILET ROOMS
A7.2	ELEVATOR PLANS, SECTIONS, & DETAILS
A7.4	EXT. STAIR, FENCE, & MISC. DETAILS
A8.1	SCHEDULES, DOOR TYPES & DETAILS
A8.2	WINDOW SCHEDULE & DETAILS
S1.1	GENERAL NOTES
S1.2	TYPICAL DETAILS
S1.3	TYPICAL DETAILS
S2.1	FOUNDATION PLAN
S2.2	GROUND FLOOR FRAMING PLAN
S2.3	SECOND STORY / CLERESTORY FRAMING PLAN
S2.4	THIRD FLOOR / ROOF FRAMING PLAN
S3.1	SECTIONS
S3.1A	SECTIONS
S3.2	SECTIONS
FP5.0	LEGEND, SCHEDULES, AND DETAILS
FP5.1	BASEMENT FIRE PROTECTION PLAN
FP5.2	GROUND FLOOR FIRE PROTECTION PLAN
FP5.3	SECOND FLOOR FIRE PROTECTION PLAN
PD2.1	BASEMENT DEMOLITION PLUMBING PLAN
PD2.2	GROUND FLOOR DEMOLITION PLUMBING PLAN
PD2.3	SECOND FLOOR DEMOLITION PLUMBING PLAN
P2.0	PLUMBING LEGEND, SCHEDULES, AND DETAILS PLAN
P2.1	BASEMENT PLUMBING PLAN
P2.2	GROUND FLOOR PLUMBING PLAN
P2.3	SECOND FLOOR PLUMBING PLAN
P2.4	ROOF PLUMBING PLAN
MD.1	BASEMENT DEMO PLAN - HVAC
MD.2	GROUND FLOOR DEMO PLAN - HVAC
MD.3	SECOND FLOOR DEMO PLAN - HVAC
M1.1	BASEMENT DUCTWORK PLAN - HVAC
M1.2	GROUND FLOOR DUCTWORK PLAN - HVAC
M1.3	SECOND FLOOR DUCTWORK PLAN - HVAC
M1.4	ATTIC PART PLANS – HVAC
M2.1	BASEMENT PIPING PLAN - HVAC
M2.2	GROUND FLOOR PIPING PLAN - HVAC
M2.3	SECOND FLOOR PIPING PLAN - HVAC
M3.0	SCHEDULES
M3.1	CONTROLS 1 - HVAC
M3.2	DETAILS – HVAC
E0.1	ELECTRICAL SYMBOLS LIST
E0.2	LIGHTING FIXTURE SCHEDULE
E0.3	ELECTRICAL SITE PLAN
E1.1	BASEMENT FLOOR PLAN – LIGHTING
E1.2	GROUND FLOOR PLAN – LIGHTING
E1.3	SECOND FLOOR PLAN – LIGHTING
E2.1	BASEMENT FLOOR PLAN – POWER
E2.2	GROUND FLOOR PLAN – POWER
E2.3	SECOND FLOOR PLAN – POWER
E3.0	ONE LINE DIAGRAM
E3.1	PANEL SCHEDULE AND DETAILS
E3.2	MECHANICAL SCHEUDLE AND DETAILS
E3.3	ELECTRICAL DETAILS
E4.0	FIRE ALARM RISER
E4.1	BASEMENT FLOOR PLAN – FIRE ALARM
E4.2	GROUND FLOOR PLAN – FIRE ALARM
E4.3	SECOND FLOOR PLAN – FIRE ALARM
T0.1	TECHNOLOGY SYMBOLS LIST
T1.1	BASEMENT FLOOR PLAN – TECHNOLOGY
T1.2	GROUND FLOOR PLAN – TECHNOLOGY
T1.3	SECOND FLOOR PLAN – TECHNOLOGY
T2.0	TECHNOLOGY RISER DIAGRAM
T3.0	TECHNOLOGY DETAILS

Permit Set

October 24, 2019

G1.1

SYMBOLS USED ON DRAWINGS

Center Line, Exterior Elevation Lines, Section Lines

Property Line, Boundary Line

Hidden, Future, Existing to be Removed

Contract Limit Line

Area Not in Contract

Break Lines

Dimension Lines

18'-6"

8'-6"

Indication Arrows

NOTE

NOTE

Stair/Ramp Directional Arrows

UP 14 R

Slope Arrows
Always Face Downslope

NOTES

KEYNOTE

CSI FORMAT NO.

NOTE NO.

05500.02

WRITTEN NOTE

NOTE:

BOX IMPORTANT NOTES

SITE

Project North Arrow

PROJECT NORTH

MAGNETIC NORTH (SITE PLAN ONLY)

Point Elevation in Plan
New or Required

+ 451.0'

Point Elevation in Plan
Existing

+ 451.0'

Existing Topographic Contour Line
Elevation Noted on High Side

215

New Topographic Contour Line
Elevation Noted on High Side

215

Test Boring Site and Number

TB-2

Element Elevation

138.7

5'

TOW

ARCHITECTURAL

Room Name and Number

ROOM NAME

000

Door Number

A101

Trim Type

B

Frame Type

2

Interior Window Type

5

Exterior Window Type

10

Window Treatment Type

IV

Louver Type

L7

Precast Type

7

Glass Type

5

Partition Type

4A

Partition Type
with Acousitcal Insulation

4A

Column Lines
Numbers for Horizontal String
Letters for Vertical String

A

1

Firestopping

Fire Extinguisher

1 FLOOR PLAN
Scale: 1/8" = 1'-0"

Plan, Elevation, Section or Detail
Identification Number

Building Section

3 A4.1

3 A4.1

Wall Section

1 A4.1

Detail Reference

2 A4.1

2 A4.1

Interior Elevation Reference
Interior Elevations are grouped by room

3 A6.3

Exterior Elevation Reference

4 A3.1

Building Elevation Mark
Existing Construction
VERIFY IN FIELD

GROUND FLOOR
Elev. 120.50'

Building Elevation Mark
New Construction

GROUND FLOOR
Elev. 120.50'

New Construction
In Plan or Section

Demolition
In Plan or Section

MATERIALS

EARTHWORK

Soil

New Grade Fill

Crushed Stone/ Gravel

CONCRETE

Cast In Place

Steel Reiforced Concrete

Sand

MASONRY

Concrete Block

Common Face

Modular Cast Stone

Precast Concrete

Brick Siding

WOOD

Rough

Blocking

Plywood Sheathing

Trim Piece

METAL

Steel

Aluminum

Bronze/Brass

FINISHES

Board and Batton Siding

Cedar Shingles Siding

Clad Board Siding

Acoustical Tile

Carpet

Ceramic Tile

Metal Lath & Plaster

Gypsum Wallboard

Flooring Mat

Plastic Laminate

Asphalt Roof Shingles

GLASS

Glass

INSULATION

Batt/Loose Fill/ Mineral Wool

Rigid

Spray Foam

ROOFING, FLASHING & UNDERLAYMENTS

Metal Flashing

Air and Vapor Barrier (AVB)
/ Building Felt / Building Wrap

ABBREVIATIONS

A	
℄	CENTERLINE
∠	ANGLE
Ø	DIAMETER
#	POUND
@	AT/AT THE RATE OF
AB	ANCHOR BOLT
ABV	ABOVE
A/C	AIR CONDITIONING
ACC	ACCESS
ACOUS	ACOUSTICAL
ACT	ACOUSTIC CEILING TILE
ACP	ACOUSTIC CEILING PANEL
AD	AREA DRAIN
ADD	ADDENDUM
ADJ	ADJUSTABLE/ADJACENT
AFF	ABOVE FINISH FLOOR
ALT	ALTERNATE
AHU	AIR HANDLING UNIT
ALUM	ALUMINUM
ANC	ANCHOR/ANCHORAGE
APX	APPROXIMATE
ARCH	ARCHITECT/ARCHITECTURAL
ASMB	ASSEMBLY
AUTO	AUTOMATIC
BD	BOARD
BEL	BELOW
BTWN	BETWEEN
BIT	BITUMINOUS
BIT CONC	BITUMINOUS CONCRETE
BLDG	BUILDING
BLKG	BLOCKING
BM	BENCH MARK
BO	BOTTOM OF
BPL	BEARING PLATE
BTM	BOTTOM
BSMT	BASEMENT
BUR	BUILT-UP ROOFING
BVL	BEVELED
C	COURSES
CAB	CABINET
CAP	CAPACITY
CB	CATCH BASIN/CHALK BOARD
CC	CLOSED CIRCUIT
CEM	CEMENT
CFT	CUBIC FEET
CJ	CONTROL JOINT
CKG	CAULKING
CL	CLOSET
CLL	CONTRACT LIMIT LINE
CLG	CEILING
CLR	CLEAR/CLEARANCE
CMU	CONCRETE MASONRY UNIT
CO	CLEAN OUT
COL(S)	COLUMN(S)
COMP	COMPRESS/COMPOSITE
CONC	CONCRETE
CONST	CONSTRUCTION
CONT	CONTINUOUS
CORR	CORRIDOR
CPT	CARPET
CSMT	CASEMENT
CT	CERAMIC TILE
CTSK	COUNTERSINK
CUH	CABINET UNIT HEATER
CYD	CUBIC YARD
D	DRAIN
DBL	DOUBLE
DEMO	DEMOLITION
DF	DRINKING FOUNTAIN
DH	DOUBLE HUNG
DIA	DIAMETER
DIAG	DIAGONAL
DIM	DIMENSION
DISP	DISPENSER
DIV	DIVISION
DN	DOWN
DP	DEEP/DAMPPROOFING
DR	DOOR
DWG	DRAWING
DRW	DRAWER
DS	DOWNSPOUT
DTL	DETAIL
DTP	DIAMOND TREAD PLATE
E	EAST
EA	EACH
EHD	ELECTRIC HAND DRYER
EL	ELEVATION
ELASTO	ELASTOMERIC
ELEC	ELECTRICAL
EMER	EMERGENCY
ENCL	ENCLOSURE/ENCLOSED
EQ	EQUAL
EQPT	EQUIPMENT
EX.(IST)	EXISTING
EXP	EXPOSED/EXPANSION
EXT	EXTERIOR
FA	FIRE ALARM
FAS	FASTEN/FASTENER
FB	FACE BRICK
FD	FLOOR DRAIN
FDN	FOUNDATION
FE	IRE EXTINGUISHER
FEC	FIRE EXTINGUISHER CABINET
FF	FINISH FLOOR
FG	FIBER GLASS
FHC	FIRE HOSE CABINET
FIN	FINISH
FIXT	FIXTURE
FLG	FLASHING
FLM	FLOOR MAT
FLR (G)	FLOOR (FLOORING)
FOB	FACE OF BRICK
FOC	FACE OF CONCRETE
FOF	FACE OF FINISH
FOS	FACE OF STUD
FP	FIRE PROTECTION
FR	FROM
FRT	FIRE-RETARDANT-TREATED
FT (')	FOOT/FEET/FIRE TREATED
FTG	FOOTING
FURR	FURRING
FVC	FIRE VALVE CABINET
GA	GAUGE
GAL(S)	GALLON(S)
GALV	GALVANIZED
GB	GRAB BAR
GC	GENERAL CONTRACTOR
GL	GLASS
GND	GROUND
GT	GROUT
GR	GRADE
GRG	GLASS REINFORCED GYPSUM
GVC	GAS VALVE CABINET
GWB	GYPSUM WALL BOARD
GYP	GYPSUM
H	HIGH
HB	HOSE BIBB
HC	HOLLOW CORE/HANDICAPPED
HDW	HARDWARE
HDR	HEADER
HGT	HEIGHT
HH	HAND HOLE
HM	HOLLOW METAL
HORZ	HORIZONTAL
HP	HIGH POINT
HTG	HEATING
HTR	HEATER
HVAC	HEATING, VENTILATING & AIR CONDITIONING
HWD	HARDWOOD
HWH	HOT WATER HEATER
IN (")	INCHES
INCL	INCLUDE/INCLUDING
INS	INSULATE/INSULATION
INT	INTERIOR
INV	INVERT
J	JOIST
JAN	JANITOR
JC	JANITOR'S CLOSET
JT	JOINT
KIT	KITCHEN
KO	KNOCKOUT
KPL	KICKPLATE
L	LOW
LAB	LABORATORY
LAM	LAMINATE
LAV	LAVATORY
LBL	LABEL
LF	LINEAR FOOT (FEET)
LH	LEFT HAND
LOC	LOCATION
LP	LOW POINT
LT	LIGHT
LTL	LINTEL
LINO	LINOLEUM
MACH	MACHINE
MAS	MASONRY
MATL	MATERIAL
MAX	MAXIMUM
MB	MARKERBOARD
MBR	MEMBER
MDO	MEDIUM DENSITY OVERLAY
MECH	MECHANICAL
MED	MEDIUM
MEMB	MEMBRANE
MEP	MECHANICAL, ELECTRICAL, PLUMBING
MFR	MANUFACTURER
MH	MANHOLE
MIN	MINIMUM
MIR	MIRROR
MISC	MISCELLANEOUS
MLD	MOLDING
MO	MASONRY OPENING
MR	MOISTURE RESISTANT
MRB	MOISTURE RESISTANT BOARD
MTD	MOUNTED
MTL	METAL
N	NORTH
NAT	NATURAL
NIC	NOT IN CONTRACT
NO	NUMBER
NOM	NOMINAL
NTS	NOT TO SCALE
OA	OVERALL
OC	ON CENTER
OD	OPPOSITE HAND
OH	OVERHEAD
OPG	OPENING
OPP	OPPOSITE
OPQ	OPAQUE
PAR	PARALLEL
PCF	POUNDS PER CUBIC FOOT
PERC	PERCOLATION
PERF	PERFORATED
PK	PARKING
PL	PLASTIC/PLATE/PROPERTY LINE
PLAM	PLASTIC LAMINATE
PLAS	PLASTER
PLWD	PLYWOOD
PNL	PANEL
PNT	PAINT/PAINTED
POLY	POLYSTYRENE
POLYI	POLYISOCYANURATE
POLYU	POLYURETHANE
PR	PAIR
PRAC	PRACTICE
PSF	POUNDS PER SQUARE FOOT
PSI	POUNDS PER SQUARE INCH
PT	POINT/PRESSURE TREATED
PTD	PAPER TOWEL DISPENSER
PTN	PARTITION
PTR	PAPER TOWEL RECEPTACLE
PVC	POLYVINYL CHLORIDE
QT	QUARRY TILE
R	RISERS
RAD	RADIUS
RB	RUBBER BASE
RCP	REFLECTED CEILING PLAN
RD	ROOF DRAIN
RE	REINFORCED/REINFORCING
REF	REFER/REFER TO
RF	RESILIENT FLOORING
REM	REMOVE
RET	RETURN
REQ	REQUIRED
REV	REVISED/REVISION
RFG	ROOFING
RFM	RECESSED FLOOR MAT
RGTR	REGISTER
RH	RIGHT HAND
RM	ROOM
RO	ROUGH OPENING
RTU	ROOFTOP UNIT
S	SOUTH
SC	SOLID CORE
SCHED	SCHEDULE
SD	STORM DRAIN/SOAP DISPENSER
SECT	SECTION
SF	SQUARE FOOT
SHT	SHEET
SIM	SIMILAR
SMS	SEAMS
SND	SANITARY NAPKIN DISPENSER
SNR	SANITARY NAPKIN RECEPTACLE
SOG	SLAB ON GRADE
SPEC	SPECIFICATION
SPK	SPEAKER
SPR	SPRIINKLER (PIPING/SYSTEM)
SQ	SQUARE
SQ FT	SQUARE FOOT (FEET)
SS	STAINLESS STEEL
STD	STANDARD
STL	STEEL
STN	STAIN
STO/STOR	STORAGE
STR	STRUCTURAL
SUSP	SUSPENDED
SWG	SWING
SYM	SYMMETRICAL
SYS	SYSTEM
T	TREAD
TB	TACKBOARD
T&B	TOP AND BOTTOM
TC	TERRA COTTA
T&G	TONGUE AND GROOVE/TAR AND GRAVEL
TECT	TECTUM PANEL
TEL	TELEPHONE
TEMP	TEMPERED/TEMPORARY
THK	THICK/THICKNESS
TO	TOP OF
TOC	TOP OF CONCRETE
TOP	TOP OF PLATE
TOS	TOP OF STEEL/SLAB
TPD	TOILET PAPER DISPENSER
TV	TELEVISION
TYP	TYPICAL FOR ALL SIMILAR CONDITIONS
TZ	TERRAZZO
TRZ	TERRAZZO
UC	UNDERCUT
UNF	UNFINISHED
UON	UNLESS OTHERWISE NOTED
UR	URINAL
VB	VINYL BASE/VAPOR BARRIER
VCB	VINYL COVE BASE
VCT	VINYL COMPOSITION TILE
VERT	VERTICAL
VEST	VESTIBULE
VIF	VERIFY IN FIELD
VIN	VINYL
VNR	VENEER
VP	VENEER PLASTER
W	WEST
W/	WITH
WB	WOOD BASE
WC	WATER CLOSET
WG	WIRED GLASS
WM	WIRE MESH
W/O	WITHOUT
WIN	WINDOW
WD	WOOD
WP	WEATHERPROOF/WORKING POINT
WWM	WELDED WIRE MESH
YD	YARD

JOHNSON ROBERTS ASSOCIATES INC.
ARCHITECTS
15 PROPERZI WAY
SOMERVILLE, MA
02143-3228

Revisions:

CONCORD FREE PUBLIC LIBRARY EXPANSION

Sheet Title:

SYMBOLS & ABBREVIATIONS

Date: 24-Oct-19 Drawn By: MEB

Scale: NTS Project No.: 1714

G1.2

SITE LEGEND

EXISTING	NEW	DESCRIPTION
D	D	STORM DRAIN
E	E	ELECTRIC (UNDERGROUND)
RD	RD	ROOF DRAIN
DS	DS	DOWNSPOUT DRAIN
G	G	GAS
OHW	OHW	OVERHEAD WIRE
PL	PL	PROPERTY LINE
S	S	SANITARY SEWER
GW	GW	GARAGE WASTE
W	W	DOMESTIC WATER SERVICE
F	F	FIRE SERVICE
EP	EP	UNDERGROUND ELECTRIC PRIMARY SERVICE
ES	ES	UNDERGROUND ELECTRIC SECONDARY SERVICE
T	T	UNDERGROUND TELEPHONE SERVICE
CTV/F	CTV/F	UNDERGROUND CABLE TV & FIBER OPTIC
SL	SL	UNDERGROUND SITE LIGHTING SERVICE
FA	FA	UNDERGROUND FIRE ALARM SERVICE
64	64	CONTOUR
BCC	BCC	BITUMINOUS CONC. CURB
CCB	CCB	CAPE COD BERM
PCC	PCC	PRECAST CONC. CURB
SGC	SGC	SLOPED GRANITE CURB
VGC	VGC	VERTICAL GRANITE CURB
x64.75	x64.75	SPOT GRADE
		CHAINLINK FENCE
		CONSTRUCTION CHAINLINK FENCING
	DMH	DRAIN MANHOLE
	FES	FLARED END STRUCTURE
	SMH	SEWER MANHOLE
	CB	CATCH BASIN
	CB(DG)	DOUBLE GRATE CATCH BASIN
		UTILITY POLE
CTB	CTB	CONCRETE THRUST BLOCK
H.Y.D.		FIRE HYDRANT
M GV		GATE VALVE AND CURB BOX
		HANDICAP SYMBOL (PRKG. SPACE)
		HEADWALL
	ED	ELECTRIC MANHOLE
	TV	TELEPHONE MANHOLE
	PB	ELECTRIC PULL BOX
		SIGHT LIGHT POLE
	FDC	FIRE DEPARTMENT CONNECTION
		WETLAND
		BORING LOCATION
TP	TP	TEST PIT LOCATION
	C.T.E.	POINT OF CONNECTION TO EXISTING
	E.T.R.	EXISTING TO REMAIN
F.F.E.	F.F.E.	FINISH FLOOR ELEVATION (FIRST FLOOR)
	F&I	FURNISH AND INSTALL
	GCO	GROUND CLEANOUT
INV.	INV.	INVERT ELEVATION
	N.T.S.	NOT TO SCALE
	WQS	WATER QUALITY STRUCTURE
	V.I.F.	VERIFY IN FIELD
		TRAFFIC FLOW DIRECTION
	R&D	REMOVE & DISPOSE
	R&R	REMOVE & REPLACE
	×	REMOVE & DISPOSE
		ABANDON EXIST'G. UTILITY IN PLACE
		REMOVE & DISPOSE OF EXIST'G. UTILITY
	CLDI	CEMENT LINED DUCTILE IRON
	HDPE	HIGH DENSITY POLYETHYLENE
	PVC	POLYVINYL CHLORIDE
	RCP	REINFORCED CONCRETE PIPE
VC		VITRIFIED CLAY PIPE
AC		ASBESTOS CONCRETE PIPE

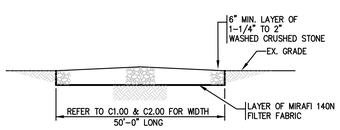

1 / C0.1 SITE ENTRANCE MAT DETAIL
N.T.S.
NOTE: IN THE EVENT THE CONTRACTOR IS TO INCLUDE ADDITIONAL SITE ENTRANCES ONTO THE PROJECT SITE, THE CONTRACTOR SHALL FURNISH & INSTALL AT NO ADDITIONAL COST TO THE OWNER AND SHALL CONFORM WITH THE SITE ENTRANCE MAT DETAIL.

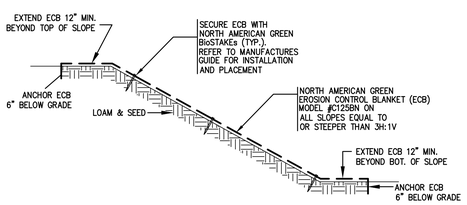

2 / C0.1 SLOPE PROTECTION TREATMENT DETAIL
N.T.S.

GENERAL NOTES

1. EXISTING CONDITIONS SHOWN WERE TAKEN FROM EXISTING CONDITIONS PLAN PREPARED BY SNELLING & HAMEL ASSOCIATES, INC. FOR THE TOWN OF CONCORD DATED NOVEMBER 27, 2013.
2. CONTRACTOR SHALL RETAIN THE SERVICES OF A REGISTERED LAND SURVEYOR TO LAYOUT ON THE GROUND ALL NEW ELEMENTS OF WORK. THE NEW WORK IS TO BE COMPLETED, MARKED, AND LAID OUT ON THE GROUND, REVIEWED AND APPROVED BY THE ARCHITECT PRIOR TO INSTALLATION. IF ANY WORK IS INSTALLED PRIOR TO THE ABOVE REQUIREMENT BEING MET, AND IF THE WORK IS NOT SATISFACTORY IN LAYOUT TO THE ARCHITECT, CONTRACTOR SHALL REPLACE THE WORK AT NO COST.
3. PRIOR TO ANY EXCAVATION, IN ADDITION TO "DIG SAFE", NOTIFY APPROPRIATE UTILITY COMPANY OR AUTHORITY TO VERIFY EXACT DEPTH AND LOCATION OF EXISTING UNDERGROUND UTILITIES. LOCATIONS AND DEPTHS OF EXISTING UTILITIES SHOWN ARE APPROXIMATE ONLY AND THE CONTRACTOR SHALL BE RESPONSIBLE TO LOCATE AND PROTECT UTILITIES IN THE FIELD WHETHER OR NOT SHOWN ON THE DRAWINGS.
4. THE DOCUMENTS MAY INDICATE RESULTS OF BORINGS AND/OR TEST PITS. THESE INVESTIGATIONS AND RESULTANT INTERPRETATIONS WERE MADE FOR THE SOLE PURPOSE OF PROVIDING DESIGN DATA FOR THE USE OF THE DESIGN TEAM ONLY. INTERPRETATION OF THE DATA FOR PURPOSES OF CONSTRUCTION IS THE SOLE RESPONSIBILITY OF THE CONTRACTOR. DURING THE COURSE OF CONSTRUCTION, ALL INTERPRETATIONS OF SOIL SUITABILITY SHALL BE MADE BY THE ARCHITECT. THE DECISION OF THE ARCHITECT SHALL BE FINAL AND BINDING ON THE CONTRACTOR.
5. REFER TO THE SPECIFICATIONS. IN ADDITION TO THOSE REQUIREMENTS, SITE PREPARATION SHALL ALSO INCLUDE THE FOLLOWING:
   A. IN THE COURSE OF INSTALLING THE UNDERGROUND UTILITIES, REMOVE ANY ABANDONED FOUNDATION, UTILITY STRUCTURES, ETC., ENCOUNTERED WHICH INTERFERE WITH THE UTILITY WORK. ALL SUCH STRUCTURES SHALL BE COMPLETELY REMOVED AND SHALL BE BACKFILLED WITH GRAVEL COMPACTED IN 9" LIFTS TO 95% COMPACTION TO 6" BELOW THE BOTTOM OF THE PIPE AND UTILITY.
   B. IF DURING EXCAVATION THE TRENCH WIDTH EXCEEDS THE SUM OF THE PIPE O.D. PLUS 2'-0", PLACE AND COMPACT THE FILL TO 12" ABOVE THE PIPE AND RE-EXCAVATE TO REQUIRED GRADES.
   C. AT THE POINT WHERE BULK EARTH MOVING HAS BEEN COMPLETED TO THE SUBGRADE LEVEL AND PRIOR TO PLACING UTILITIES, CURBING, OR PAVING, PROOF ROLL THE ENTIRE AREA IN THE PRESENCE AND UNDER THE SUPERVISION OF THE SOILS LABORATORY. PROOF- ROLLING SHALL CONSIST OF MAKING NOT LESS THAN (5) PASSES OVER THE AREA WITH A VIBRATOR DRUM ROLLER WEIGHING AT LEAST 10,000 lbs. THE SOILS LAB WILL CONDUCT FIELD DENSITY TESTS AND WILL DETERMINE CORRECTIVE MEASURES TO BE DONE, IF ANY, BASED ON THE PROOF-ROLLING.
6. ALL UTILITY WORK SHALL BE PERFORMED IN ACCORDANCE WITH LOCAL TOWN SPECIFICATIONS.
7. WATER AND FIRE SERVICE PIPING SHALL BE CLASS 52 DOUBLE CEMENT LINED DUCTILE IRON WITH TYTON JOINTS. FITTINGS SHALL BE 350 LB. GREY CASTINGS WITH MECHANICAL JOINT ENDS. ALL BENDS, TEES, ETC., SHALL BE JOINT RESTRAINED BY THE USE OF CONCRETE THRUST BLOCKS.
8. GATE VALVES SHALL BE CAST IRON BODY BRONZE MOUNTED, 200 PSI, COMPLETE WITH ROAD BOX AND CONFORMING IN EVERY RESPECT TO LOCAL SPECIFICATIONS.
9. STORM DRAINS 12" AND OVER SHALL BE ADS N-12 WATER TIGHT (WT) HDPE PIPE (H-20) WITH WATER TIGHT RUBBER GASKET JOINT UNLESS NOTED OTHERWISE. JOINTS SHALL MEET OR EXCEED ASTM D3212 LAB TEST AND ASTM C969 WATERTIGHT EXFILTRATION FIELD TEST.
10. SEWER PIPING AND STORM DRAINS 10" AND UNDER SHALL BE MANVILLE ASTM D-3034 SDR-35 P.V.C. SEWER PIPE WITH PUSH-ON RUBBER RING JOINTS. JOINTS SHALL MEET OR EXCEED ASTM F1417 WATERTIGHT FIELD TEST.
11. CONTRACTOR SHALL REFER TO SPECIFICATIONS AND DRAWINGS FOR PHASING OF PROJECT.
12. SEWER LINES SHALL BE INSTALLED AT MINIMUM 10 FOOT HORIZONTAL SEPARATION FROM ANY PROPOSED OR EXISTING WATER LINES.
13. WHENEVER SEWER LINES MUST CROSS WATER LINES THE SEWER SHALL BE INSTALLED SO THAT THE TOP OF THE SEWER IS AT LEAST 18 INCHES BELOW THE BOTTOM OF THE WATER MAIN. WHERE 18 INCH VERTICAL SEPARATION & 10 FEET HORIZONTAL SEPARATION CAN NOT BE MET AT WATER AND SEWER CROSSINGS, BOTH THE WATER AND SEWER PIPE SHALL BE CONSTRUCTED OF MECHANICAL JOINT CEMENT-LINED DUCTILE IRON PIPE FOR A DISTANCE OF 10 FEET ON EACH SIDE OF CROSSING. BOTH PIPES SHALL BE PRESSURE TESTED BY AN APPROVED METHOD TO ASSURE WATERTIGHTNESS.
14. WHENEVER NEW SEWER LINES CONNECT INTO EXISTING SEWER MANHOLES THE CONTRACTOR SHALL REBUILD THE SEWER MANHOLE CHANNEL TO ACCOMMODATE THE NEW CONNECTION.
15. WHENEVER UTILITIES OR STRUCTURES ARE TO BE INSTALLED WITHIN CITY/TOWN PUBLIC OR PRIVATE LAYOUT, THE EXCACATION SHALL BE BACKFILLED WITH FLOWABLE FILL. ALL AREAS OF ROADWAY PAVEMENT & WALKWAYS DISTURBED DURING CONSTRUCTION SHALL BE RE-PAVED PER LOCAL DPW STANDARDS.
16. WHENEVER ELECTRIC DUCT BANKS/CONDUITS MUST CROSS ANY UTILITY LINE SERVICE THE ELECTRIC DUCT BANKS/CONDUITS SHALL BE INSTALLED SO THAT THE BOTTOM OF THE ELECTRIC DUCT BANKS/CONDUITS ARE AT LEAST 12" ABOVE THE TOP OF THE UTILITY SERVICE. WHERE 12 INCH VERTICAL SEPARATION CAN NOT BE MET ABOVE THE TOP OF THE UTILITY SERVICE, THE ELECTRIC DUCT BANKS/CONDUITS SHALL BE RUN 12" BELOW THE BOTTOM OF THE UTILITY SERVICE.
17. CONTRACTOR SHALL MAKE PROVISIONS TO PROVIDE EXCAVATION AND BACKFILL SERVICES TO THE LOCAL GAS COMPANY FOR THE INSTALLATION OF NEW GAS SERVICE AND/OR THE THE REMOVAL OF EXISTING GAS SERVICES. COORDINATE ALL INSTALLATIONS AND REMOVAL OF GAS SERVICES WITH LOCAL GAS CO.
18. CONTRACTOR SHALL PREPARE AND SUBMIT THE EPA NOTICE OF INTENT (N.O.I.) FOR STORM WATER DISCHARGES ASSOCIATED WITH CONSTRUCTION ACTIVITY UNDER THE EPA NATIONAL POLLUTION DISCHARGE ELIMINATION SYSTEMS (NPDES) GENERAL PERMIT. CONTRACTOR SHALL DEVELOP AND IMPLEMENT A STORM WATER POLLUTION PREVENTION PLAN (SWPPP) PER THE REQUIREMENTS OF THE EPA GENERAL PERMIT. AT PROJECT COMPLETION CONTRACTOR SHALL SUBMIT A NOTICE OF TERMINATION (N.O.T.) TO THE EPA.
19. IN THE EVENT THE CONTRACTOR IS TO INSTALL TOP COURSE OF PAVEMENT 60 OR MORE DAYS AFTER INSTALLATION OF BINDER COURSE, THE CONTRACTOR SHALL INSTALL ALL CATCH BASIN GRATES AND MANHOLE COVERS AT GRADE WITH BINDER COURSE AND SHALL BE RESPONSIBLE FOR RAISING STRUCTURES TO FINISHED GRADE.

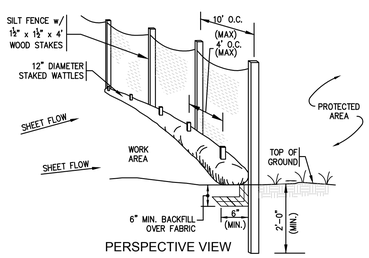

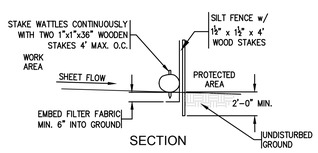

3 / C0.1 COMPOST WATTLE FILTER SOCK & FABRIC DETAIL
N.T.S.
NOTES:
1. FILTER SOCK SHALL BE 12" DIAMETER STRAW WATTLE BY NORTH AMERICAN GREEN OR APPROVED EQUAL.
2. SOCKS TO BE FILLED WITH COMPACTED STRAW OR APPROVED EQUAL.

EROSION & SEDIMENT CONTROL NARRATIVE

1. EROSION CONTROL MEASURES SHOWN HEREIN ARE A MINIMUM. CONTRACTOR SHALL FURNISH THE SERVICES OF AN INDEPENDENT PROFESSIONAL ENGINEER OR A CERTIFIED PROFESSIONAL IN EROSION AND SEDIMENT CONTROL TO PREPARE A STORMWATER POLLUTION PREVENTION PLAN (SWPPP). PRIOR TO COMMENCEMENT OF DEMOLITION SITE PREPARATION OR EARTHWORK SAID PLAN SHALL BE IMPLEMENTED. THE INITIAL METHOD OUTLINED IS INTENDED TO ROUTE ALL PRACTICABLE SURFACE WATER FROM THE EXCAVATION AREA INTO EROSION CONTROL FACILITIES. THE CONTRACTOR SHALL INSTALL ANY ADDITIONAL PROTECTIVE MEASURES AS MAY BE REQUIRED TO CONTROL EROSION AND SEDIMENT RUNOFF FROM THE SITE DURING CONSTRUCTION.
2. STAKE THE LIMIT OF WORK TO ENSURE THAT ALL WORK WILL BE INSIDE THE EROSION CONTROL FACILITY. THE LIMIT OF WORK WILL BE INDICATED BY ORANGE CONSTRUCTION MESH. THE MESH WILL INCLUDE BUILDINGS, PARKING FACILITIES, ACCESS ROADS, DETENTION/RETENTION BASINS, EQUIPMENT STAGING AREAS AND ALL MATERIAL STOCKPILE AND HANDLING AREAS.
3. PRIOR TO THE START OF ANY CONSTRUCTION ACTIVITIES ON SITE, A PRE-CONSTRUCTION CONFERENCE SHALL BE HELD ON SITE TO ESTABLISH SUPERVISORY AND INSPECTION PROCEDURES FOR SEDIMENT AND EROSION CONTROL MEASURES. THIS MEETING SHALL BE ATTENDED BY THE CONTRACTOR, APPLICANT/OWNER, ARCHITECT/ENGINEER AND THE LOCAL CONSERVATION AGENT.
4. THE CONTRACTOR SHALL BE TOTALLY RESPONSIBLE FOR PROTECTION OF ANY LANDS OR PROPERTIES AS MAY BE SUBJECT TO ANY AFFECT OR BY-PRODUCT OF HIS DEMOLITION/CONSTRUCTION EFFORT. SPECIAL CARE SHALL BE TAKEN TO AVOID EROSION OF FILL OR CUT SLOPES ONTO ADJACENT PROPERTIES OR DOWNSTREAM SILTATION OF DIVERSION OF EXISTING DRAINAGE. ANY DAMAGE IS TO BE CORRECTED IMMEDIATELY BY THE CONTRACTOR AT NO COST TO THE OWNER.
5. THE WORK IS TO BE PHASED. CONSTRUCT THE PROJECT IN PHASES AS DIRECTED BY THE ARCHITECT/ENGINEER TO SUIT THE PROJECT SCHEDULE.
6. GENERAL SEQUENCE SHALL BE AS FOLLOWS:
   A. ESTABLISH HAYBALE/SILT BARRIER & CONSTRUCTION FENCE PRIOR TO ANY EARTHWORK
   B. INSTALL SITE ENTRANCE MATS AT SITE CONSTRUCTION ENTRANCES AS DETAILED.
   C. CONSTRUCT TEMPORARY SETTLING BASINS AND INSTALL EROSION CONTROL DEVICES.
   D. CLEAN AND GRUB VEGETATION AS REQUIRED; REMOVE AND DISPOSE OF ALL STUMPS FROM SITE.
   E. PERFORM MASS EARTHWORK AND ROCK EXCAVATION FOR THE SITE.
   F. PROTECT ALL EXISTING AND PROPOSED DRAINAGE STRUCTURES FROM SEDIMENT BY THE USE OF DANDY BAGS AND HAY BALES AT CATCH BASIN AS DETAILED.
7. AT NO TIME SHALL SILT LADEN WATER BE ALLOWED TO ENTER ENVIRONMENTALLY SENSITIVE AREAS AND EXISTING OR NEW DRAINAGE SYSTEMS. RUNOFF FROM DISTURBED SURFACES SHALL BE DIRECTED THROUGH SETTLING BASINS AND EROSION CONTROL MEASURES PRIOR TO ENTERING ANY ENVIRONMENTALLY SENSITIVE AREAS OR THE DRAINAGE SYSTEM.
8. DEWATER ALL EXCAVATIONS AND TRENCHES, AS REQUIRED, WITH DEWATERING BAGS AND OUTFALLS AT CONTROLLED TEMPORARY SETTLING BASINS.
9. INSTALL STONE REINFORCED SILT BARRIER AROUND STOCKPILE AREAS, TRUCK WASH DOWN AREAS AND VEHICLE FUELING AREAS.
10. INSTALL TEMPORARY SEED OR MULCH AND EROSION CONTROL BLANKETS (ECB) TO ALL AREAS IMMEDIATELY UPON FORMATION OF GRADES.
11. SURFACE STABILIZATION MUST BE IMPLEMENTED WITHIN 14 DAYS AFTER CONSTRUCTION ACTIVITY IN A PORTION OF THE SITE THAT HAS CEASED OR IS TEMPORARILY HALTED.
12. TRUCK WASH DOWN AREA SHALL BE 20'(L)X20'(W) AT A MINIMUM SURROUNDED BY STONE REINFORCED SILT BARRIER. ACCUMULATED CONCRETE SHALL BE EITHER RECYCLED ON SITE OR DISPOSED OF AT AN APPROVED OFF-SITE LOCATION.
13. CONTRACTOR REFUELING AREA SHALL BE 20'(L)X20'(W) AT A MINIMUM SURROUNDED BY STONE REINFORCED SILT BARRIER. AREA SHALL BE SCRAPED AND REDRESSED MONTHLY. THE DEPTH SHALL BE DETERMINED IN THE FIELD. SCRAPED MATERIAL SHALL BE REMOVED AND DISPOSED OF AT AN APPROVED OFF-SITE LOCATION.
14. AS SOON AS PAVING OF DRIVES IS COMPLETED, ALL DRAINAGE STRUCTURES SHALL BE CLEANED OF ANY ACCUMULATED SEDIMENT. THEREAFTER, CLEAN UP SHOULD FOLLOW LONG TERM MAINTENANCE PLAN.
15. CONTINUALLY MONITOR ALL SILT BARRIER AND EROSION CONTROL DEVICES ON A WEEKLY BASIS, REPAIR ANY DAMAGED AREAS IMMEDIATELY. REMOVE ALL CAPTURED SEDIMENT AS REQUIRED AND DISPOSE OF. INSTALL ADDITIONAL MEASURES AS DIRECTED BY THE OWNER, LOCAL DPW, CONSERVATION OFFICER AND THE ARCHITECT/ENGINEER.
16. CONTRACTOR SHALL REDUCE SURFACE AND AIR MOVEMENT OF DUST FROM EXPOSED SOIL SURFACES AS REQUIRED BY CONSTRUCTION ACTIVITIES. CONSTRUCTION ACTIVITIES SHALL BE SO SCHEDULED SO THAT THE LEAST AREA OF DISTURBED SOIL IS EXPOSED AT ONE TIME. IN DISTURBED AREAS NOT SUBJECT TO TRAFFIC, CONTRACTOR SHALL USE TEMPORARY SEEDING AND MULCHING OPERATIONS. IN DISTURBED AREAS SUBJECT TO TRAFFIC, CONTRACTOR SHALL SPRINKLE SURFACE WITH WATER TO MINIMIZE DUST. DUST CONTROL MEASURES SHALL BE MAINTAINED THROUGH DRY WEATHER PERIODS UNTIL ALL DISTURBED AREAS HAVE BEEN PERMANENTLY STABILIZED.
17. REMOVE CONSTRUCTION FENCE, SILT BARRIER AND EROSION CONTROL MEASURES ONLY AFTER ESTABLISHMENT OF PERMANENT VEGETATION.

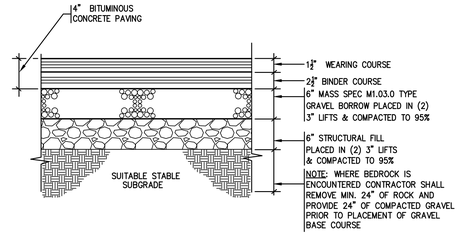

4 / C0.1 STANDARD PAVING SECTION
N.T.S.

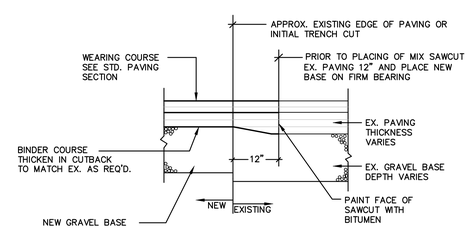

5 / C0.1 DETAIL OF PAVING ADDITION AT EXISTING AREAS
N.T.S.

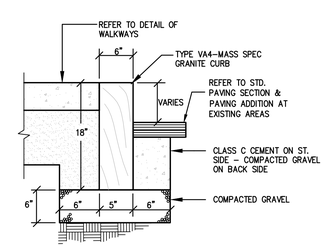

6 / C0.1 DETAIL OF VERTICAL GRANITE CURB
N.T.S.

STORMWATER SYSTEM MAINTENANCE NOTES

THE DRAINAGE SYSTEMS ARE TO BE MONITORED THROUGHOUT THE ENTIRE CONSTRUCTION PERIOD BY THE CONTRACTOR. UPON COMPLETION OF THE PROJECT THE CONTRACTOR SHALL DO A FULL MAINTENANCE OF THE STORMWATER SYSTEM AND SITE. UPON COMPLETION OF THE CONTRACTORS FINAL MAINTENANCE CLEAN UP THE PROJECT MONITORING SHALL BE THE RESPONSIBILITY OF THE CONCORD FREE PUBLIC LIBRARY, HEREAFTER REFERRED TO AS THE OWNER. DURING CONSTRUCTION THE CONTRACTOR SHALL BE REQUIRED TO KEEP AND SUBMIT A WEEKLY LOG OF ALL INSPECTIONS AND REQUIRED MAINTENANCE. THIS LOG SHALL BE MADE AVAILABLE TO THE DPW, BOH, ARCHITECT & ENGINEER AT ALL TIMES.

UPON SUBSTANTIAL COMPLETION OF THE PROJECT. THE OWNER SHALL DESIGNATE A QUALIFIED PROFESSIONAL ENTITY OR INDIVIDUAL TO PERFORM ALL MONITORING. THE NAME, ADDRESS AND TELEPHONE NUMBER OF THE ENTITY OR INDIVIDUAL SHALL BE PROVIDED TO THE LOCAL CONSERVATION COMMISSION, DPW & BOH. THE OWNER'S REPRESENTATIVE SHALL BE REQUIRED TO KEEP A LOG OF ALL REQUIRED INSPECTIONS AND MAINTENANCE REQUIRED. THE LOG SHALL BE MADE AVAILABLE TO THE CONSERVATION COMMISSION, DPW & BOH.

THE DRAINAGE SYSTEMS INCLUDE DEEP-SUMP CATCH BASINS, WATER QUALITY STRUCTURES, LEACHING PITS AND SUBSURFACE INFILTRATION BEDS. THESE FACILITIES PROVIDE PARTIAL TREATMENT OF STORMWATER RUNOFF PRIOR TO DISCHARGE AND/OR INFILTRATION TO GROUNDWATER.

PRIOR TO THE COMMENCEMENT OF EARTHWORK ACTIVITIES, FURNISH ALL LABOR, EQUIPMENT AND TOOLS REQUIRED TO INSPECT AND CLEAN ALL EXISTING CATCH BASINS, DRAIN INLETS, DRAIN MANHOLES, OUTLETS AND INTERCONNECTING PIPE WITHIN THE LIMITS OF THE PROPERTY. FURNISH A REPORT OUTLINING INSPECTION AND CLEANING RESULTS TO THE THE ARCHITECT.

CONSTRUCTION MONITORING/MAINTENANCE PROCEDURES SHALL BE AS FOLLOWS: (RESPONSIBILITY OF CONTRACTOR)

1. SILT BARRIER:
   MONITOR SILT BARRIER ON A WEEKLY BASIS AND AFTER EVERY RAIN STORM. REPAIR ANY DAMAGED AREAS IMMEDIATELY. REMOVE AND DISPOSE OF ALL CAPTURED SEDIMENT.
2. PAVED AREAS:
   PARKING LOT, ROAD AND ALL ACCESS WAYS AND GUTTERS SHALL BE SWEPT CLEAN OF ALL DEBRIS. SWEEPING SHALL BE PERFORMED ON A WEEKLY BASIS.
3. DRAIN INLET:
   ALL DRAIN INLETS SHALL BE INSTALLED AS DETAILED AND INSPECTED AFTER EVERY RAIN STORM. SHOULD CATCH BASIN SUMPS BECOME FILLED WITH SEDIMENT TO HALF ITS DEPTH (2') OR (1') FOR DRAIN MANHOLES THEY SHALL BE CLEANED IMMEDIATELY.
4. WATER QUALITY CATCH BASINS:
   ALL CATCH BASINS AND DRAIN MANHOLES SHALL BE INSTALLED AS DETAILED AND INSPECTED AFTER EVERY RAIN STORM. WHEN THE STRUCTURE BECOME FILLED WITH SEDIMENT TO A DEPTH
5. SUBSURFACE INFILTRATION CHAMBERS:
   SUBSURFACE INFILTRATION CHAMBERS SHALL BE INSPECTED AFTER EVERY RAIN STORM. CARE SHALL BE TAKEN TO PREVENT SILTATION OF THE BEDS AFTER INSTALLATION. PRETREATMENT BMP'S (CATCH BASINS AND WATER QUALITY STRUCTURES) MUST BE MAINTAINED AND CLEANED PER THE AFOREMENTIONED PROCEDURES TO ENSURE PROPER FUNCTIONING. BEDS SHALL BE MONITORED FOR ANY PONDING AND SEDIMENT/DEBRIS. SEDIMENT AND DEBRIS SHALL BE REMOVED BY A VAC-TRUCK.
6. SWALES:
   SWALES SHALL BE INSPECTED AFTER EVERY RAIN STORM. SWALE SHALL BE MONITORED FOR ANY SLOPE EROSION, PONDING AND SEDIMENTATION. ACCUMULATED SEDIMENT AND DEBRIS SHALL BE REMOVED, BY HAND AND DISPOSED OF. MAINTAIN ALL EROSION CONTROL MEASURES DURING THE COURSE OF CONSTRUCTION AND IN ACCORDANCE WITH THE SWPPP.

DISPOSAL OF THE ACCUMULATED SEDIMENT MUST BE IN ACCORDANCE WITH ALL APPLICABLE LOCAL, STATE, AND FEDERAL GUIDELINES AND REGULATIONS.

POST CONSTRUCTION MONITORING/MAINTENANCE PROCEDURES SHALL BE AS FOLLOWS: (RESPONSIBILTY OF THE OWNER)

1. PAVED AREAS:
   PARKING LOT, ROAD AND ALL ACCESS WAYS AND GUTTERS SHALL BE SWEPT CLEAN OF ALL DEBRIS. SWEEPING SHALL BE PERFORMED ONCE A MONTH USING A MECHANICAL SWEEPER OR EVERY THREE MONTHS USING A HIGH EFFICIENCY VACUUM SWEEPER OR REGENERATIVE AIR SWEEPER SCHEDULED IN SPRING, SUMMER, FALL AND WINTER.
2. WATER QUALITY CATCH BASINS:
   ALL WATER QUALITY CATCH BASINS SHALL BE INSPECTED TO ENSURE FRAMES AND GRATES ARE NOT DAMAGED, AND UNIT IS DRAINING FREELY ON A MONTHLY BASIS. INSPECT UNIT IMMEDIATELY AFTER ANY FUEL, OIL OR CHEMICAL SPILL. CLEAN STRUCTURES SEMIANNUALLY AT THE END OF FOLIAGE AND SNOW REMOVAL SEASONS OR ONCE SEDIMENT DEPTH REACHES 15% OR APPROXIMATELY 8", OF STORAGE CAPACITY.
3. DRAIN INLET:
   ALL DRAIN INLETS SHALL BE INSPECTED TO ENSURE THEY HAVE ADEQUATE SUMP CAPACITY, OIL/GREASE HOODS ARE IN PLACE, FRAMES AND GRATES ARE NOT DAMAGED. DRAIN INLETS SHALL BE INSPECTED EVERY THREE MONTHS SCHEDULED IN SPRING, SUMMER, FALL AND WINTER AND AT THE END OF THE FOLIAGE AND SNOW REMOVAL SEASONS. DRAIN INLET SUMPS SHALL BE CLEANED ANNUALLY OR WHEN THE DRAIN INLET SUMPS BECOME FILLED WITH SEDIMENT TO HALF ITS DEPTH.
4. SUBSURFACE INFILTRATION CHAMBERS:
   SUBSURFACE INFILTRATION CHAMBERS SHALL BE INSPECTED SEMIANNUALLY AT THE END OF FOLIAGE AND SNOW REMOVAL SEASONS, AND AFTER EVERY MAJOR STORM EVENT (1" OR GREATER RAINFALL OVER A 24 HOUR PERIOD). BEDS SHALL BE MONITORED FOR ANY PONDING AND SEDIMENTATION/DEBRIS. SEDIMENT AND DEBRIS SHALL BE REMOVED BY A VAC-TRUCK. AFTER THE MAJOR STORM EVENT THE SYSTEM SHALL BE MONITORED FOR A 72 HOUR PERIOD. IF SYSTEM FAILS TO DRAIN WITHIN A 72 HOUR PERIOD THE OWNER SHALL RETAIN A QUALIFIED PROFESSIONAL ENGINEER TO ASSESS WHETHER THE INFILTRATION BED HAS FAILED AND RECOMMENDED ANY CORRECTIVE ACTION THAT IS REQUIRED.

DISPOSAL OF THE ACCUMULATED SEDIMENT MUST BE IN ACCORDANCE WITH ALL APPLICABLE LOCAL, STATE, AND FEDERAL GUIDELINES AND REGULATIONS. IF ANY STRUCTURE OR OUTFALL INDICATES THE PRESENCE OF PETROLEUM IT SHALL BE REMOVED AND DISPOSED OF IMMEDIATELY IN ACCORDANCE WITH APPLICABLE REGULATIONS.

THE RESULTS OF THE INSPECTIONS, ALONG WITH THE DETERMINATION OF ANY REMEDIAL WORK THAT MAY BE FOUND TO BE NECESSARY AS A RESULT OF THE INSPECTION, SHALL BE SUBMITTED TO THE CONSERVATION COMMISSION WITHIN (30) DAYS OF THE INSPECTION. PROVISIONS FOR INSPECTIONS AND ANY REMEDIAL REPAIRS DEEMED NECESSARY SHALL BE THE RESPONSIBILITY OF THE OWNER.

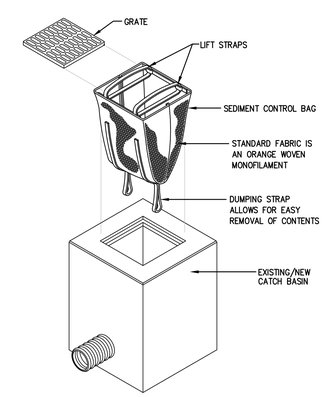

7 / C0.1 SEDIMENT CONTROL BAG
N.T.S.

JOHNSON ROBERTS ASSOCIATES INC.
ARCHITECTS
15 PROPERZI WAY
SOMERVILLE, MA
01243 - 3228

GARCIA-GALUSKA-DESOUSA
CONSULTING ENGINEERS INC.
370 FAUNCE CORNER ROAD, DARTMOUTH, MA 02747-1217
508-998-5700 • FAX 508-998-0883 • E-MAIL: info@g-g-d.com

Revisions:

CONCORD FREE PUBLIC LIBRARY EXPANSION
CONCORD, MA

Sheet Title:
Site Legend, Notes & Details

Date: 24-Oct-19 Drawn By: NCK
Scale: AS NOTED Project No.: 1714

C0.1

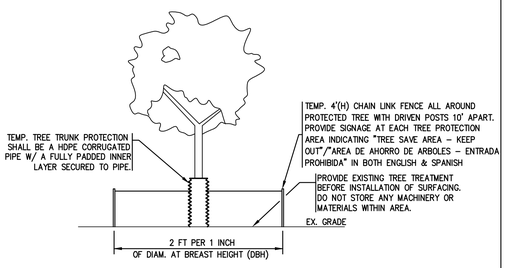

1 C0.2 TREE PROTECTION DETAIL
N.T.S.

TREE PROTECTION SHALL BE INSTALLED AT ALL EXISTING TREES TO REMAIN AND 6" DIAMETER AND LARGER. REFER TO THE TOWN OF CONCORD TREE PRESERVATION BYLAW

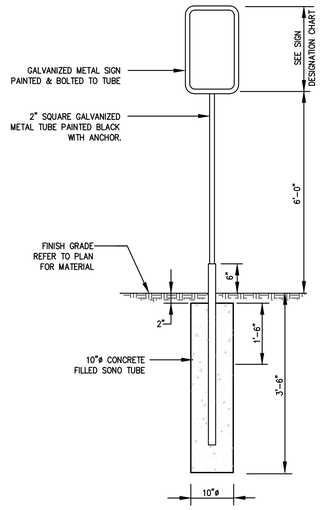

SIGN DESIGNATION CHART			
SIGN DESIGNATION	HEIGHT	WIDTH	SIGN
R7-8 "ACCESSIBLE PARKING"	18"	12"	RESERVED PARKING
R7-8b "VAN ACCESSIBLE"	6"	12"	VAN ACCESSIBLE
CS-1 CUSTOM SIGN: "LIBRARY VEHICLE ONLY"	18"	12"	RESERVED PARKING LIBRARY VEHICLE ONLY

5 C0.2 SIGNAGE DETAIL
N.T.S.

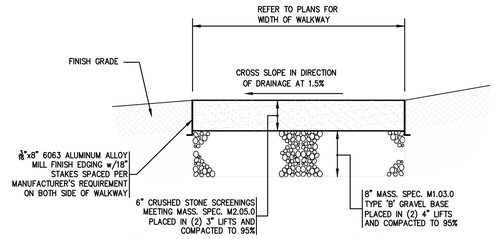

6 C0.2 STONE DUST WALKWAY DETAIL
N.T.S.

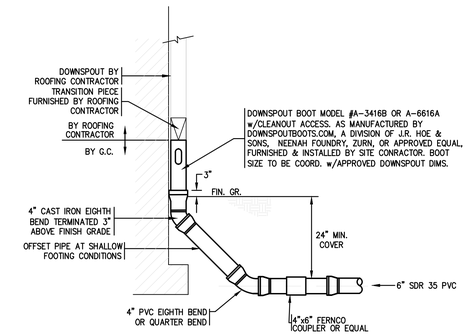

10 C0.2 DOWNSPOUT CONNECTION AT GRADE DETAIL
N.T.S.
NOTE:
REFER TO TRENCH SECTION DETAIL FOR PIPE BEDDING REQUIREMENTS

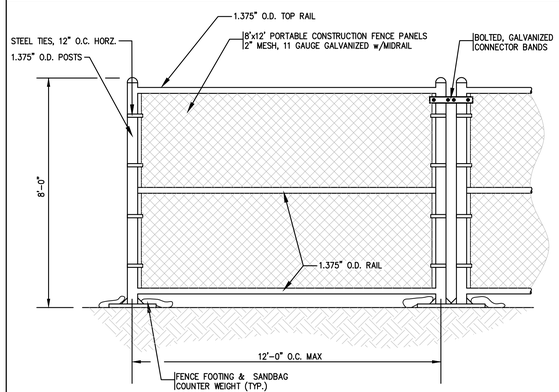

2 C0.2 TEMPORARY CONSTRUCTION FENCE DETAIL
N.T.S.

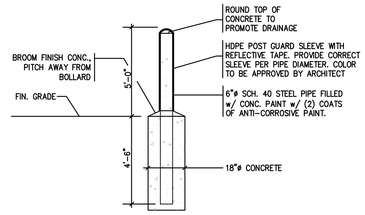

7 C0.2 PROTECTIVE BOLLARD DETAIL
N.T.S.
NOTE:
1. BOLLARD, GALVANIZED & PRIME COATED BY SECTION 055000.
2. HDPE POST GUARDS TO BE FITTED TO THE DIAMETER OF THE POSTS. TWO REFLECTIVE SAFETY STRIPES ON EACH BOLLARD.
3. HDPE POST GUARDS SHALL BE STANDARD BUMPER POST BY STOR-QUIP SYSTEMS, INC., BOLLARDGARD BY INNOPLAST, POST GUARD BY ENCORE COMMERCIAL PRODUCTS, INC. OR APPROVED EQUAL.

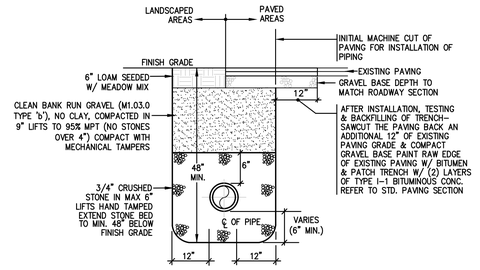

11 C0.2 TYPICAL TRENCH SECTION FOR DRAINAGE & SEWER
N.T.S.

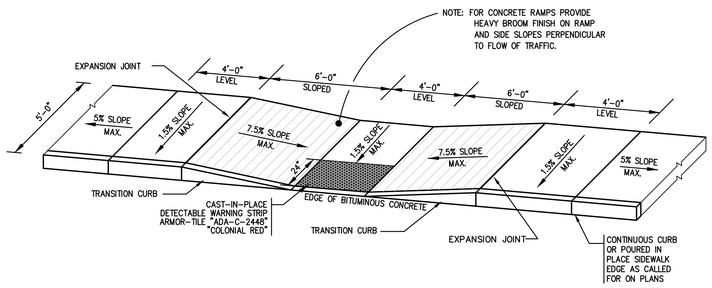

3 C0.2 DETAIL OF ACCESSIBLE CURB CUT
N.T.S.

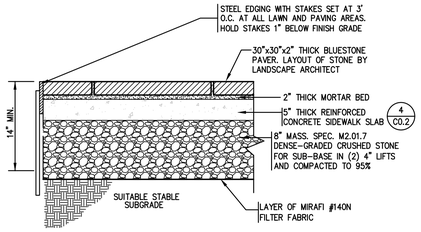

8 C0.2 BLUESTONE PLAZA SECTION
N.T.S.
NOTE: DURING INSTALLATION, THE CONTRACTOR SHALL MONITORING THAT ALL STONES PLACED IN CONCRETE BED MEET THE REQUIREMENTS OF MAAB AND ADA.

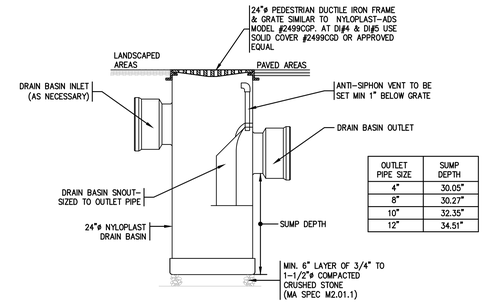

OUTLET PIPE SIZE	SUMP DEPTH
4"	30.05"
8"	30.27"
10"	32.35"
12"	34.51"

12 C0.2 PLASTIC DRAIN INLET DETAIL
N.T.S.
NOTE:
1. ALTERNATE MANUFACTURERS SHALL INCLUDE HARCO AND ADS PIPE.
2. ALL GRATES SHALL BE PEDESTRIAN GRADE AND MEET THE REQUIREMENTS OF MAAB/ADA.
3. FURNISH & INSTALL SEDIMENT CONTROL BAGS IN ALL DRAIN INLET STRUCTURES. INSPECT & MAINTAIN ALL STRUCTURES ON A WEEKLY BASIS UNTIL SITE IS ENTIRELY STABILIZED.

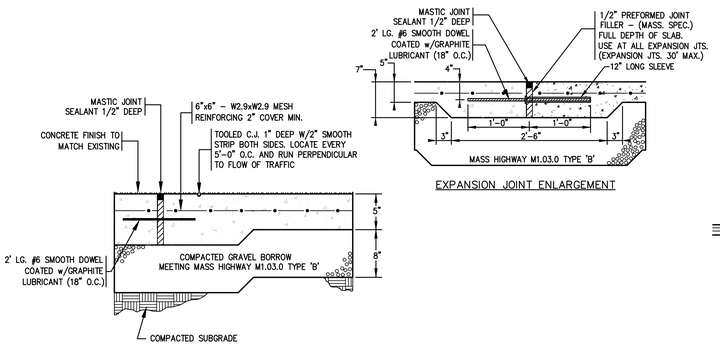

4 C0.2 CONCRETE SIDEWALK DETAIL
NTS
NOTE:
CONTRACTOR TO INSTALL MASTIC JOINT SEALANT AND PREFORMED JOINT FILLER AT ALL LOCATIONS WHERE SIDEWALK ABUTS THE BUILDING.

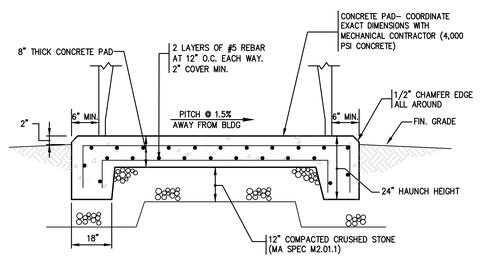

9 C0.2 CONCRETE EQUIPMENT PAD DETAIL
N.T.S.
PAD DIMENSIONS:
PAD #1: 3.5' x 12.5' – MECHANICAL EQUIPMENT PAD
FINAL PAD DIMENSIONS TO BE COORDINATED WITH APPROVED EQUIPMENT SHOP DRAWINGS.

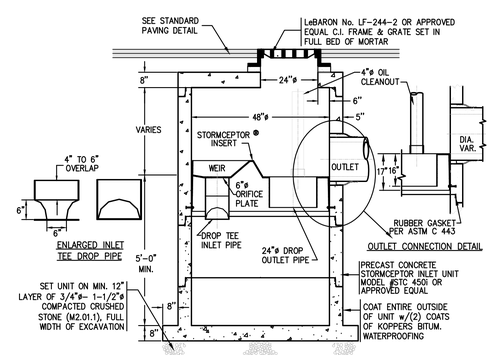

13 C0.2 STORMCEPTOR CATCH BASIN DETAIL
N.T.S.
NOTE:
1. ALTERNATE MANUFACTURERS SHALL INCLUDE CONTECH CDS, HYDROWORKS HYDROGUARD AND HYDRO INTERNATIONAL DOWNSTREAM DEFENDER.

JOHNSON ROBERTS ASSOCIATES INC.
ARCHITECTS
15 PROPERZI WAY
SOMERVILLE, MA
01243 - 3228

GARCIA-GALUSKA-DESOUSA
CONSULTING ENGINEERS INC.
370 FAUNCE CORNER ROAD, DARTMOUTH, MA 02747-1217
508-998-5700 • FAX 508-998-0883 • E-MAIL info@g-g-d.com

Revisions:

CONCORD FREE PUBLIC LIBRARY EXPANSION

CONCORD, MA

Sheet Title:

Site Details

Date: 24-Oct-19 Drawn By: NCK

Scale: AS NOTED Project No.: 1714

C0.2

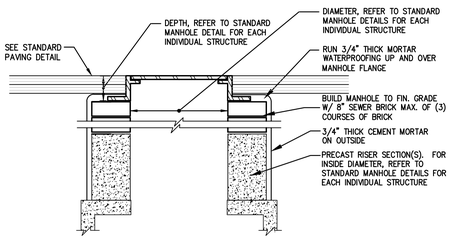

1 / C0.3 MANHOLE RISER DETAIL
N.T.S.

4 / C0.3 BLANK
N.T.S.

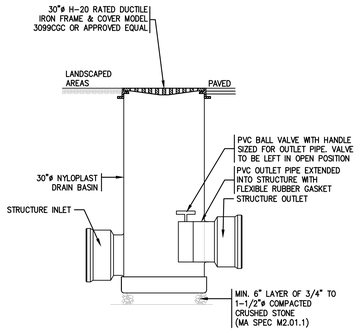

2 / C0.3 OUTLET CONTROL STRUCTURE WITH ISOLATION VALVE DETAIL
N.T.S.

5 / C0.3 BLANK
N.T.S.

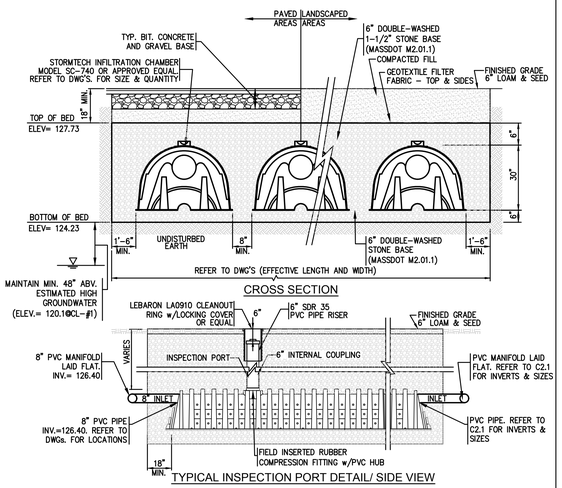

3 / C0.3 SUBSURFACE INFILTRATION BED (SIB#1) DETAIL
N.T.S.

NOTES:
1. REFER TO PLAN 1/C2.1 FOR LOCATIONS OF INSPECTION PORTS. CONTRACTOR TO FURNISH ALL MATERIAL AND LABOR TO CONNECT 6" PVC INSPECTION RISERS TO CHAMBERS
2. REFER TO PLAN 1/C2.1 FOR CHAMBER CONFIGURATIONS AND VOLUME REQUIREMENTS.

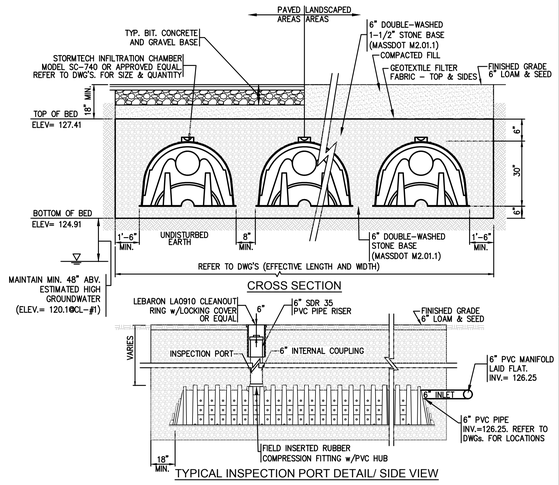

6 / C0.3 SUBSURFACE INFILTRATION BED (SIB#2) DETAIL
N.T.S.

NOTES:
1. REFER TO PLAN 1/C2.1 FOR LOCATIONS OF INSPECTION PORTS. CONTRACTOR TO FURNISH ALL MATERIAL AND LABOR TO CONNECT 6" PVC INSPECTION RISERS TO CHAMBERS
2. REFER TO PLAN 1/C2.1 FOR CHAMBER CONFIGURATIONS AND VOLUME REQUIREMENTS.

JOHNSON ROBERTS ASSOCIATES INC.
ARCHITECTS
15 PROPERZI WAY
SOMERVILLE, MA
01243 - 3228

GARCIA-GALUSKA-DESOUSA INC.
CONSULTING ENGINEERS
370 FAUNCE CORNER ROAD, DARTMOUTH, MA 02747-1217
508-998-5700 • FAX 508-998-0883 • E-MAIL info@g-g-d.com

Revisions:

CONCORD FREE PUBLIC LIBRARY EXPANSION

CONCORD, MA

Sheet Title:

Site Details

Date: 24-Oct-19 Drawn By: NCK

Scale: AS NOTED Project No.: 1714

C0.3

REMOVE EX. VERTICAL GRANITE CURB. REINSTALL AS SHOWN ON DRAWING C1.1

SAWCUT & REMOVE EX. BIT. CONC. TO MIN. EXTENT REQUIRED TO REMOVE & REPLACE SEWER SERVICE

7 / C0.1 INSTALL & MAINTAIN SEDIMENT CONTROL BAG AT EX. CATCH BASIN

CUT, CAP & ABANDON EX. WATER SERVICE

3 / C0.2 SILT BARRIER/COMPOST WATTLE FILTER SOCK LINE

TYP.(2)– REMOVE & DISPOSE OF EXISTING BRICK WALKWAY FROM BUILDING TO SIDEWALK

TYP.(8)– REMOVE & DISPOSE OF EXISTING TREES

3 / C0.2 SILT BARRIER/COMPOST WATTLE FILTER SOCK LINE

TYP.(7)– REMOVE & DISPOSE OF EXISTING TREES

TREE PROTECTION SHALL BE INSTALLED AT ALL EXISTING TREES TO REMAIN AND 6" DIAMETER AND LARGER. REFER TO THE TOWN OF CONCORD TREE PRESERVATION BYLAW

REMOVE & DISPOSE OF PORTIONS OF EXISTING BUILDING. REFER TO ARCH. DWGs. FOR AREAS OF DEMOLITION. CUT, CAP & MAKE SAFE ALL EXISTING UTILITIES

REMOVE & DISPOSE OF EXISTING CATCH BASIN FRAME, GRATE, STRUCTURE AND ASSOCIATED PIPING. BACKFILL WITH STRUCTURAL FILL

REMOVE & DISPOSE OF EXISTING GARAGE BUILDING. CUT, CAP & MAKE SAFE ALL EXISTING UTILITIES TO BUILDING

3 / C0.2 SILT BARRIER/COMPOST WATTLE FILTER SOCK LINE

15' ZONING SIDE SETBACK

REMOVE & DISPOSE OF EXISTING PERGOLA STRUCTURES

REMOVE & DISPOSE OF EXISTING SHED. CUT, CAP & MAKE SAFE ALL EXISTING UTILITIES TO SHED

TYP.(8)– REMOVE & DISPOSE OF EXISTING TREES

3 / C0.2 SILT BARRIER/COMPOST WATTLE FILTER SOCK LINE

TYP.– PROTECT (2) TREES DURING SHED REMOVAL & DEMOLITION

TREE PROTECTION SHALL BE INSTALLED AT ALL EXISTING TREES TO REMAIN AND 6" DIAMETER AND LARGER. REFER TO THE TOWN OF CONCORD TREE PRESERVATION BYLAW

EX. ABANDONED WATER SERVICE. EXACT LOCATION UNKNOWN

REMOVE & DISPOSE (R&D) EX. CONCRETE SIDEWALK & APRON

SAWCUT EX. BIT. CONCRETE ROADWAY & REMOVE EX. BIT. CONC. FOR NEW PARKING SPACES. COORD. w/LOCAL DPW

SILT BARRIER/COMPOST WATTLE FILTER SOCK LINE 3 / C0.2

TYP.(3)– REMOVE & DISPOSE OF EXISTING TREES

SAWCUT EX. CONCRETE SIDEWALK TO LIMITS INDICATED

TYP.(2)– REMOVE & DISPOSE OF EXISTING GRAVEL DRIVEWAYS TO LIMITS SHOWN.. REMOVE MIN. 6" OF MATERIAL WITHIN LIMITS.

SILT BARRIER/COMPOST WATTLE FILTER SOCK LINE 3 / C0.2

F&I TREE PROTECTION MEASURES 1 / C0.2

TYP.(4)– REMOVE & DISPOSE OF EXISTING CATCH BASIN FRAME, GRATE, STRUCTURE AND ASSOCIATED PIPING. BACKFILL WITH STRUCTURAL FILL

REMOVE & DISPOSE OF EXISTING TREES

TYP.(2)– REMOVE & DISPOSE OF EXISTING GRAVEL DRIVEWAYS TO LIMITS SHOWN.. REMOVE MIN. 6" OF MATERIAL WITHIN LIMITS.

REMOVE & DISPOSE OF EXISTING CATCH BASIN FRAME, GRATE, STRUCTURE AND ASSOCIATED PIPING. BACKFILL WITH STRUCTURAL FILL

REMOVE & DISPOSE OF EXISTING CHAIN LINK FENCE & DOUBLE LEAF GATE

REMOVE & DISPOSE OF EXISTING ELECTRICAL CONDUIT

REMOVE & DISPOSE OF EXISTING TREES

SILT BARRIER/COMPOST WATTLE FILTER SOCK LINE 3 / C0.2

REMOVE & DISPOSE OF EXISTING CONCRETE WALKWAY TO LIMITS SHOWN.

SILT BARRIER/COMPOST WATTLE FILTER SOCK LINE 3 / C0.2

MATCHLINE 1/C1.0 MATCHLINE 2/C1.0

REMOVE & DISPOSE OF

1 / C1.0 SITE DEMOLITION & PREPARATION PLAN
SCALE: 1" = 20'

SILT BARRIER/COMPOST WATTLE FILTER SOCK LINE 3 / C0.2

MATCHLINE 1/C1.0 MATCHLINE 2/C1.0

REMOVE & DISPOSE OF EXISTING TREES

EXISTING DRAINAGE LEACHING PITS TO REMAIN

EXISTING NATURAL GAS SERVICE TO REMAIN

EXISTING 6" FIRE SERVICE TO REMAIN

EXISTING 2" DOMESTIC WATER SERVICE TO REMAIN

REMOVE & DISPOSE OF RHODODENDRON & BUSHES TO EXTENTS INDICATED

PROTECT EXISTING MEMORIAL TREE

EXISTING FREE-STANDING FIRE DEPARTMENT CONNECTION TO REMAIN

3 / C0.2 SILT BARRIER/COMPOST WATTLE FILTER SOCK LINE

SAWCUT & REMOVE EX. CONCRETE WALKWAY TO MIN. EXTENT REQUIRED TO INSTALL NEW PRIMARY DUCTBANK

REMOVE EX. GRANITE CURB FOR DUCTBANK INSTALL. REINSTALL UPON DUCTBANK COMPLETION

SAWCUT & REMOVE EX. BIT. CONC. TO MIN. EXTENT REQUIRED TO INSTALL NEW PRIMARY DUCTBANK

REMOVE EX. GRANITE CURB FOR DUCTBANK INSTALL. REINSTALL UPON DUCTBANK COMPLETION

2 / C1.0 PARTIAL SITE DEMOLITION & PREPARATION PLAN
SCALE: 1" = 10'

GRAPHIC SCALE

10 0 5 10 20 40

(IN FEET)
1 inch = 10 ft.

JOHNSON ROBERTS ASSOCIATES INC.
ARCHITECTS

15 PROPERZI WAY
SOMERVILLE, MA
01243 - 3228

GARCIA-GALUSKA-DESOUSA
CONSULTING ENGINEERS INC.
370 FAUNCE CORNER ROAD, DARTMOUTH, MA 02747-1317
508-998-0700 • FAX 508-998-0883 • E-MAIL info@g-g-d.com

Revisions:

CONCORD FREE PUBLIC LIBRARY EXPANSION

CONCORD, MA

Sheet Title:

Site Demolition & Preparation Plan

Date: 24-Oct-19 Drawn By: NCK

Scale: AS NOTED Project No.: 1714

C1.0

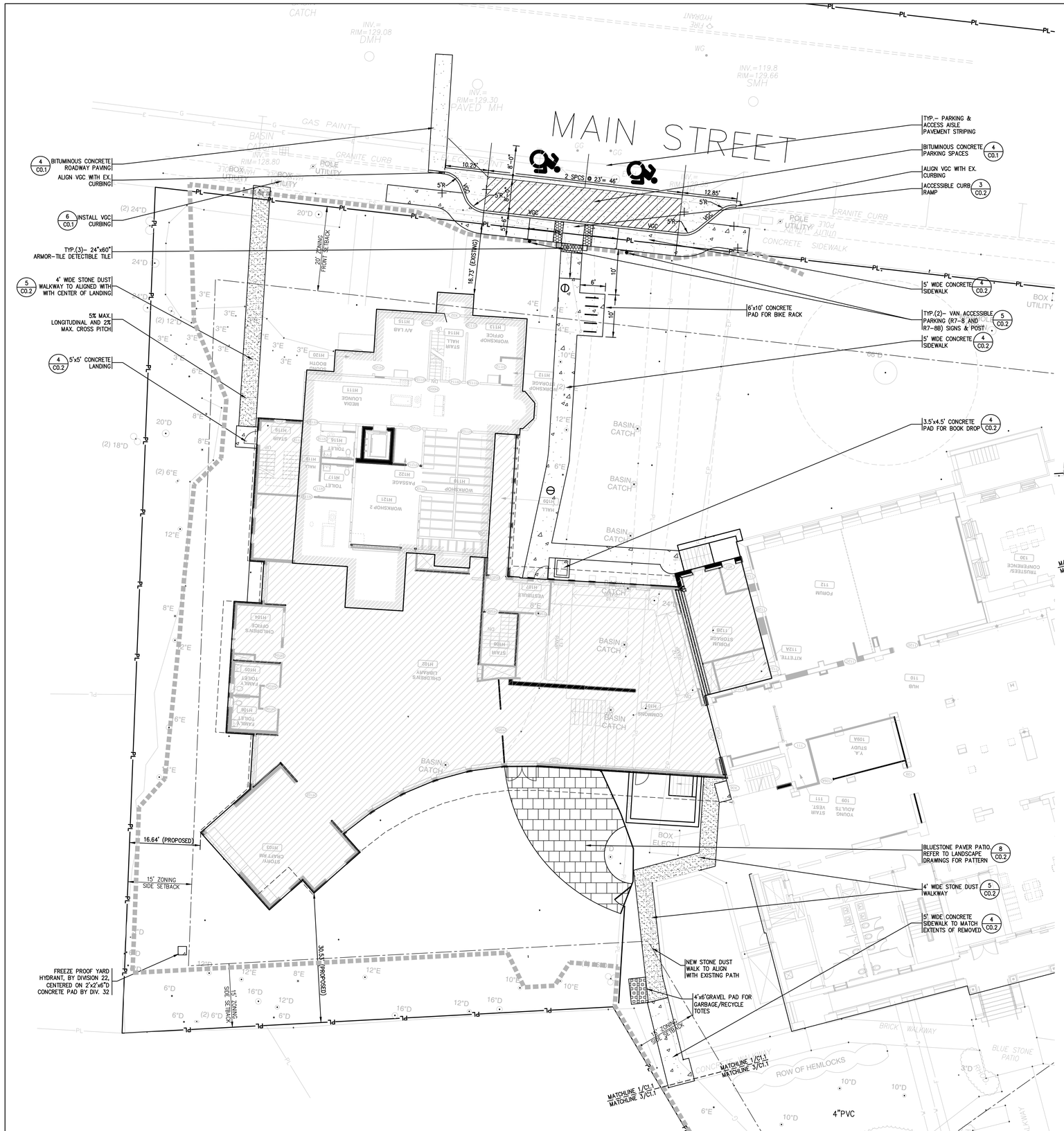

1 C1.1 SITE LAYOUT PLAN
SCALE: 1" = 10'

ZONING DIMENSION TABLE – RESIDENCE–B

USE: PUBLIC LIBRARY
MAP: 9G BLOCKS: 796 & 797

	REQUIRED OR MINIMUM	EXISTING	PROPOSED
(A) MINIMUM LOT SIZE (SF)	20,000 SF	76,693 SF	76,693 SF
(B) MINIMUM LOT FRONTAGE (FT)	125 FEET	480 FT	480 FT
(C) FRONTAGE EXCEPTION (FT)	100 FEET	N/A	N/A
(D) MINIMUM LOT WIDTH (FT)	125 FEET	480 FT	480 FT
(E) MINIMUM FRONT YARD SETBACK (FT)	20 FEET	16.73 FT	16.73 FT (EXISTING)
(F) MINIMUM SIDE YARD SETBACK (FT)	15 FEET	31.29 FT	16.64 FT
(G) MINIMUM REAR YARD SETBACK (FT)	30 FEET	29.49 FT	30.53 FT
(H) CORNER CLEARANCE (FT)	10 FEET	200± FT	200± FT
(I) MAXIMUM HEIGHT (FT)	35 FEET	46± FT	46± FT (EXISTING)
(J) MAXIMUM LOT COVERAGE (%)	NOT APPLICABLE	N/A	N/A
(K) MAXIMUM FLOOR AREA RATIO	NOT APPLICABLE	N/A	N/A

EXISTING & PROPOSED LOT COVERAGE

	EXISTING		PROPOSED – DESIGN	
	AREA	% LOT COVERAGE	AREA	% LOT COVERAGE
BUILDING (FOOTPRINT)	21,886 SF	29.30%	25,954 SF	33.84%
DRIVES, WALKS (IMPERVIOUS)	6,640 SF	8.89%	8,865 SF	11.55%
TOTAL	28,526 SF	38.19%	34,819 SF	45.39%

2 C1.1 SITE ZONING TABLE
SCALE: N.T.S.

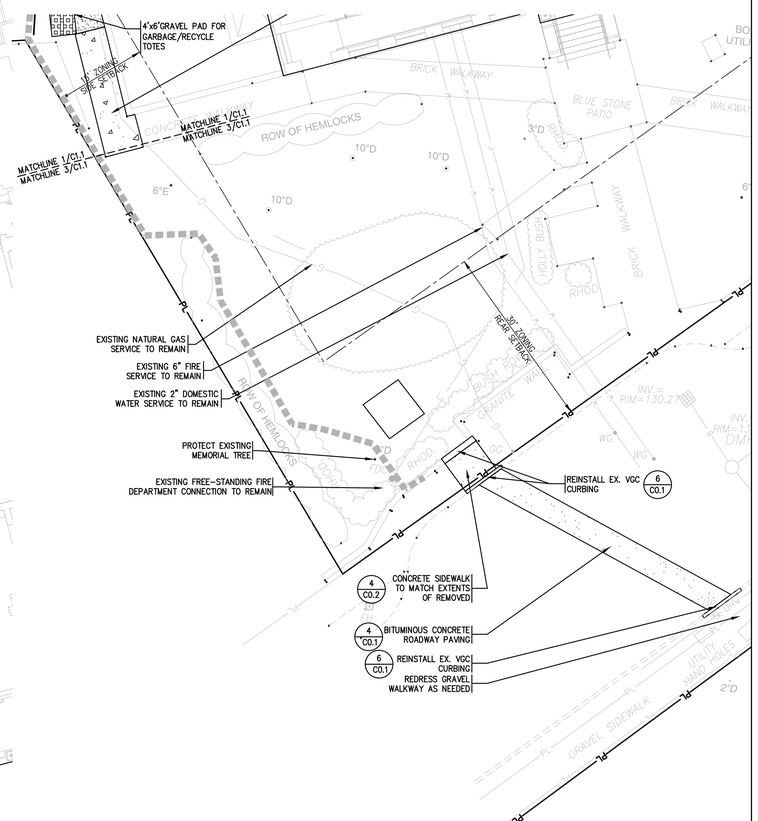

3 C1.1 PARTIAL SITE LAYOUT PLAN
SCALE: 1" = 10'

GRAPHIC SCALE
10 0 5 10 20 40
(IN FEET)
1 inch = 10 ft.

JOHNSON ROBERTS ASSOCIATES INC.
ARCHITECTS

15 PROPERZI WAY
SOMERVILLE, MA
01243 - 3228

GARCIA-GALUSKA-DESOUSA
CONSULTING ENGINEERS INC.
370 FAUNCE CORNER ROAD, DARTMOUTH, MA 02747-1217
508-998-0700 • FAX 508-998-0883 • E-MAIL info@g-g-d.com

Revisions:

CONCORD FREE PUBLIC LIBRARY EXPANSION
CONCORD, MA

Sheet Title:
Site Layout Plan

Date: 24-Oct-19 Drawn By: NCK
Scale: AS NOTED Project No.: 1714

C1.1

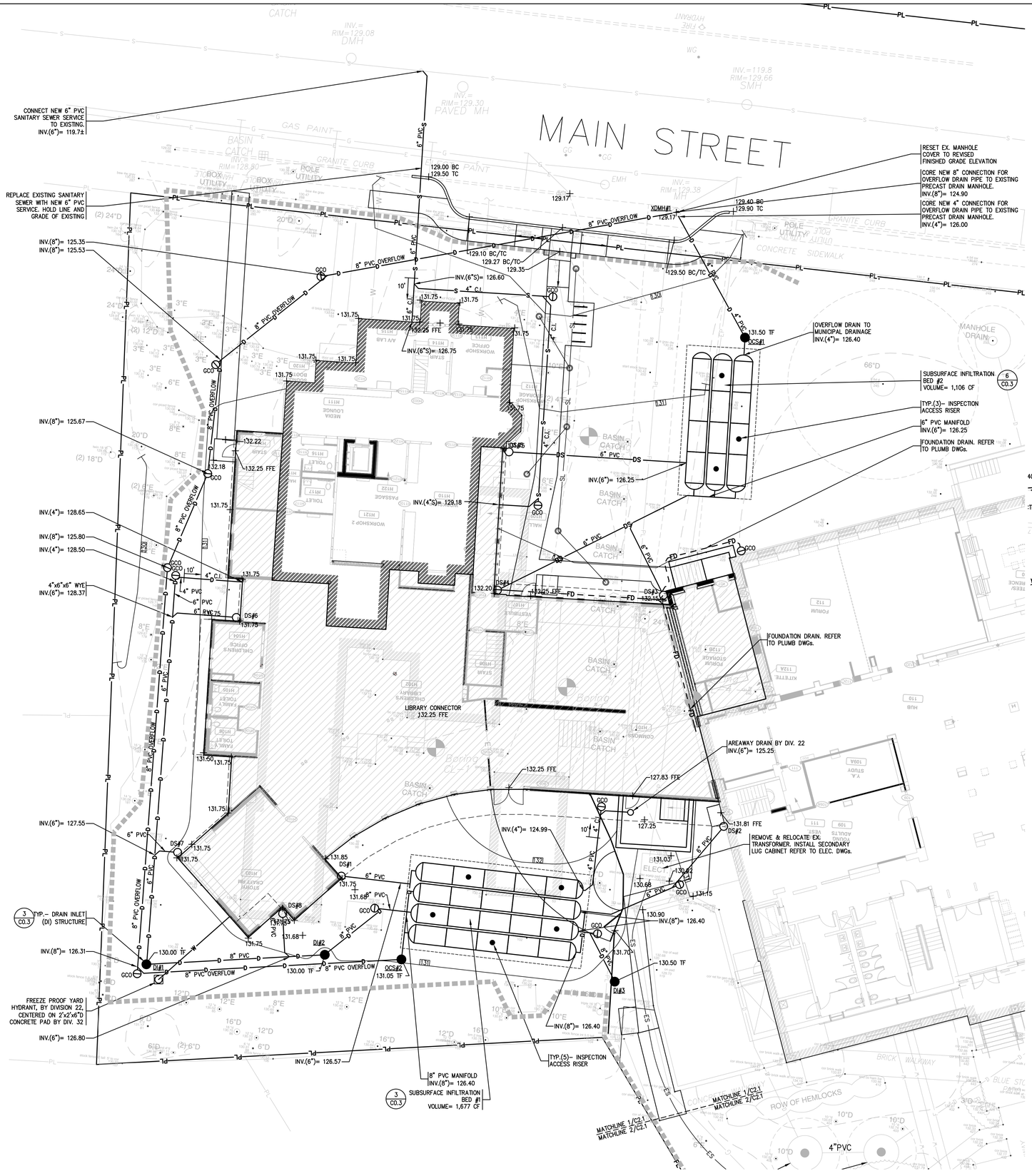

1 C2.1 SITE UTILITY & GRADING PLAN
SCALE: 1" = 10'

DOWNSPOUTS				
STRUCTURE #	FINISH GRADE	INV. OUT ELEV.	DOWNSPOUT DETAIL	REMARK
DS #1	131.75	127.20	10/C0.2	N/A
DS #2	131.81	127.00	10/C0.2	N/A
DS #3	132.25	128.75	10/C0.2	N/A
DS #4	132.20	129.50	10/C0.2	N/A
DS #5	131.75	128.85	10/C0.2	N/A
DS #6	131.75	128.79	10/C0.2	N/A
DS #7	131.75	127.69	10/C0.2	N/A
DS #8	131.75	127.20	10/C0.2	N/A

CATCH BASINS/DRAIN INLETS					
STRUCTURE #	RIM ELEV.	INV. IN ELEV.	INV. IN ELEV.	INV. OUT ELEV.	DETAIL
DI #1	130.00	127.20	——	127.10 (DI#2)	12/C0.2
DI #2	130.00	126.70	——	126.60 (SIB#1)	12/C0.2
DI #3	130.50	——	——	126.40 (SIB#1)	12/C0.2

OUTLET CONTROL STRUCTURES						
STRUCTURE #	RIM ELEV.	INV. IN ELEV.	INV. IN ELEV.	INV. IN ELEV.	INV. OUT ELEV.	DETAIL
OCS #1	131.50	126.40 (SIB#2)	——	——	126.40 (XDMH#1)	2/C0.3
OCS #2	131.05	126.65 (SIB#1)	——	——	124.90 (XDMH#1)	2/C0.3

3 C2.1 DRAINAGE STRUCTURE ELEVATION SCHEDULE
SCALE: N.T.S.

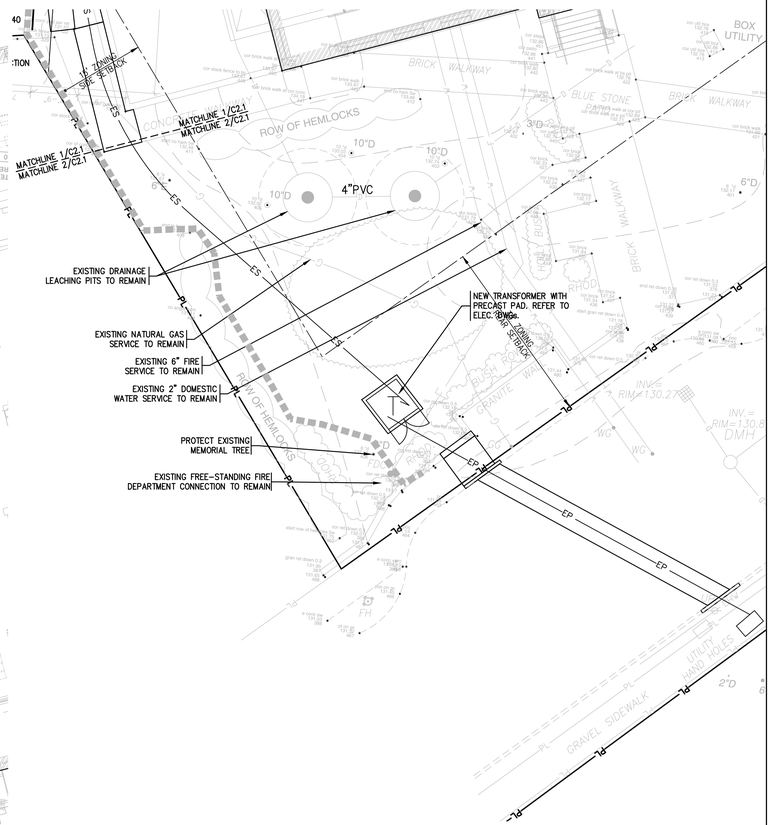

2 C2.1 PARTIAL SITE UTILITY & GRADING PLAN
SCALE: 1" = 10'
NOTE:
FURTHER SURVEY INFORMATION IS REQUIRED IN THIS AREA TO COMPLETE THE DESIGN.

GRAPHIC SCALE
10 0 5 10 20 40
(IN FEET)
1 inch = 10 ft.

JOHNSON ROBERTS ASSOCIATES INC.
ARCHITECTS
15 PROPERZI WAY
SOMERVILLE, MA
01243 - 3228

GARCIA-GALUSKA-DESOUSA
CONSULTING ENGINEERS INC.
370 FAUNCE CORNER ROAD, DARTMOUTH, MA 02747-1217
508-998-5700 • FAX 508-998-0883 • E-MAIL info@g-g-d.com

Revisions:

CONCORD FREE PUBLIC LIBRARY EXPANSION
CONCORD, MA

Sheet Title:
Site Utility & Grading Plan

Date: 24-Oct-19 Drawn By: NCK
Scale: AS NOTED Project No.: 1714

C2.1

PLANT LIST for the Concord Free Public Library Expansion, Concord, MA

Plants must be approved by landscape architect.(LA) Substitutions by LA only shall be made as needed, based on availability and condition of plant material.
The contractor is required to furnish and install plants as indicated on the Plan, and shall be placed on site under the direction of the Landscape Architect.

Symbol/Botanical Name	Common Name	No.	Size	Remarks
Deciduous Trees				
AL/Amelanchier 'Autumn Brilliance'	Autumn Brilliance Serviceberry	3	7-8'Ht multi	Full, matching;
CC/Cercis canadensis	Redbud	5	1.5-2"C	May sub/intersperse Cercis can. 'Alba'
OC/Oxydendru arboreum	Sourwood	1	2-2.5"C	Specimen shape. L.A. may sub. Acer palm. 'Bloodgood' if necessary
PR/Prunus subhirtella 'Autumnallis'	Autumn Higan Cherry	2	3-3.5"C	Matching
ST/Stewartia pseudocamilla	Japanese Stewartia	1	4-4.5"	Specimen quality
Evergreen Trees				
CO/Chamaecyparis obtusa	Hinoki Falsecypress	3	10-12'Ht	Mature height @ 40-50' x 20'width (estimated)
TH/Thuja plicata 'Virescens'	Virescens Western Arborvitae	11	10-12'Ht	Mature height @ 20-30' x 8-10 ' width (estimated)
Shrubs				
BU/Buxus microphylla 'Green Velvet'	Green Velvet Boxwood	15	2.5-3'Ht	Matching; LA may sub. another variety
CE/Cephalotaxus harringtonia 'Fastigiata'	Fastigiate Jap. Plum Yew	6	4-5'Ht	Mature height @ 8-10' x 6-8 ' width (estimated)
CS/Cornus serica 'Ivory Halo'	Ivory Halo Redtwig Dogwood	14	3-4'Ht	Full
HA/Hamamallis sp.	Witchhazel	6	4-5'Ht	L.A. may sub. Lynnwood Gold Forsythia if necessary
HY/Hydrangea quercifolia 'Pee Wee'	PeeWee Oakleaf Hydrangea	17	#7	
IG/Ilex glabra 'Shamrock'	Shamrock Inkberry	12	3-3.5'Ht	Evergreen; black berries; LA may sub. 'Compacta'
RC/Rhododendron 'Cunningham White'	Cunningham White Rhododendron	8	3-3.5'Ht	Matching; LA may sub. Kalmia lat. (Oly.Wedding) or Brower's B.
RM/Rhododendron maximum	Rosebay Rhododendron	20	4-5'Ht	Full, wide specimens
RMR/Rhododendron maximum 'Roseum'	Pink Rosebay Rhododendron	11	4-5'Ht	Full, wide specimens
RO/Rhododendron 'Olga Mezitt'	Olga Mezitt Rhododendron	6	3-3.5'Ht	
SY/Syringa vulgaris var.	Common Lilac/Varieties TBD	10	4-5'Ht	Full/LA to select var. at nursery
VC/Vaccinium coryumboseum	Highbush Blueberry	16	3-4'Ht	Mixed varieties

Symbol/Botanical Name	Common Name	No.	Size	Remarks
Groundcover/Herbaceous Plants/Grasses (Final quantity TBD)				
A/Asclepias	Milkweed	5	1 Gal	Pink/purple flowers in summer; Hummingbird attractor
DAY/Hemerocallis Stella d'Oro	Stella d'Oro Daylily	30	2 Gal	May sub. 10 'Stephanie Returns' (Peach)
Ferns: Osmunda cinnamonea	Cinnamon Fern	10	1 Gal	Hummingbird attractor
H/Heleborus	Lenten Rose	20	1 Gal	Select best available variety/"Brandywine" if available
SS/Polygonatum 'Variegatum'	Varigated Solomon's Seal	10	1 Gal	
PA/Pachysandra terminallis	Pachysandra	1000	from flats	
PE/Pennisetum al. 'Hameln'	Dwarf Fountain Grass	25	2 Gal	
VM/Vinca minor	Vinca	1000	from flats	
Bulbs—Fall planting only				
S/Scilla 'Spring Beauty'	Spring Beauty Scilla	1000	Bulbs	Random spacing/Fall planting only! Under existing Yellowwood
DAFS/Dafodils 'The Works' by White Flower Farms		100	Bulbs	Random spacing/Fall planting only, perhaps by school children

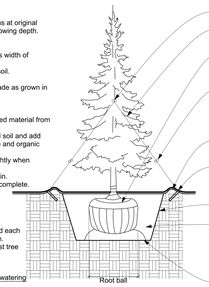

Note: Plant field dug evergreens at original north-south orientation and growing depth.

Tree Pit
Width of pit shall be three times width of rootball.
Place rootball on undisturbed soil.
Slope sides of pit and scarify.
Top of ball shall be at same grade as grown in nursery.

Planting Mix & Watering:
Backfill shall be slightly improved material from tree pit.
Break up clods and compacted soil and add minimal amounts of vermiculite and organic material if soil is poor.
Add soil gradually and tamp lightly when backfilling.
Water halfway and allow to drain.
Water thoroughly after backfill complete.

Mulch:
Place 2in. to 4in. mulch around each tree, 36in. dia. circle, minimum.
Do not place any mulch against tree trunk.

See planting Notes for mulch, watering and other requirements.

- New black 1/2in. reinforced rubber hose guard over staking wire.
- Staking wire or cable pulled carefully between branches.
- Fold back top 1/3 of burlap, and remove plastic or wire from root ball.
- U-Bolt
- 4in. temporary mound of earth around plant pit to retain water.
- Guying stake set flush with finish grade.
- Slop and scarify sides of pit.
- Prepare soil mix.(Use subsoil mixed with amendments if needed.) Compacted by lightly tamping.
- Subgrade: leave undisturbed under root ball.

1 Coniferous Tree Planting Detail
SCALE: NOT TO SCALE

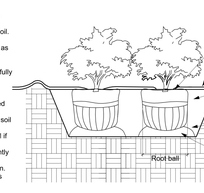

Pit for Balled or Potted Plants
Width of pit shall be three times width of root ball or container.
Place root ball on undisturbed soil.
Slope sides of pit and scarify.
Top of ball shall be same grade as grown in nursery.
Remove container from containerized material and carefully loosen outer edge of root ball.

Planting Mix & Watering:
Backfill shall be slightly improved material from pit.
Break up clods and compacted soil and add minimal amounts of vermiculite and organic material if soil is poor.
Add soil gradually and tamp lightly when backfilling.
Water halfway and allow to drain.
Water thoroughly after backfill is complete.

- Top of ball, same grade as grown in nursery.
- 2-3" Depth bark mulch .
- 3" Earth saver at pit, cut rope from trunk.
- Plant mix.
- Slope + scarify pit sides.
- Spread burlap away from ball, top 1/3 only. Remove all wire and plastic.
- Setting mound, adjust to allow top of ball to be at grade as at nursery.

2 Shrub Planting Detail
SCALE: NOT TO SCALE

Tree Pit
Width of pit shall be three times width of rootball.
Place root ball on undisturbed soil.

Slope sides of pit and scarify.

Top of ball shall be at same grade as growing in nursery.

Planting Mix & Watering:
Backfill shall be slightly improved material from tree pit.
Break up clods and compcted soil and add minimal amounts of vermiculite and organic material if soil is poor.
Add soil gradually and tamp lightly when backfilling.
Water halfway and allow to drain.
Water thoroughly after backfill complete.

Mulch:
Place 2in. to 4in. mulch around each tree, 36in. dia. circle, minimum.
Do not place any mulch against tree trunk.

See Planting Notes for mulch, watering and other requirement.

Staking:
Generally, large trees do not need staking or tree wrap. However, contractors may stake trees to protect from mowers and to provide anchorage, especially if wind is a problem.

If stakes are necessary, use 3 stakes, 6ft. to 8ft. long, driven 2ft. into ground and 1 ft. from trunk of tree. Guy material shall be wide fabric band.
Stakes should be fastened to allow some trunk movement.
Stakes & guy should be removed within 1 year of planting.

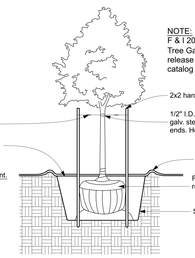

- Galv. turnbuckle, 1 per cable.
- 2x2 hardwd. stakes.
- 1/2" I.D. reinf. hose with 3/16" galv. steel cable. Clamb loose ends. Hose shall be black or dark green.
- 4in. temporary mound of earth around plant pit to retain water.
- Fold back top 1/3 of burlap, and remove plastic or wire from root ball.
- Slope and scarify sides of pit.

NOTE:
F & I 20 GAL Tree Gator Bag at all deciduous trees. Tree Gator Bag 98183, Dark Green, for slow release tree irrigation or as approved equal. Submit catalog cut for approval.

3 Deciduous Tree Planting Detail
SCALE: NOT TO SCALE

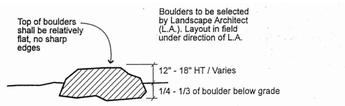

11 Section / Boulders at Reading Circle
NOT TO SCALE

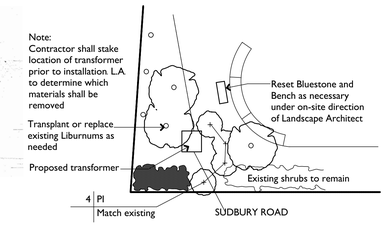

Note:
Contractor shall stake location of transformer prior to installation. L.A. to determine which materials shall be removed

Transplant or replace existing Liburnums as needed

Proposed transformer

Planting at New Transformer
NOT TO SCALE

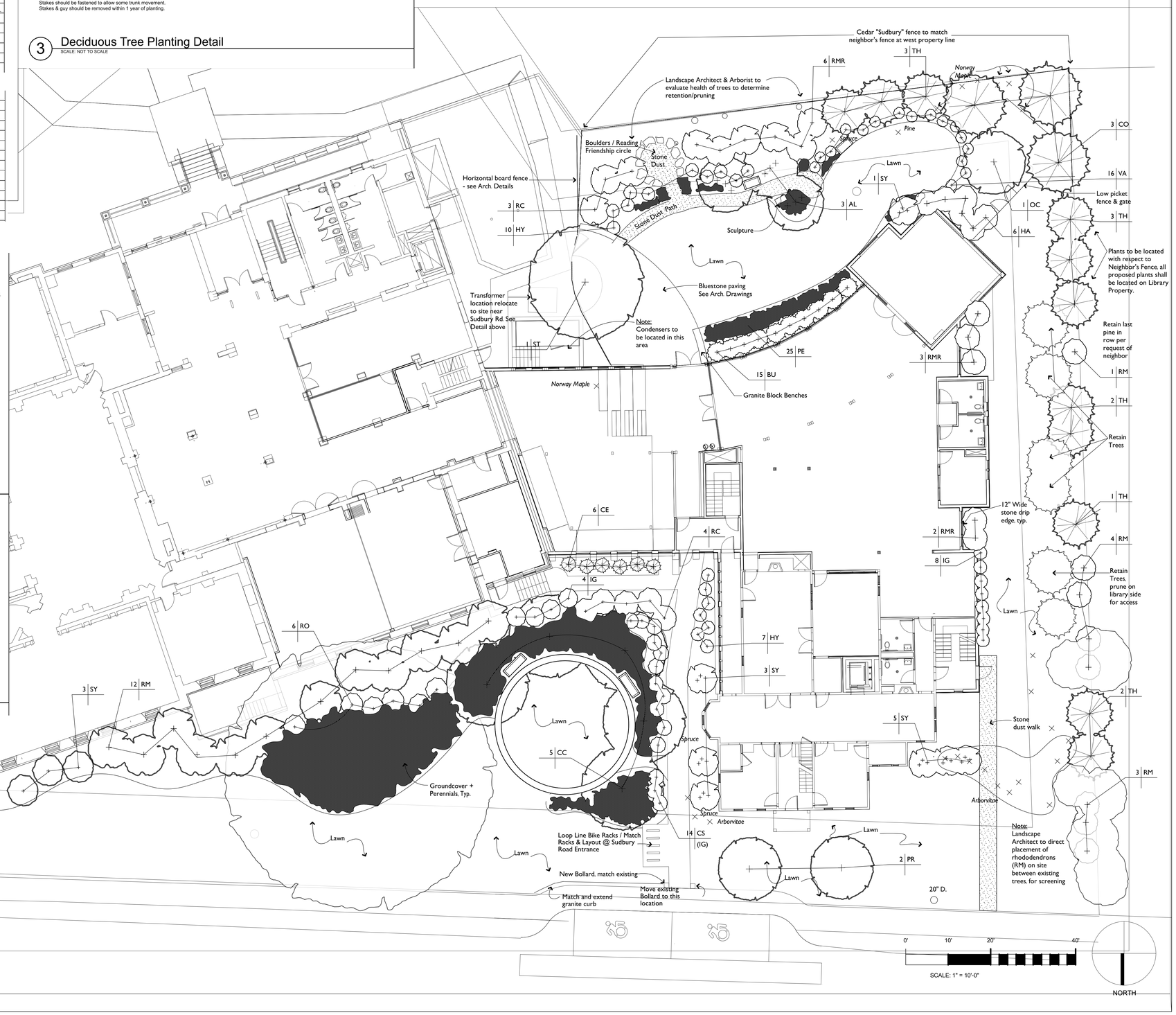

LEGEND

- Existing tree to remain / or as noted
- Existing tree to be removed
- Proposed deciduous tree or shrub
- Proposed evergreen tree or shrub
- Perennials / Groundcover
- Bench

Kim Ahern
Landscape Architects
40 Foster Street
Littleton, Massachusetts 01460
Telephone 978.486.0040
Faxsimile 978.486.0330

JOHNSON ROBERTS ASSOCIATES INC.
ARCHITECTS
15 PROPERZI WAY
SOMERVILLE, MA
01243 - 3228

GARCIA GALUSKA DESOUSA
CONSULTING ENGINEERS INC.
370 FAUNCE CORNER ROAD, DARTMOUTH, MA 02747 ¿ 1317
508 ¿ 998 ¿ 5700 ▲ FAX 508 ¿ 998 ¿ 0883 ■ ffu@ggd.com

Revisions:

CONCORD FREE PUBLIC LIBRARY EXPANSION
CONCORD, MA

Sheet Title:
LANDSCAPE PLAN

Date: 24-Oct-2019 Drawn By: KA
Scale: 1" = 10'-0" Project No.: 1714

L1.0

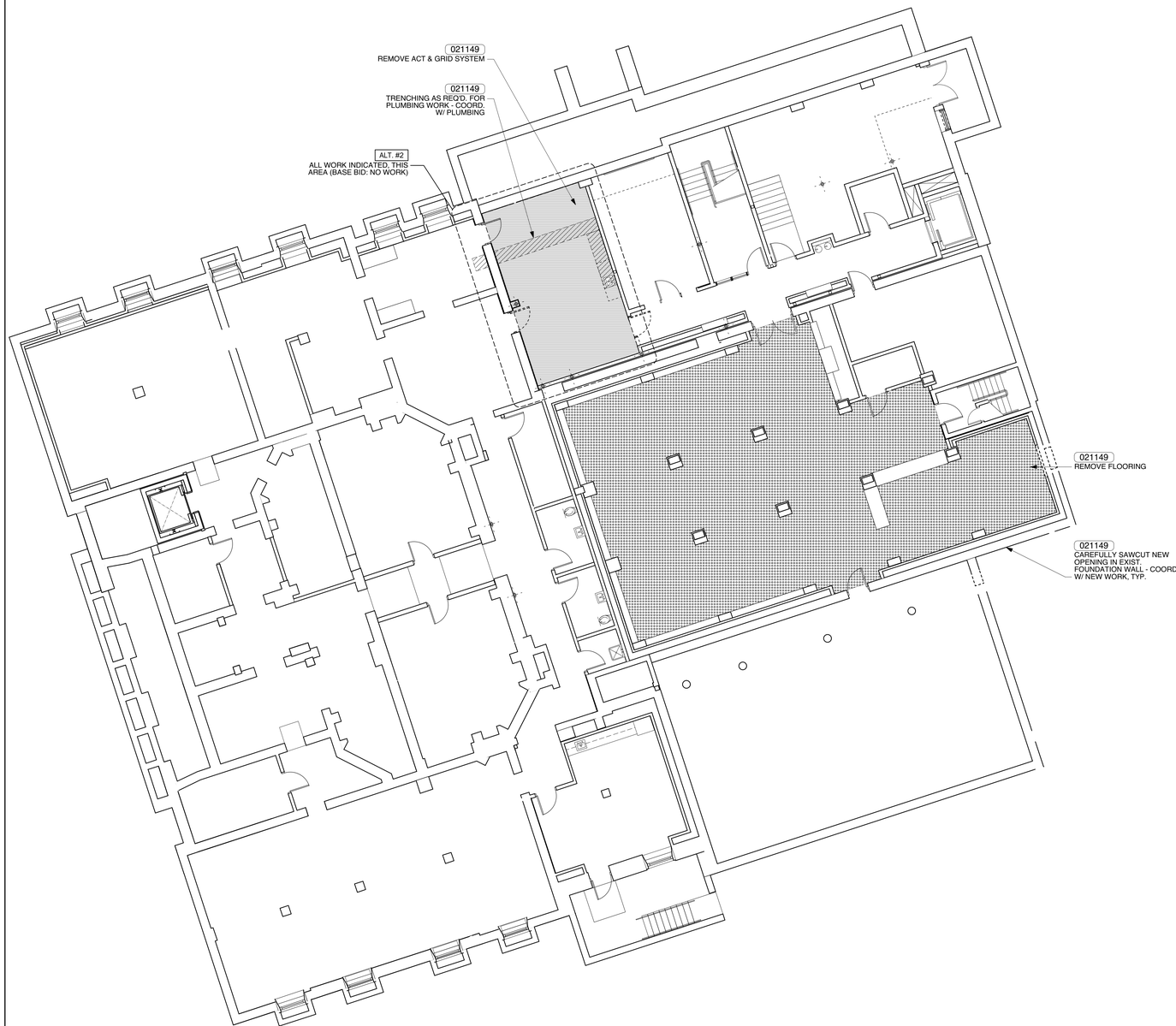

1 / D2.1 BASEMENT DEMOLITION PLAN
Scale: 1/8" = 1'-0"

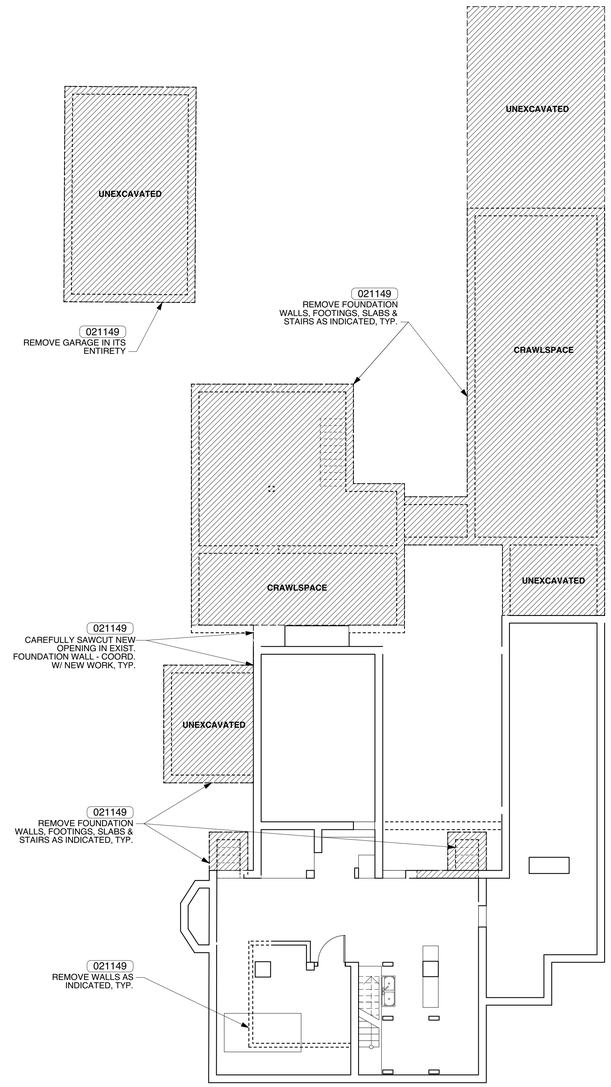

LEGEND:

- REMOVE EXISTING WALLS, FLOORS, ROOFS, FOUNDATIONS, DOORS, WINDOWS, CASEWORK & OTHER BUILDING COMPONENTS.
- EXISTING WALLS, FLOORS, ROOFS, FOUNDATIONS, DOORS, WINDOWS, CASEWORK & OTHER BUILDING COMPONENTS TO REMAIN.
- REMOVE ENTIRE SHADED PORTION OF BUILDING IN ITS ENTIRETY, INCLUDING STRUCTURAL SYSTEM, WALLS, FLOORS, ROOFS, FOUNDATIONS, DOORS, WINDOWS, STAIRS, CASEWORK, AND MEP SYSTEMS.
- REMOVE CEILING SYSTEM.
- REMOVE FLOORING

GENERAL NOTES:

1. These drawings are based on approximate field measurements and may not accurately depict the existing conditions. Verify on site.

2. During demolition activities, protect all adjacent building components.

GENERAL DEMOLITION NOTES:

A. Prior to the start of demolition work, General Contractor shall determine locations of all load bearing partitions, columns, lintels, and other items, and provide temporary supports as required by their removal or relocation. Note: If unforeseen structural elements are encountered during demolition, shore affected construction as required, and notify the Architect immediately. Refer to Specifications for additional information regarding Demolition and Removals. Refer to Civil, Architectural, Plumbing, Mechanical & Electrical Drawings for more information regarding scope of Demolition and Removals. Coord. extent of demolition with new work.

B. Furnish, install, and maintain safe conditions at all times the following:

1. Temporary protection required to ensure safety for all persons and property during demolition and removal work.

2. Cap and patch all exterior openings to provide a safe, secure and weather-tight building envelope during construction.

3. Other temporary utilities and protections as provided in the Specifications.

C. Sub-contractors shall review all demolition drawings and denote specific scopes of work to the General Contractor. General Contractor shall coordinate all demolition work with new construction.

D. General Contractor shall coordinate demolition work with all Sub-contractors prior to the start of, and during, demolition activities. Note the following:

1. Sub-contractors shall disconnect all fixtures and service for their respective trades which are indicated to be deactivated, removed, and/or which interfere with the new work, and cap service at the building source.

2. Provide all trenching, cutting or drilling for the installation of all new utilities as required.

3. Cutting of holes up to twelve inches in any dimension is to be by the respective Sub-contractor, patching of all holes and surfaces is to be by the respective trade responsible for the original surface.

4. Cutting of openings larger than twelve inches in any dimension shall be by the General Contractor. Support larger openings with loose lintels as provided in the Specifications and/or as scheduled; provide shoring and bracing as required at smaller openings.

5. All new openings in walls, ceilings and/or floors, as well as trenches in the floor slabs shall be core drilled or saw-cut.

6. Where indicated and/or required, roofing demo, including roofing and flashing system, shall be by the roofing sub-contractor.

7. Coordinate with the work of all other trades, including items to be removed and items to remain. General scope of demolition work includes:

a. The removal of existing walls, flooring, roofing, casework, doors, windows, frames, fixtures and hardware as noted, and as required by the new Work.

b. The removal of existing site and landscape equipment and elements as noted, as required by the Work. Coordinate with Civil.

c. The removal of existing plumbing fixtures and equipment as noted, and as required by the Work. Coordinate with Plumbing.

d. The removal of mechanical equipment, piping, and related hardware as noted, and as required by the Work. Coordinate with Mechanical.

e. The removal of electrical switches, wiring, fixtures, and devices as noted, and as required by the Work. Coordinate with Electrical.

f. Coordinate the removal of equipment fixtures, etc. with the capping of services by the Sub-contractors.

E. All items slated for careful removal or salvage shall be stockpiled or stored as required, undamaged, in a secure location on site.

F. Refer to C, L, A, S, P, M & E drawings, and Specifications for additional demolition work.

JOHNSON ROBERTS ASSOCIATES INC.
ARCHITECTS
15 PROPERZI WAY
SOMERVILLE, MA
02143-3228

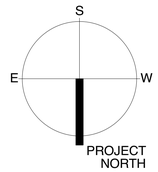

Revisions:

CONCORD FREE PUBLIC LIBRARY EXPANSION

Sheet Title:

BASEMENT DEMOLITION PLAN

Date: 24-Oct-19 Drawn By: MEB

Scale: 1/8" = 1'-0" Project No.: 1714

D2.1

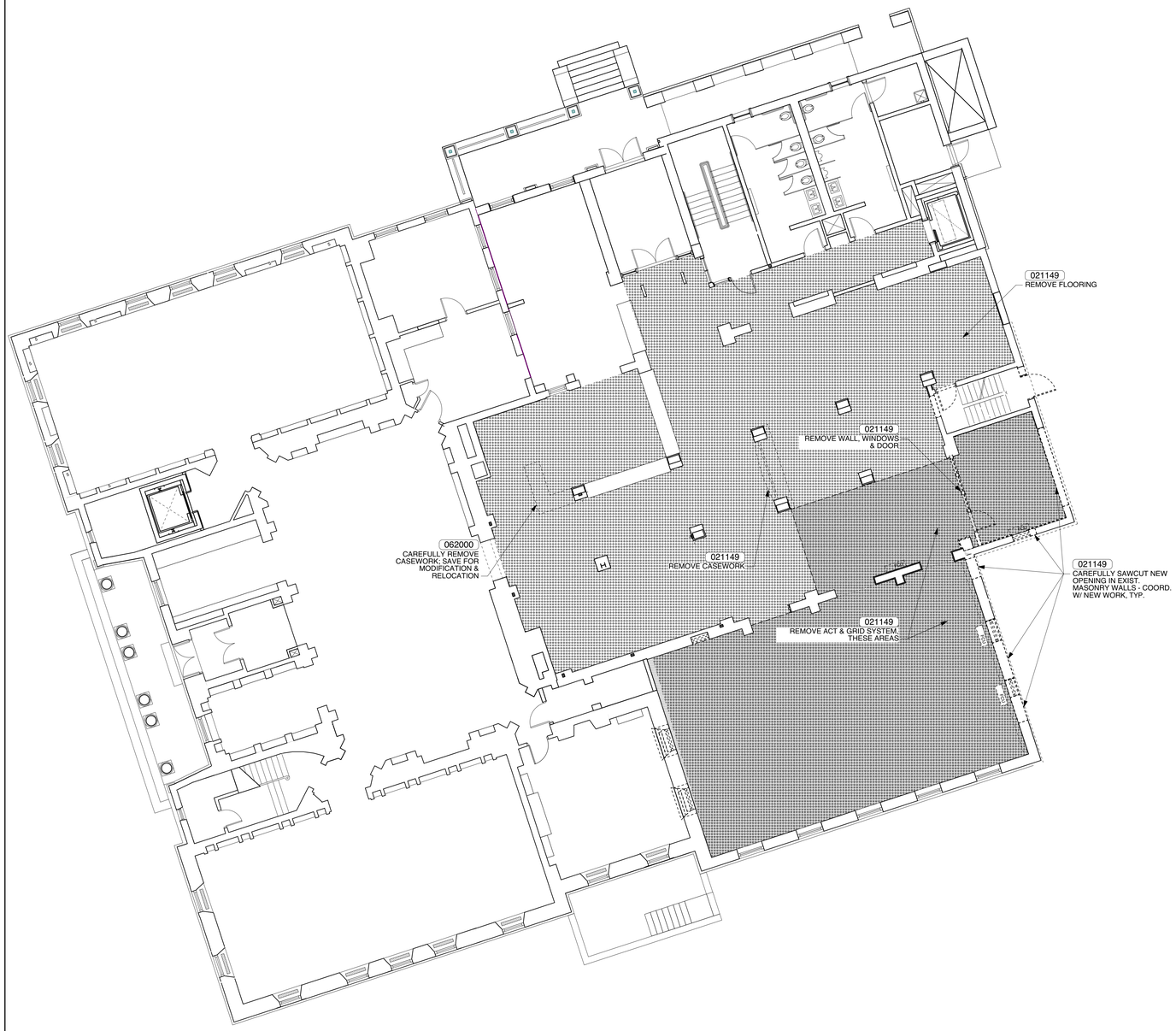

1 / D2.2 GROUND FLOOR DEMOLITION PLAN
Scale: 1/8" = 1'-0"

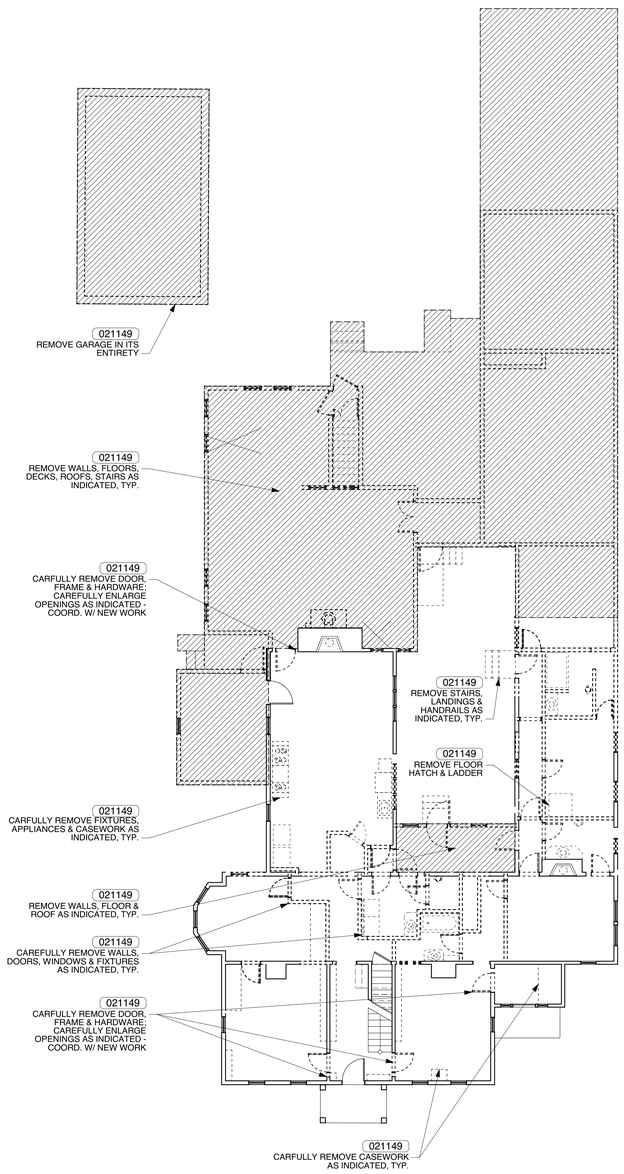

LEGEND:

- REMOVE EXISTING WALLS, FLOORS, ROOFS, FOUNDATIONS, DOORS, WINDOWS, CASEWORK & OTHER BUILDING COMPONENTS.
- EXISTING WALLS, FLOORS, ROOFS, FOUNDATIONS, DOORS, WINDOWS, CASEWORK & OTHER BUILDING COMPONENTS TO REMAIN.
- REMOVE ENTIRE SHADED PORTION OF BUILDING IN ITS ENTIRETY, INCLUDING STRUCTURAL SYSTEM, WALLS, FLOORS, ROOFS, FOUNDATIONS, DOORS, WINDOWS, STAIRS, CASEWORK, AND MEP SYSTEMS.
- REMOVE CEILING SYSTEM.
- REMOVE FLOORING

GENERAL NOTES:

1. These drawings are based on approximate field measurements and may not accurately depict the existing conditions. Verify on site.

2. During demolition activities, protect all adjacent building components.

GENERAL DEMOLITION NOTES:

A. Prior to the start of demolition work, General Contractor shall determine locations of all load bearing partitions, columns, lintels, and other items, and provide temporary supports as required by their removal or relocation. Note: If unforeseen structural elements are encountered during demolition, shore affected construction as required, and notify the Architect immediately. Refer to Specifications for additional information regarding Demolition and Removals. Refer to Civil, Architectural, Plumbing, Mechanical & Electrical Drawings for more information regarding scope of Demolition and Removals. Coord. extent of demolition with new work.

B. Furnish, install, and maintain safe conditions at all times the following:

1. Temporary protection required to ensure safety for all persons and property during demolition and removal work.

2. Cap and patch all exterior openings to provide a safe, secure and weather-tight building envelope during construction.

3. Other temporary utilities and protections as provided in the Specifications.

C. Sub-contractors shall review all demolition drawings and denote specific scopes of work to the General Contractor. General Contractor shall coordinate all demolition work with new construction.

D. General Contractor shall coordinate demolition work with all Sub-contractors prior to the start of, and during, demolition activities. Note the following:

1. Sub-contractors shall disconnect all fixtures and service for their respective trades which are indicated to be deactivated, removed, and/or which interfere with the new work, and cap service at the building source.

2. Provide all trenching, cutting or drilling for the installation of all new utilities as required.

3. Cutting of holes up to twelve inches in any dimension is to be by the respective Sub-contractor, patching of all holes and surfaces is to be by the respective trade responsible for the original surface.

4. Cutting of openings larger than twelve inches in any dimension shall be by the General Contractor. Support larger openings with loose lintels as provided in the Specifications and/or as scheduled; provide shoring and bracing as required at smaller openings.

5. All new openings in walls, ceilings and/or floors, as well as trenches in the floor slabs shall be core drilled or saw-cut.

6. Where indicated and/or required, roofing demo, including roofing and flashing system, shall be by the roofing sub-contractor.

7. Coordinate with the work of all other trades, including items to be removed and items to remain. General scope of demolition work includes:

a. The removal of existing walls, flooring, roofing, casework, doors, windows, frames, fixtures and hardware as noted, and as required by the new Work.

b. The removal of existing site and landscape equipment and elements as noted, as required by the Work. Coordinate with Civil.

c. The removal of existing plumbing fixtures and equipment as noted, and as required by the Work. Coordinate with Plumbing.

d. The removal of mechanical equipment, piping, and related hardware as noted, and as required by the Work. Coordinate with Mechanical.

e. The removal of electrical switches, wiring, fixtures, and devices as noted, and as required by the Work. Coordinate with Electrical.

f. Coordinate the removal of equipment fixtures, etc. with the capping of services by the Sub-contractors.

E. All items slated for careful removal or salvage shall be stockpiled or stored as required, undamaged, in a secure location on site.

F. Refer to C, L, A, S, P, M & E drawings, and Specifications for additional demolition work.

JOHNSON ROBERTS ASSOCIATES INC.
ARCHITECTS
15 PROPERZI WAY
SOMERVILLE, MA
02143-3228

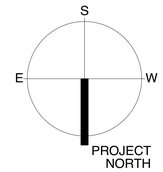

Revisions:

CONCORD FREE PUBLIC LIBRARY EXPANSION

Sheet Title:

GROUND FLOOR DEMOLITION PLAN

Date: 24-Oct-19 Drawn By: MEB

Scale: 1/8" = 1'-0" Project No.: 1714

D2.2

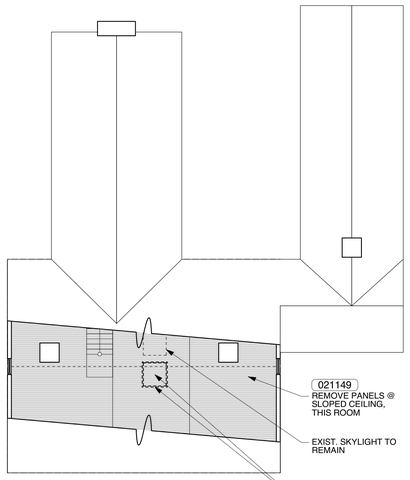

2 THIRD FLOOR DEMOLITION PLAN
Scale: 1/8" = 1'-0"

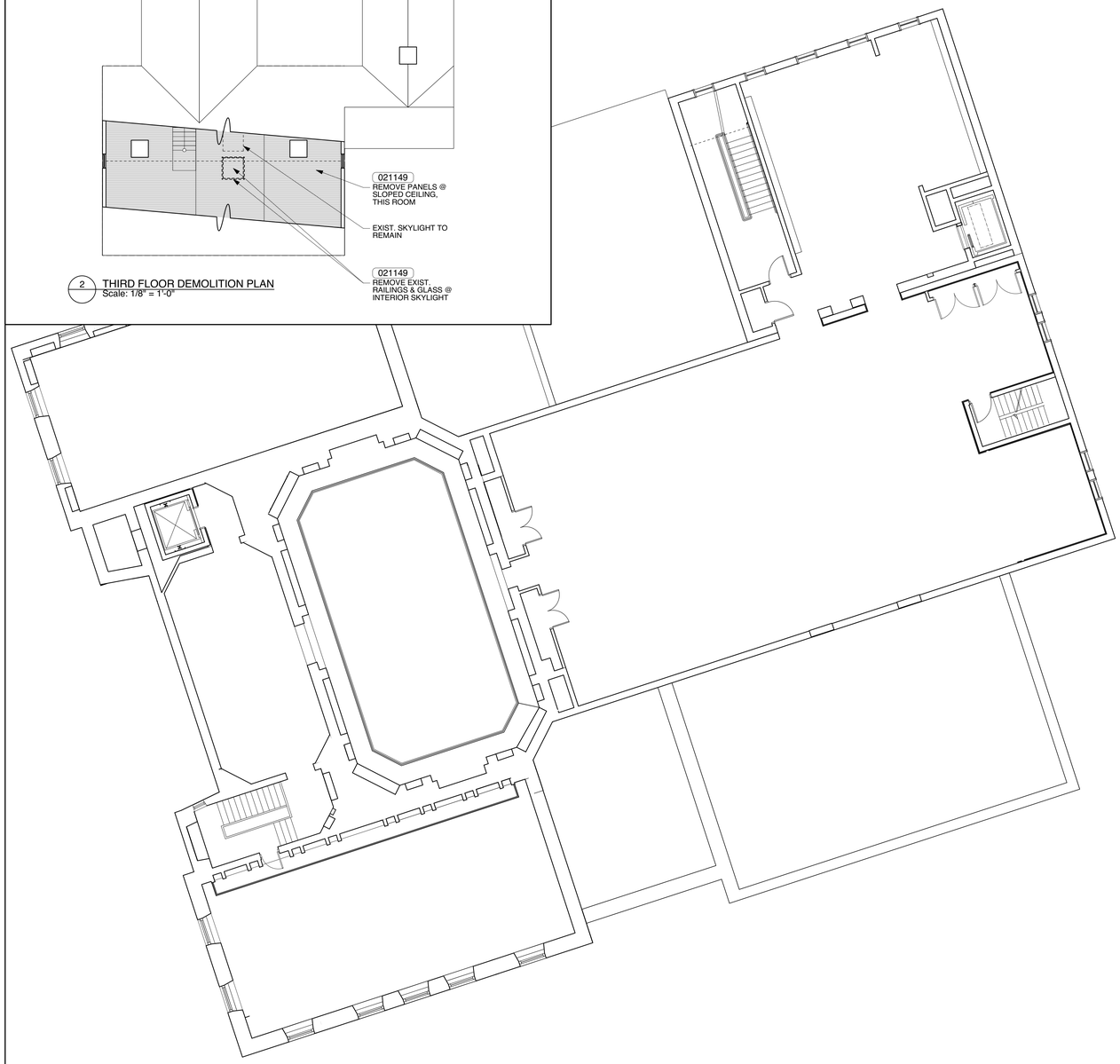

1 D2.3 SECOND FLOOR / ROOF DEMOLITION PLAN
Scale: 1/8" = 1'-0"

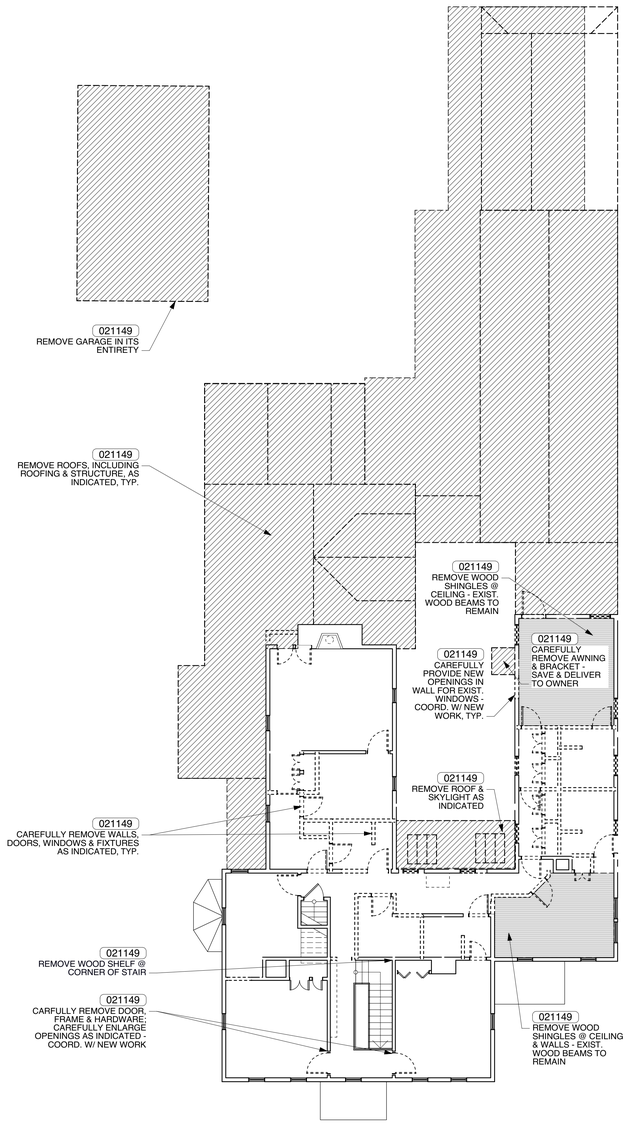

LEGEND:

- REMOVE EXISTING WALLS, FLOORS, ROOFS, FOUNDATIONS, DOORS, WINDOWS, CASEWORK & OTHER BUILDING COMPONENTS.
- EXISTING WALLS, FLOORS, ROOFS, FOUNDATIONS, DOORS, WINDOWS, CASEWORK & OTHER BUILDING COMPONENTS TO REMAIN.
- REMOVE ENTIRE SHADED PORTION OF BUILDING IN ITS ENTIRETY, INCLUDING STRUCTURAL SYSTEM, WALLS, FLOORS, ROOFS, FOUNDATIONS, DOORS, WINDOWS, STAIRS, CASEWORK, AND MEP SYSTEMS.
- REMOVE CEILING SYSTEM.
- REMOVE FLOORING

GENERAL NOTES:

1. These drawings are based on approximate field measurements and may not accurately depict the existing conditions. Verify on site.

2. During demolition activities, protect all adjacent building components.

GENERAL DEMOLITION NOTES:

A. Prior to the start of demolition work, General Contractor shall determine locations of all load bearing partitions, columns, lintels, and other items, and provide temporary supports as required by their removal or relocation. Note: If unforeseen structural elements are encountered during demolition, shore affected construction as required, and notify the Architect immediately. Refer to Specifications for additional information regarding Demolition and Removals. Refer to Civil, Architectural, Plumbing, Mechanical & Electrical Drawings for more information regarding scope of Demolition and Removals. Coord. extent of demolition with new work.

B. Furnish, install, and maintain safe conditions at all times the following:

1. Temporary protection required to ensure safety for all persons and property during demolition and removal work.

2. Cap and patch all exterior openings to provide a safe, secure and weather-tight building envelope during construction.

3. Other temporary utilities and protections as provided in the Specifications.

C. Sub-contractors shall review all demolition drawings and denote specific scopes of work to the General Contractor. General Contractor shall coordinate all demolition work with new construction.

D. General Contractor shall coordinate demolition work with all Sub-contractors prior to the start of, and during, demolition activities. Note the following:

1. Sub-contractors shall disconnect all fixtures and service for their respective trades which are indicated to be deactivated, removed, and/or which interfere with the new work, and cap service at the building source.

2. Provide all trenching, cutting or drilling for the installation of all new utilities as required.

3. Cutting of holes up to twelve inches in any dimension is to be by the respective Sub-contractor, patching of all holes and surfaces is to be by the respective trade responsible for the original surface.

4. Cutting of openings larger than twelve inches in any dimension shall be by the General Contractor. Support larger openings with loose lintels as provided in the Specifications and/or as scheduled; provide shoring and bracing as required at smaller openings.

5. All new openings in walls, ceilings and/or floors, as well as trenches in the floor slabs shall be core drilled or saw-cut.

6. Where indicated and/or required, roofing demo, including roofing and flashing system, shall be by the roofing sub-contractor.

7. Coordinate with the work of all other trades, including items to be removed and items to remain. General scope of demolition work includes:

a. The removal of existing walls, flooring, roofing, casework, doors, windows, frames, fixtures and hardware as noted, and as required by the new Work.

b. The removal of existing site and landscape equipment and elements as noted, as required by the Work. Coordinate with Civil.

c. The removal of existing plumbing fixtures and equipment as noted, and as required by the Work. Coordinate with Plumbing.

d. The removal of mechanical equipment, piping, and related hardware as noted, and as required by the Work. Coordinate with Mechanical.

e. The removal of electrical switches, wiring, fixtures, and devices as noted, and as required by the Work. Coordinate with Electrical.

f. Coordinate the removal of equipment fixtures, etc. with the capping of services by the Sub-contractors.

E. All items slated for careful removal or salvage shall be stockpiled or stored as required, undamaged, in a secure location on site.

F. Refer to C, L, A, S, P, M & E drawings, and Specifications for additional demolition work.

JOHNSON ROBERTS ASSOCIATES INC.
ARCHITECTS
15 PROPERZI WAY
SOMERVILLE, MA
02143-3228

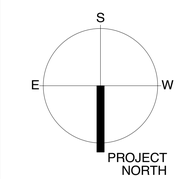

Revisions:

CONCORD FREE PUBLIC LIBRARY EXPANSION

Sheet Title:
SECOND & THIRD FLOOR DEMO PLANS

Date: 24-Oct-19 Drawn By: MEB

Scale: 1/8" = 1'-0" Project No.:1714

D2.3

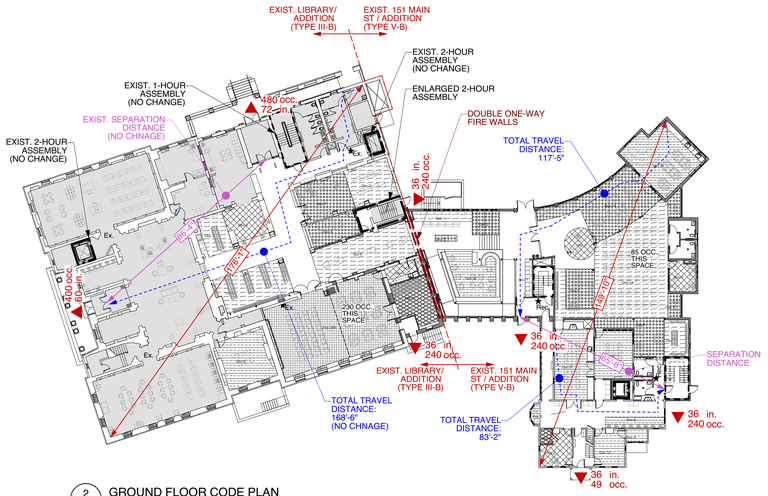

2 A1.1 GROUND FLOOR CODE PLAN
Scale: 1:300

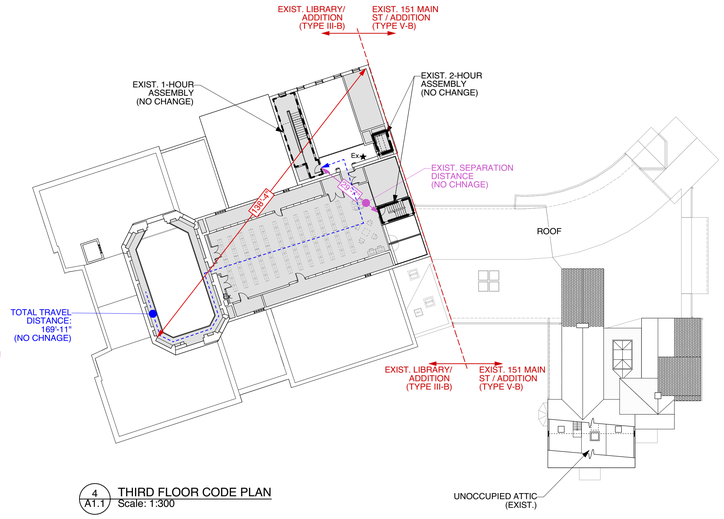

4 A1.1 THIRD FLOOR CODE PLAN
Scale: 1:300

LEGEND:

- AREAS OF EXISTING LIBRARY NOT IN SCOPE
- 1-HOUR ASSEMBLY
- 2-HOUR ASSEMBLY
- FIRE EXTINGUISHER

SEE AREA & OCCUPANCY CALCULATION BELOW FOR OCCUPANCY GROUP LEGEND.

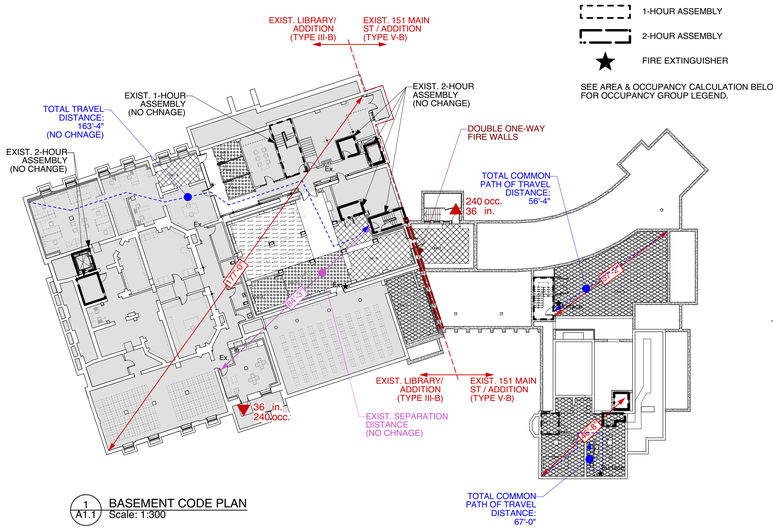

1 A1.1 BASEMENT CODE PLAN
Scale: 1:300

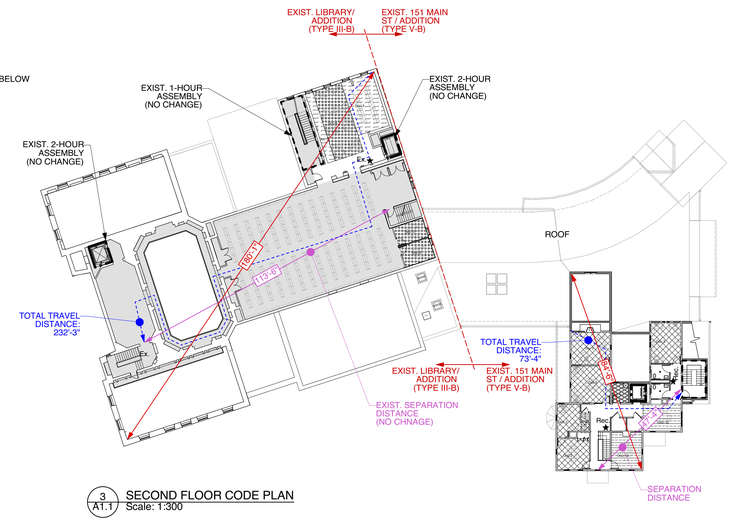

3 A1.1 SECOND FLOOR CODE PLAN
Scale: 1:300

Plumbing Fixture Count

GROUP A-3		WATER CLOSETS		URINALS	LAVATORIES EACH SEX	DRINKING FOUNTAIN	JANITOR SINK
		FEMALES	MALES				
LIBRARY	REQUIRED	1 PER 50	1 PER 100	UP TO 50% OF WC	1 PER 200	N/A	N/A
		8	4	N/A	2		
	PROVIDED*	8	2	2	4	0	0
EMPLOYEE (NON-INDUSTRIAL)	REQUIRED	1 PER 20	1 PER 25	UP TO 33% OF WC	1 PER 40	N/A	1 PER FLOOR
		1	1	N/A	1		
	PROVIDED	2	2	0	2	4	1 PER FLOOR
TOTAL	REQUIRED	9	5	0	3	N/A	1 PER FLOOR
	PROVIDED	10	4	2	6	4	1 PER FLOOR

* TOTAL FIXTURES PROVIDED INCLUDES (4) SINGLE-USER GENDER-NEUTRAL TOILET ROOMS, PER 248 CMR 10.10 (18)(r)

Area & Occupancy Calculation

	OCCUPANCY	SF/OCCUPANT	EXISTING LIBRARY		151 MAIN STREET & ADDITION		FACILITY	
			AREA	TOTAL OCCUPANTS	AREA	TOTAL OCCUPANTS	AREA	TOTAL OCCUPANTS
	ASSEMBLY CONCENTRATED	7 Net SF/Occ	1,615 SF	231	0 SF	0	1,615 SF	231
	ASSEMBLY UNCONCENTRATED	15 Net SF/Occ	1,233 SF	82	2,576 SF	172	3,809 SF	254
	READING ROOM	50 Net SF/Occ	4,574 SF	91	1,359 SF	27	5,933 SF	119
	STACKS	100 Gross SF/Occ	8,878 SF	89	1,618 SF	16	10,496 SF	105
	BUSINESS AREA	100 Gross SF/Occ	4,887 SF	49	1,394 SF	14	6,281 SF	63
	STORAGE, MECHANICAL	300 Gross SF/Occ	6,178 SF	21	2,303 SF	8	8,481 SF	28
	UNOCCUPIED	0 Gross SF/Occ	14,897 SF	0	6,348 SF	0	21,245 SF	0
Notes:								
	TOTAL		**42,262 SF**	**563 Occs**	**15,598 SF**	**237 Occs**	**57,860 SF**	**799 Occs**

BUILDING ENVELOPE REQUIREMENTS (2015 IECC)

- IECC – C301 CLIMATE ZONE 5A (Table 301.1, Middlesex County, Massachusetts)
- IECC – C402 BUILDING ENVELOPE REQUIREMENTS

  TABLES C402.1.3 / C402.1.4 (OPAQUE ELEMENTS):
  - ROOFS, ABOVE DECK – R-30ci / U-0.032
  - ROOFS, ATTIC – R-30ci / U-0.027
  - WALLS ABOVE GRADE, MASS – R-11.4ci / U-0.090
  - WALLS ABOVE GRADE, METAL FRAMED – R-13 + R-7.5ci / U-0.064
  - WALLS ABOVE GRADE, WOOD FRAMED – R-13 + R-3.8ci or R-20 / U-0.064
  - WALLS BELOW GRADE –R-7.5ci / C-0.119
  - FLOORS, MASS – R-10ci / U-0.074
  - FLOORS, FRAMED – R-30 / U-0.064
  - SLAB-ON-GRADE FLOORS, UNHEATED – R-10 for 24 in. below / F-0.54
  - SLAB-ON-GRADE FLOORS, HEATED – R-15 for 36 in. below / F-0.65
  - OPAQUE DOORS, NONSWINGING – R-4.75 / U-0.37

  TABLE C402.4 (VERTICAL FENESTRATIONS):
  - FIXED – U-0.38
  - OPERABLE – U-0.45
  - ENTRANCE DOORS – U-0.77
  - SHGC: PF < 0.2 – 0.53 SEW / 0.40 N
  - SHGC: 0.2 ≤ PF < 0.5 – 0.48 SEW / 0.58 N
  - SHGC: PF ≥ 0.5 – 0.64 SEW / 0.64 N

  TABLE C402.4 (SKYLIGHTS):
  - U-0.50
  - SHGC: 0.40
- IECC – C402.4.1.1 VERTICAL FENESTRATION MAXIMUM AREA
  40% OF GROSS ABOVE-GRADE WALL AREA, PROVIDED:
  - ≥ 50% NET FLOOR AREA WITHIN DAYLIGHT ZONE
  - DAYLIGHT RESPONSIVE CONTROLS IN DAYLIGHT ZONES
  - VISIBLE TRANSMITTANCE ≥ 1.1 TIMES SHGC
- IECC – C502.2.1 C402.4.1 REQUIREMENTS APPLY TO ADDITION ONLY

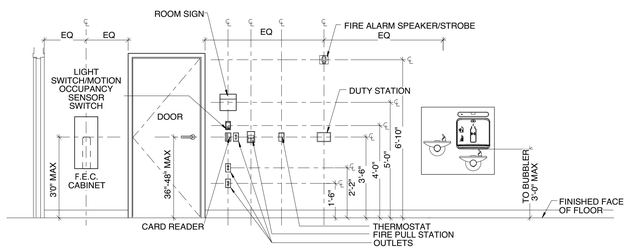

5 A1.1 TYP. MOUNTING HEIGHT DIAGRAM
Scale: 3/8" = 1'-0"

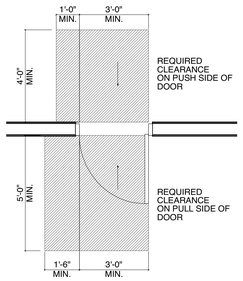

6 A1.1 TYP. DOOR CLEARANCE DIAGRAM (FRONT APPROACH)
Scale: 3/8" = 1'-0"

Code Review for Concord Free Public Library Expansion

Massachusetts State Building Code, Ninth Edition

Note 1. The Concord Free Public Library Expansion consists of two separate buildings, the "Existing Library" and "151 Main St/Addition," which are separated by a set of double one-way fire walls. Sections of this Code Review refer to the entire facility, unless otherwise noted as referring specifically to "Existing Library," "151 Main St" or "151 Main St/Addition."

Note 2. Renovations to the existing Library will be classified as a Level 2 Alteration (MA IEBC 504.1).

Note 3. Renovations at the existing building at 151 Main Street will be classified as a Historic Buiding undergoing a Change of Occupancy (MA IEBC 506.1, 508.1, and 1205.1).

Note 4. Additions to both the existing Library and House will be classified as Additions (MA IEBC 507.1).

	Requirements	Summary		Actual
303.1	USE GROUP	ASSEMBLY GROUP A-3 (NO CHANGE AT EXISTING LIBRARY)		LIBRARY
501.2	ADDRESS	PROVIDE APPROVED ADDRESS IDENTIFICATION		PROVIDED
504.3 TABLE	ALLOWABLE HEIGHT	EXISTING LIBRARY: FULLY SPRINKLERED, A-3 / TYPE III-B	75 FT	50 FT
		151 MAIN ST/ADDITION: FULLY SPRINKLERED, A-3 / TYPE V-B	60 FT	28 FT
504.4 TABLE	ALLOWABLE STORIES	EXISTING LIBRARY: 3 STORIES, FULLY SPRINKLERED, A-3 / TYPE III-B	3 STORIES	3 STORIES
		151 MAIN ST/ADDITION: 2 STORIES, FULLY SPRINKLERED, A-3 / TYPE V-B	2 STORIES	2 STORIES
506.2 TABLE	ALLOWABLE AREA (INCL. FRONTAGE INCREASE)	EXISTING LIBRARY: FULLY SPRINKLERED, A-3 / TYPE III-B	99,750 SF	42,262 SF GROSS
		151 MAIN ST/ADDITION: FULLY SPRINKLERED, A-3 / TYPE V-B	39,600 SF	15,598 SF GROSS
509 TABLE	INCIDENTAL USES	BOILER ROOM - 1HR OR AUTOMATIC SPRINKLER SYSTEM		SPRINKLERED
601 TABLE	FIRE-RESISTANCE OF BUILDING ELEMENTS	EXISTING LIBRARY: PRIMARY STRUCTURAL FRAME	0 HR	COMPLIANT
		151 MAIN ST/ADDITION: PRIMARY STRUCTURAL FRAME	0 HR	COMPLIANT
		EXISTING LIBRARY: BEARING WALLS	2 HR	COMPLIANT
		151 MAIN ST/ADDITION: BEARING WALLS	0 HR	COMPLIANT
		EXISTING LIBRARY: NONBEARING WALLS	0 HR	COMPLIANT
		151 MAIN ST/ADDITION: NONBEARING WALLS	0 HR	COMPLIANT
		EXISTING LIBRARY: FLOOR CONSTRUCTION	0 HR	COMPLIANT
		151 MAIN ST/ADDITION: FLOOR CONSTRUCTION	0 HR	COMPLIANT
		EXISTING LIBRARY: ROOF CONSTRUCTION	0 HR	COMPLIANT
		151 MAIN ST/ADDITION: ROOF CONSTRUCTION	0 HR	COMPLIANT
602 TABLE	FIRE RESISTANCE BASED ON FIRE SEPARATION	EXISTING LIBRARY: FIRE SEPARATION DISTANCE = FSD (feet)	III-B, 0 HR, FSD X > 30 FT	COMPLIANT
		151 MAIN ST/ADDITION: FIRE SEPARATION DISTANCE = FSD (feet)	V-B, 0 HR, FSD 10 < X < 30 FT	COMPLIANT
705.2	PROJECTIONS	PROJECTIONS FROM EXTERIOR WALLS ALLOWED OF ANY APPROVED MATERIAL, NOT LESS THAN 24 IN PLUS 8 IN PER FOOT OF FSD FROM LINE USED TO DETERMINE FSD	>/= 24 IN PLUS 8 IN PER FOOT	COMPLIANT
705.8 TABLE	OPENINGS	UNPROTECTED, SPRINKLERED; 15 < FSD < 20 FT	75%	COMPLIANT
		UNPROTECTED, SPRINKLERED; FSD > 20 FT	NO LIMIT	COMPLIANT
706.1	FIRE WALL	EACH PORTION OF A BUILDING SEPARATED BY FIRE WALLS SHALL BE CONSIDERED A SEPARATE BUILDING. FIRE WALLS SHALL PROVIDE COMPLETE SEPARATION.		EXISTING LIBRARY & 151 MAIN ST/ADDITION = SEPARATE BUILDINGS
706.2	FIRE WALL STABILITY	DOUBLE ONE-WAY FIRE WALLS SEPARATING EXISTING LIBRARY FROM 151 MAIN STREET/ADDITION DESIGNED IN ACCORDANCE WITH NFPA 221 ARE ALLOWED		COMPLIANT
706.3	FIRE WALL MATERIALS	FIRE WALLS SHALL BE CONSTRUCTED OF ANY APPROVED NON-COMBUSTIBLE MATERIAL; COMBUSTIBLE MATERIALS ALLOWED AT TYPE V CONSTRUCTION.		COMPLIANT
706.4 TABLE	FIRE WALL FIRE-RESISTANCE	EXISTING LIBRARY: A-3, TYPE III-B	3 HR	3 HR
		151 MAIN ST/ADDITION: A-3, TYPE V-B	2 HR	3 HR
7.035e+02	FIRE WALL HORIZONTAL CONTINUITY	FIRE WALLS MAY TERMINATE AT INSIDE FACE OF NONCOMBUSTIBLE EXTERIOR SHEATHING WHERE BUILDING ON BOTH SIDES OF FIRE WALLS ARE PROTECTED BY AN AUTOMATIC SPRINKLER SYSTEM.		COMPLIANT
706.5.1-1.	EXTERIOR WALLS AT FIRE WALLS	EXTERIOR WALLS ON BOTH SIDES OF FIRE WALLS SHALL HAVE A 1-HOUR FIRE RESISTANCE RATING, EXTENDING 4' ON EACH SIDE OF THE FIRE WALL	1 HR WALL	COMPLIANT
706.5.2	PROJECTIONS AT FIRE WALL	EXTERIOR WALLS ON BOTH SIDES OF FIRE WALLS SHALL HAVE A 1-HOUR FIRE RESISTANCE RATING, EXTENDING 4' ON EACH SIDE OF THE FIRE WALL	1 HR WALL	COMPLIANT
706.6.-4.	FIRE WALL VERTICAL CONTINUITY	FIRE WALLS MAY TERMINATE AT UNDERSIDE OF COMBUSTIBLE ROOF SHEATHING OR DECKS, IF THERE ARE NO OPENINGS WITHIN 4' OF FIRE WALLS, ROOF COVERING IS CLASS BE MINIMUM, AND SHEATHING OR DECK IS CONSTRUCTED OF FIRE-RETARDANT TREATED WOOD FOR NOT LESS THAN 4' ON BOTH SIDES OF FIRE WALLS.		COMPLIANT
706.6.1	STEPPED BUILDINGS AT FIRE WALL	LOWER FIRE WALL MAY TERMINATE AT UNDERSIDE OF ROOF SHEATHING OR DECK, IF LOWER ROOF ASSEMBLY WITHIN 10' OF FIRE WALL AND ENTIRE LENGTH AND SPAN OF SUPPORTING ELEMENTS HAS A 1 HOUR FIRE-RESISTANCE RATING, AND THERE ARE NO OPENINGS IN LOWER ROOF WITHIN 10' OF FIRE WALLS; OTHERWISE FIRE WALLS SHALL EXTEND 30" ABOVE ROOF		COMPLIANT
716.5 TABLE	OPENING FIRE PROTECTION	FIRE WALLS	3 HR WALL: 3 HR DOORS	COMPLIANT
			2 HR WALL: 1 1/2 HR DOORS	COMPLIANT
		OTHER FIRE PARTITIONS (RATED ROOMS)	1 HR WALL: 3/4 HR DOOR	COMPLIANT
801.6	INTERIOR FINISHES	COMBUSTIBLE MATERIALS ALLOWED FOR FINISH WALLS, CEILINGS, FLOORS AND OTHER INTERIOR SURFACES.		COMPLIANT
803.11 TABLE	INTERIOR FINISHES BASED ON GROUP	ROOMS AND ENCLOSED SPACES (SPECIFIC OCCUPPANCY A GOVERNING FACTOR IN DETERMINING APPLICABLE REQUIREMENTS)	CLASS C	COMPLIANT
903.2.1.3	GROUP A-3	AUTOMATIC SPRINKLER SYSTEM SHALL BE PROVIDED		COMPLIANT
907.2.1	GROUP A-3	FIRE ALARM SYSTEM SHALL BE PROVIDED		COMPLIANT
1003.2	CEILING HEIGHT	MINIMUM HEIGHT ALLOWED: 7'-6"		COMPLIANT
1004.3	POSTING OF OCCUPANT LOAD	ASSEMBLY OCCUPANCY ROOMS/SPACES - POST OCCUPANT LOAD NEAR MAIN EXIT		INCLUDED ON ROOM SIGNS
1005.3.2	MEANS OF EGRESS CAPACITY	ALLOW 0.2" PER OCCUPANT (EACH 36-INCH WIDE DOOR HAS 180-OCCUPANT CAPACITY)		SHOWN ON CODE PLAN
1006.2	EGRESS FROM SPACES	SPACES WITH ONE EXIT: 49 OCCUPANTS MAXIMUM., 75 FT MAXIMUM COMMON PATH OF EGRESS		COMPLIANT
1006.3.1 TABLE	MINIMUM NUMBER OF EXITS	1-500 OCCUPANTS PER STORY = 2 EXITS MINIMUM	2 EXITS PER BLDG	5 EXITS PER BLDG PROVIDED
1009.1	ACCESSIBLE MEANS OF EGRESS	2 ACCESSIBLE MEANS OF EGRESS REQUIRED	2 EXITS PER BLDG	2 EXITS PER BLDG PROVIDED
1009.2	CONTINUITY	ACCESSIBLE MEANS OF EGRESS SHALL BE CONTINUOUS TO A PUBLIC WAY		COMPLIANT
1010.1.1	SIZE OF DOORS	MINIMUM WIDTH - 32 INCHES, MAXIMUM WIDTH OF SWINGING DOOR LEAF - 48 INCHES; MINIMUM HEIGHT - 80 INCHES		COMPLIANT
1017.2	TRAVEL DISTANCE	EXIT ACCESS TRAVEL DISTANCE - 250 FEET MAXIMUM		COMPLIANT
1019.3 / 1023.2	STAIRWAYS	STAIRWAYS SHALL BE LOCATED IN EXIT ENCLOSURES WITH A 1-HOUR FIRE-RESISTANCE RATING; STAIRWAYS BETWEEN ONLY TWO STORIES MAY BE UNENCLOSED		COMPLIANT
1028	EXIT DISCHARGE	NOT MORE THAN 50% OF THE REQUIRED CAPACITY OF INTERIOR EXIT STAIRWAYS MAY EGRESS THROUGH UNENCLOSED THE LEVEL OF DISCHARGE OR VESTIBULES		COMPLIANT
1029.15	STEPPED AISLE	HANDRAILS SHALL BE PROVIDED ON 1 SIDE OF STEPPED AISLE (COMMONS SEATING)		COMPLIANT
IEBC 201	HISTORIC BUILDING	151 MAIN ST: LISTED ON THE NATIONAL REGISTER OF HISTORIC BUILDINGS		HISTORIC BLDG
IEBC 506.1	CHANGE OF OCC	151 MAIN ST: CHANGE OF OCCUPANCY FROM R-3 TO A-3		CHANGE OF OCC
IEBC 1012.4.1	HISTORIC BUILDING EXISTING STAIRWAYS	151 MAIN ST: EXISTING STAIRWAYS NOT COMPLYING WITH MAXIMUM RISER HEIGHT AND MINIMUM TREAD DEPTH REQUIREMENTS, MAY REMAIN WHERE THE PITCH OR SLOPE CANNOT BE REDUCED WITHIN EXISTING SPACE, WITH APPROVAL OF AHJ		EXIST. STAIWAYS TO REMAIN
IEBC 1203.9	HISTORIC BUILDING EXISTING HANDRAILS	151 MAIN ST: EXISTING HANDRAILS AND GUARDRAILS AT ALL EXISTING STAIRWAYS SHALL BE PERMITTED TO REMAIN		EXIST. HANDRAILS TO REMAIN
IEBC 1205.1	HISTORIC BLDG UNDERGOING CHANGE OF OCC	151 MAIN ST: EXEMPTED FROM CERTAIN REQUIREMENTS (LISTED BELOW) OF A CHANGE IN OCCUPANCY		HISTORIC BLDG UNDERGOING CHANGE OF OCC
IEBC 1205.6	HISTORIC BUILDING EXISTING MEANS OF EGRESS	151 MAIN ST: EXISTING DOOR OPENINGS, AND CORRIDOR AND STAIRWAY WIDTHS LESS THAN THOSE REQUIRED FOR A-3 OCCUPANCY MAY REMAIN, WITH APPROVAL OF AHJ		EXIST. MEANS OF EGRESS WIDTHS TO REMAIN
IEBC 1205.7	HISTORIC BUILDING EXISTING FRONT DOOR SWING	151 MAIN ST: EXISTING FRONT DOOR MAY REMAIN INSWINGING (NOT SWING IN DIRECTION OF EXIT TRAVEL), WITH APPROVAL OF AHJ		EXIST. FRONT DOOR SWING TO REMAIN
IEBC 1205.9	HISTORIC BUILDING INTERIOR FINISHES	151 MAIN ST: EXISTING NON-CONFORMING FINISHES THAT ARE HISTORIC IN NATURE MAY REMAIN		EXIST. HISTORIC FINISHES TO REMAIN
IEBC 1205.15	HISTORIC BUILDING ACCESSIBILITY	151 MAIN ST: EXISTING ELEMENTS SHALL COMPLY WITH 521 CMR EXCEPT WHERE TECHNICALLY INFEASIBLE OR WHERE COMPLIANCE THREATENS HISTORIC NATURE		COMPLIANT
IEBC 1206.1	HISTORIC BUILDING STRUCTURE	151 MAIN ST: EXISTING STRUCTURE MAY BE ACCEPTED BY AHJ, WITH OPERATIONAL CONTROLS TO LIMIT LIVE LOAD		OCCUPANCY LIMIT TO BE POSTED
IECC 402.5.7	VESTIBULES	VESTIBULES SHALL BE REQUIRED AT ALL ENTRANCE DOORS INTENDED FOR PUBLIC USE, OPENING TO SPACE > 3,000 SF		COMPLIANT

JOHNSON ROBERTS ASSOCIATES INC.
ARCHITECTS
15 PROPERZI WAY
SOMERVILLE, MA
02143-3228

Revisions:

CONCORD FREE PUBLIC LIBRARY EXPANSION

Sheet Title:

CODE PLANS

Date: 24-Oct-19 Drawn By: MEB

Scale: As Noted Project No.: 1714

A1.1

NOTES:

1. ACCOUSTICAL SEALANT, TYP. @ HEAD & BASE SECTIONS OF WALL PARTITIONS

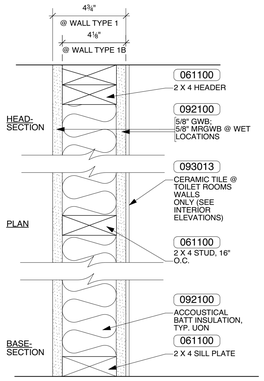

1 2 X 4 WOOD STUD WALL SYSTEM

1B 2 X 4 WOOD STUD - GWB ONE SIDE ONLY

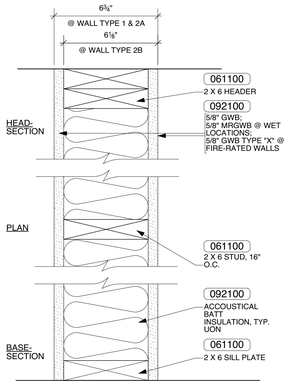

2 2 X 6 WOOD STUD WALL SYSTEM

2A 2 X 6 WOOD STUD 1-HR RATED WALL SYSTEM
UL DES No U379

2B 2 X 6 WOOD STUD WALL SYSTEM - GWB ONE SIDE ONLY

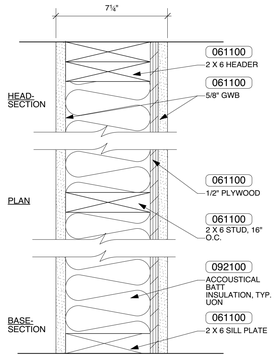

3 2 X 6 WOOD STUD WALL SHEAR WALL SYSTEM

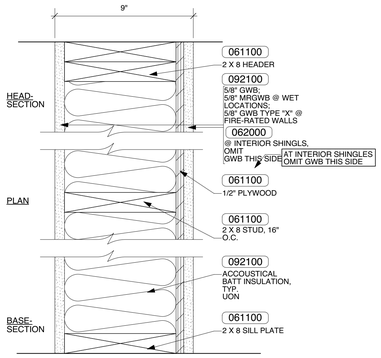

4 2 X 8 WOOD STUD 1-HR RATED SHEAR WALL SYSTEM
UL DES No 344 (SIM.)

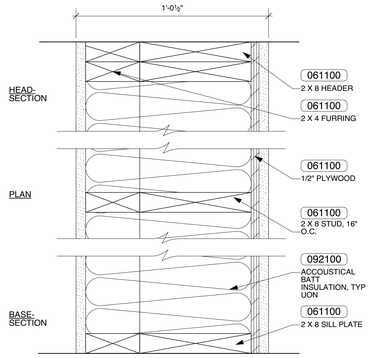

5 2 X 4 & 2 X 8 WOOD STUD WALL SHEAR WALL SYSTEM

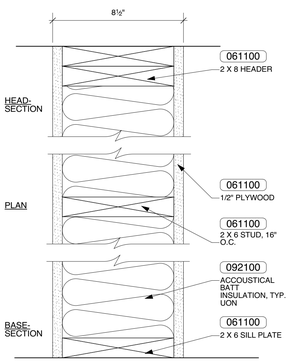

6 2 X 8 WOOD STUD WALL SYSTEM

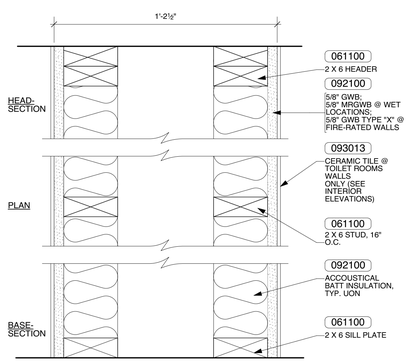

7 2 X 4 WOOD STUD CHASE WALL SYSTEM

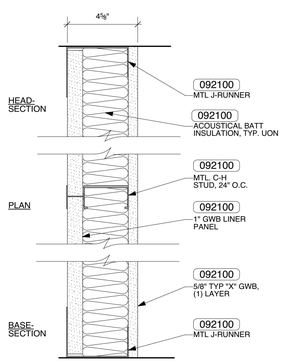

8 1HR SHAFT WALL SYSTEM
UL Des No U415

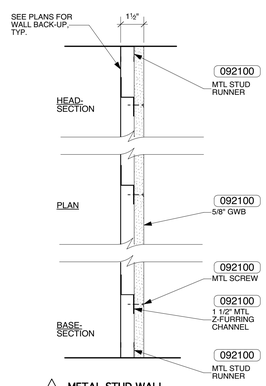

9 METAL STUD WALL

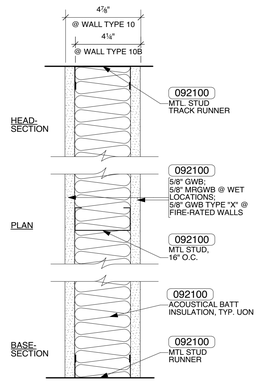

10 3 5/8" MTL STUD WALL SYSTEM

10A 3 5/8" MTL STUD 1-HR RATED
UL DES No 419 WALL SYSTEM

10B 3 5/8" MTL STUD WALL SYSTEM - GWB ONE SIDE ONLY

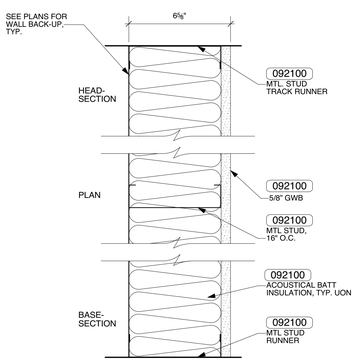

11 6" MTL STUD WALL SYSTEM - GWB ONE SIDE ONLY

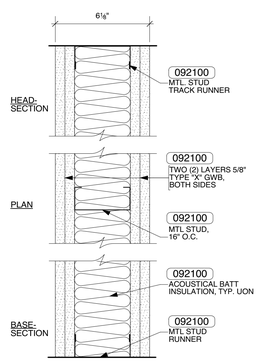

12 3 5/8" MTL STUD 2-HR RATED
UL DES No U419 WALL SYSTEM

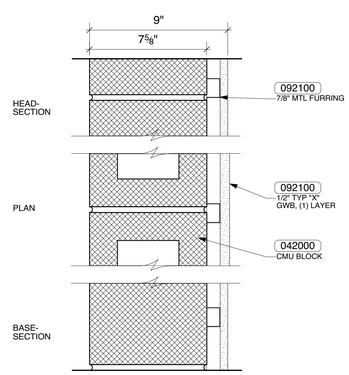

13 8"x16"x8" CMU WALL 2-HR RATED WALL SYSTEM
UL DES No U914

13A 8"x16"x8" CMU WALL 2-HR RATED WALL SYSTEM - NO FURRING
UL DES No U905

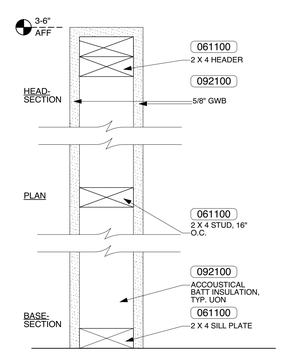

14 2 X 4 WOOD STUD HALF WALL SYSTEM

1 / A1.2 INTERIOR PARTITION TYPES
Scale: 3" = 1'-0"

JOHNSON ROBERTS ASSOCIATES INC.
ARCHITECTS
15 PROPERZI WAY
SOMERVILLE, MA
02143-3228

Revisions:

CONCORD FREE PUBLIC LIBRARY EXPANSION

Sheet Title:

WALL TYPES

Date: 24-Oct-19 Drawn By: MEB

Scale: Project No.: 1714

A1.2

DATUM:

T.O.F.F. AT EXISTING HOUSE
GROUND FLOOR = 0'-0"

T.O.F.F. AT EXISTING LIBRARY
GROUND FLOOR = 4'-7 1/2" - VIF

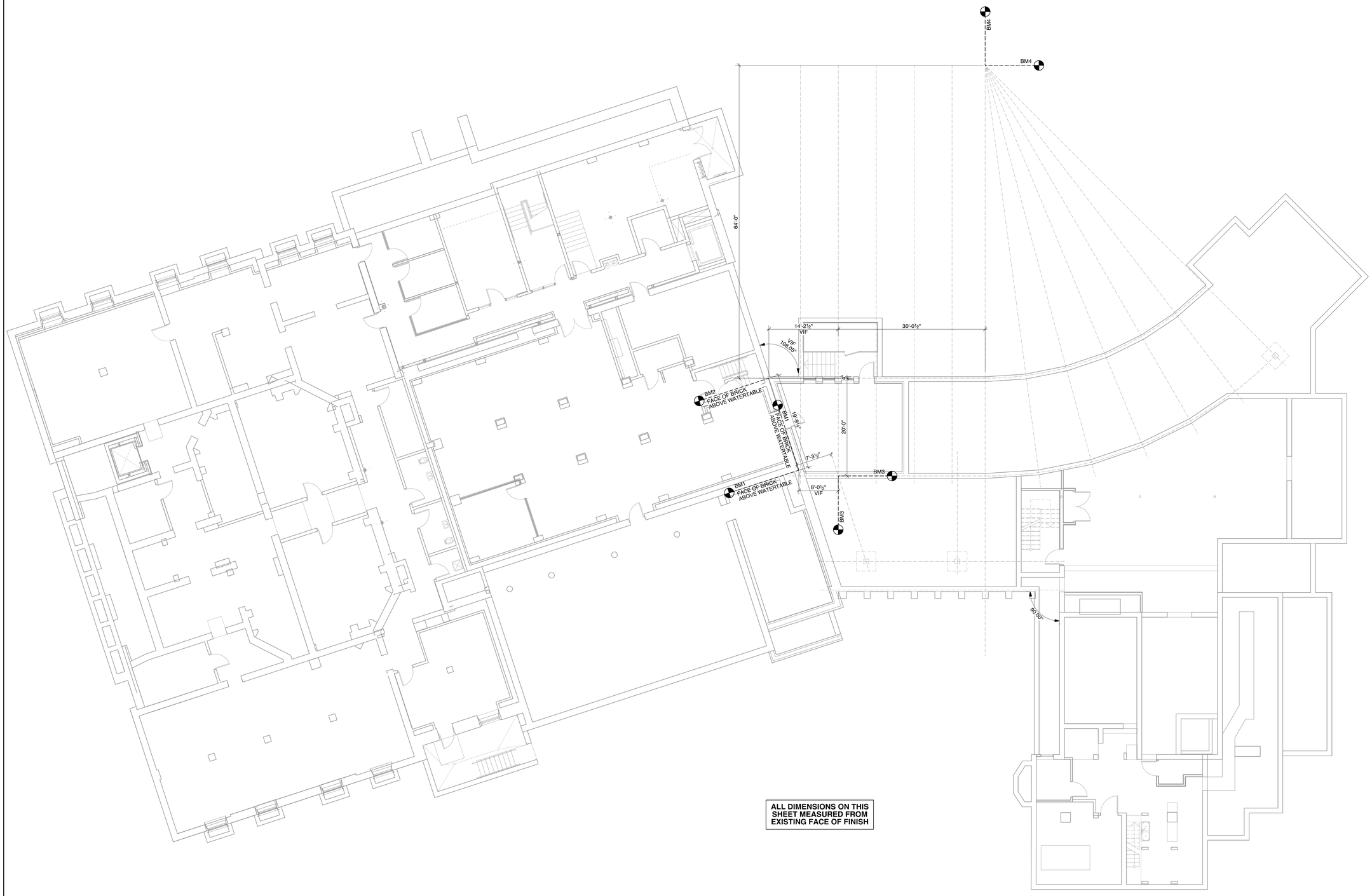

ALL DIMENSIONS ON THIS SHEET MEASURED FROM EXISTING FACE OF FINISH

1 / A2.0 BASEMENT BENCHMARK LOCATOR PLAN
Scale: 1/8" = 1'-0"

JOHNSON ROBERTS ASSOCIATES INC.
ARCHITECTS

15 PROPERZI WAY
SOMERVILLE, MA
02143-3228

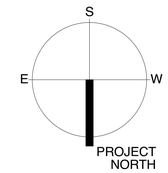

Revisions:

CONCORD FREE PUBLIC LIBRARY EXPANSION

Sheet Title:

BENCHMARK LOCATOR PLAN

Date: 24-Oct-19 Drawn By: MEB

Scale: 1/8" = 1'-0" Project No.: 1714

A2.0

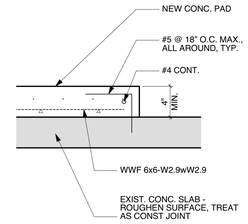

2 / A2.1 HOUSEKEEPING PAD DETAIL
Scale: 1 1/2" = 1'-0"

DATUM:

T.O.F.F. AT EXISTING HOUSE GROUND FLOOR = 0'-0"

T.O.F.F. AT EXISTING LIBRARY GROUND FLOOR = 4'-7 1/2" - VIF

GRID LINES ARE MEASURED TO CENTER OF STRUCTURE UON

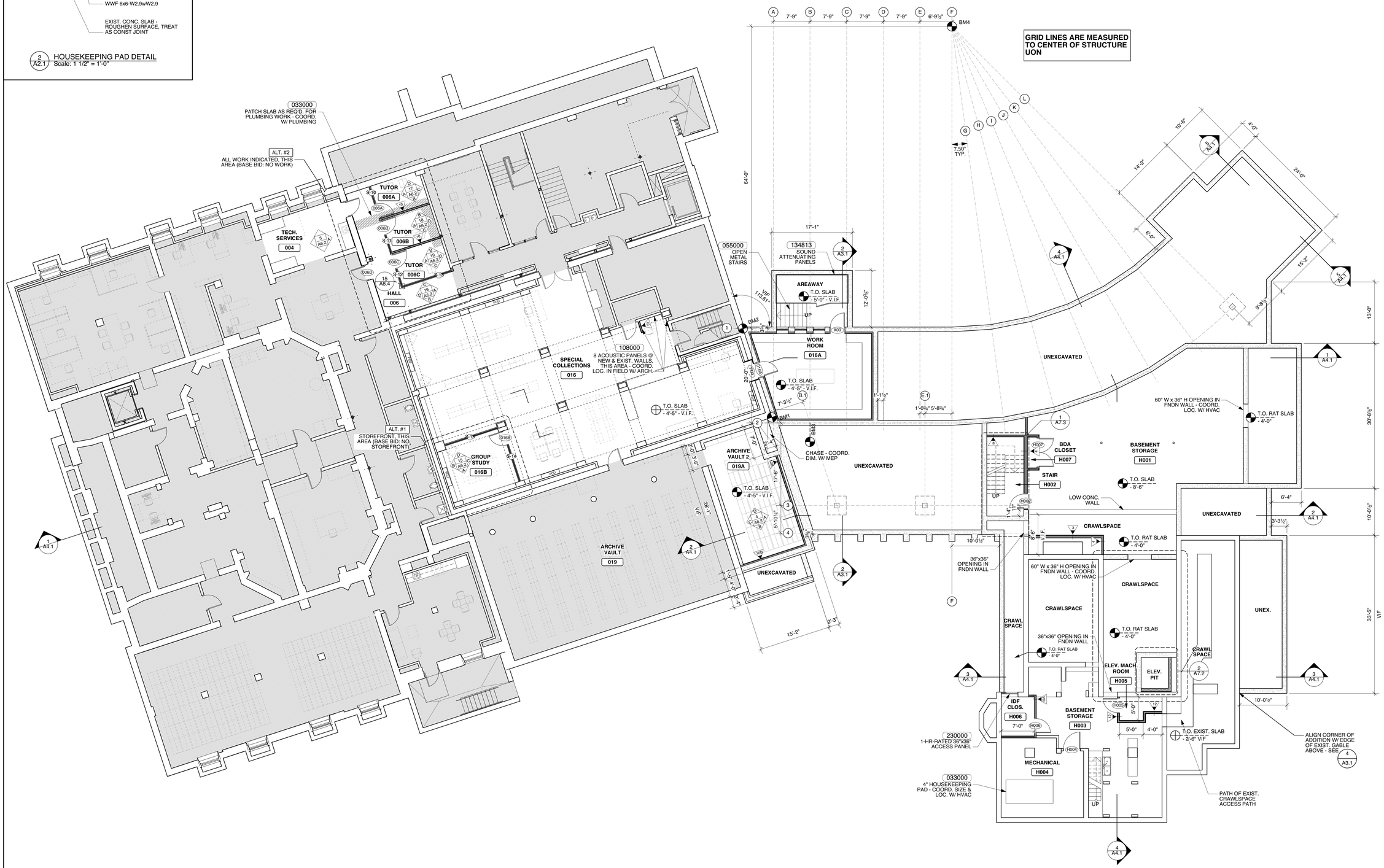

1 / A2.1 BASEMENT PLAN
Scale: 1/8" = 1'-0"

JOHNSON ROBERTS ASSOCIATES INC.
ARCHITECTS
15 PROPERZI WAY
SOMERVILLE, MA
02143-3228

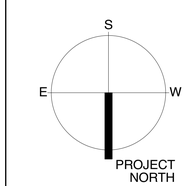

Revisions:

CONCORD FREE PUBLIC LIBRARY EXPANSION

Sheet Title:

BASEMENT PLAN

Date: 24-Oct-19 Drawn By: MEB

Scale: 1/8" = 1'-0" Project No.: 1714

A2.1

DATUM:

T.O.F.F. AT EXISTING HOUSE GROUND FLOOR = 0'-0"

T.O.F.F. AT EXISTING LIBRARY GROUND FLOOR = 4'-7 1/2" - VIF

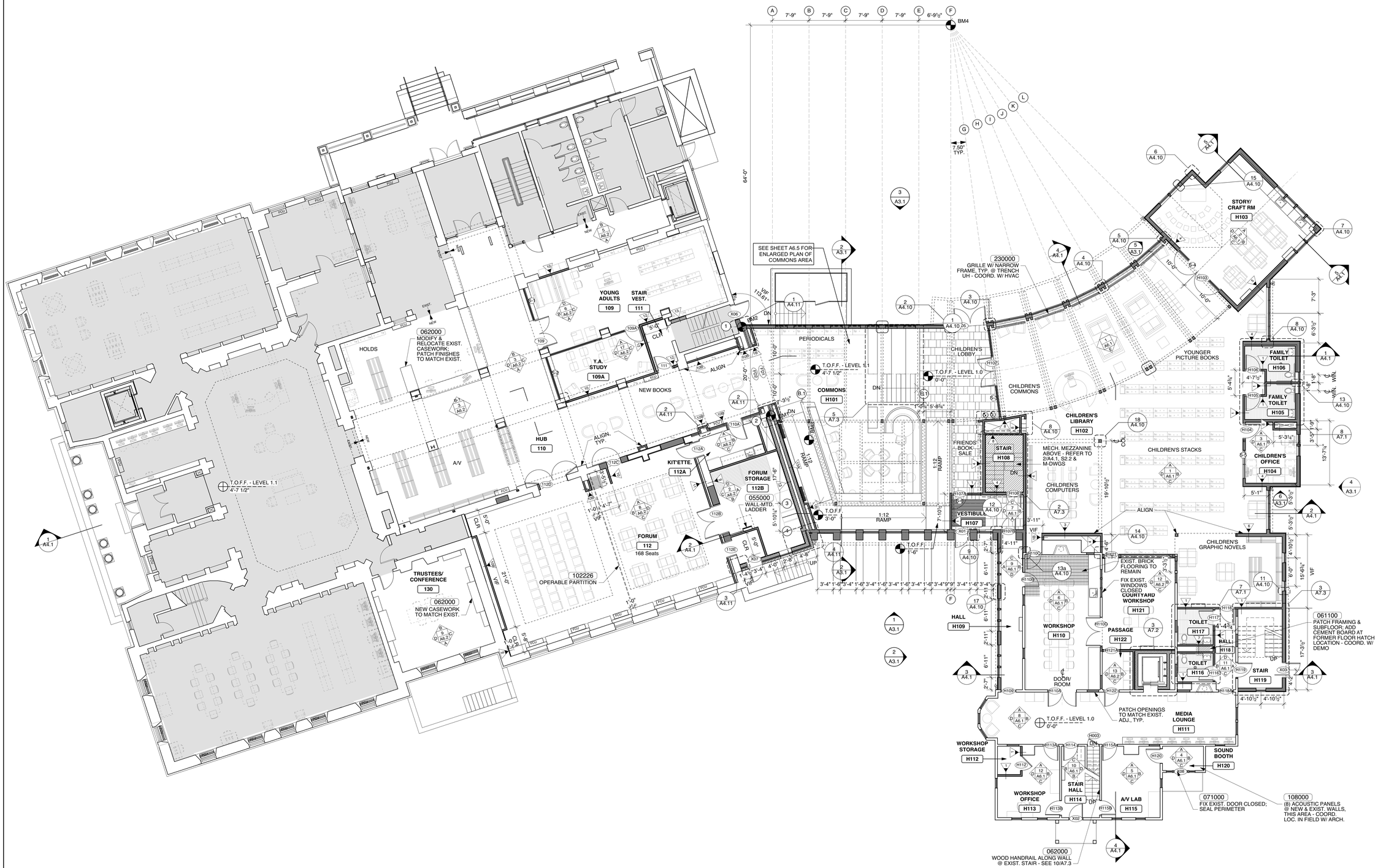

1 A2.2 GROUND FLOOR PLAN
Scale: 1/8" = 1'-0"

JOHNSON ROBERTS ASSOCIATES INC.
ARCHITECTS

15 PROPERZI WAY
SOMERVILLE, MA
02143-3228

S
E W
PROJECT NORTH

Revisions:

CONCORD FREE PUBLIC LIBRARY EXPANSION

Sheet Title:
GROUND FLOOR PLAN

Date: 24-Oct-19 Drawn By: MEB

Scale: 1/8" = 1'-0" Project No.: 1714

A2.2

ROOFING KEY:

- EXISTING ROOFING TO REMAIN
- 075419 — NEW SINGLE-PLY MEMBRANE ROOFING
- 075000 — NEW CEDAR SHAKE ROOFING TO MATCH EXIST. / NEW ASPHALT SHINGLE ROOFING - ICE & WATER SHIELD AT ALL SHAKE & SHINGLE ROOFING
- 075419 — 36" WIDE WALK PADS
- RH — 075419 077200 — ROOF HATCH - COORD. LOCATION W/ HVAC - SEE 12/A2.4
- HOOD — 230000 — LOW-PROFILE ROOF HOOD - COORD. LOCATION W/ HVAC; LOCATE SO EQUIP. IS NOT VISIBLE FROM STREET
- V — 075000 075419 — VENT PIPE - SEE 8 & 9/A2.4
- DS — 077100 — DOWNSPOUT - 4" DIA. UON
- 077100 — GUTTER
- SLOPE (EXIST. IF NO PITCH INDICATED)

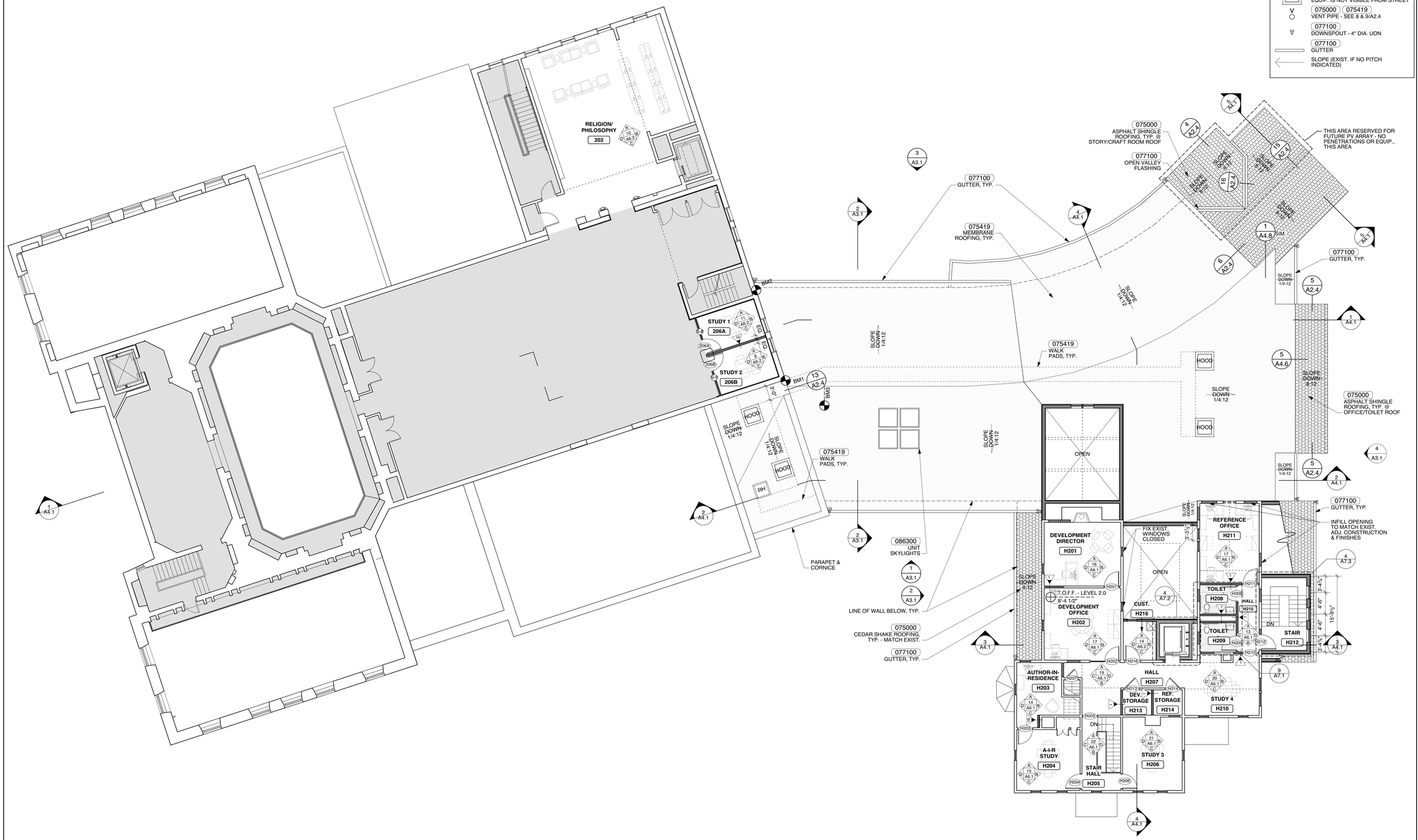

1 / A2.3 SECOND FLOOR / CLERESTORY PLAN
Scale: 1/8" = 1'-0"

JOHNSON ROBERTS ASSOCIATES INC.
ARCHITECTS

15 PROPERZI WAY
SOMERVILLE, MA
02143-3228

S E W
PROJECT NORTH

Revisions:

CONCORD FREE PUBLIC LIBRARY EXPANSION

Sheet Title:
SECOND FLOOR / LOW ROOF PLAN

Date: 24-Oct-19 Drawn By: MEB

Scale: 1/8" = 1'-0" Project No.: 1714

A2.3

2 / A2.4 NOT USED

3 / A2.4 NOT USED

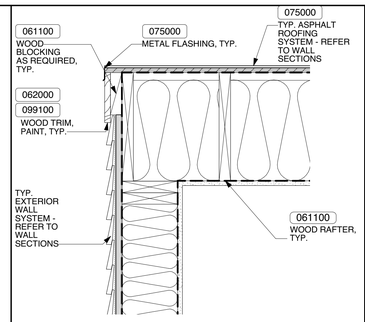

4 / A2.4 RAKE DETAIL @ STORY/CRAFT ROOM
Scale: 1 1/2" = 1'-0"

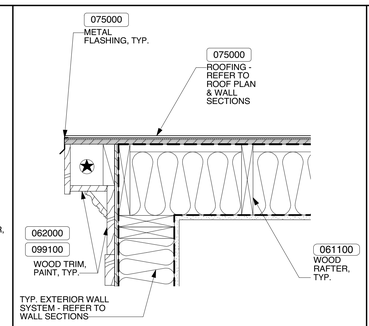

5 / A2.4 RAKE DETAIL @ WOOD SHINGLE ROOF-TYP.
Scale: 1 1/2" = 1'-0"

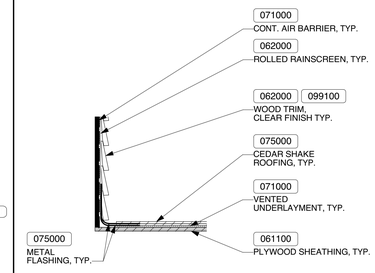

6 / A2.4 TYP. STEP FLASHING DETAIL @ DORMER
Scale: 1 1/2" = 1'-0"

ROOFING KEY:

- EXISTING ROOFING TO REMAIN
- 075419 NEW SINGLE-PLY MEMBRANE ROOFING
- 075000 NEW CEDAR SHAKE ROOFING TO MATCH EXIST. / NEW ASPHALT SHINGLE ROOFING - ICE & WATER SHIELD AT ALL SHAKE & SHINGLE ROOFING
- 075419 36" WIDE WALK PADS
- RH 075419 077200 ROOF HATCH - COORD. LOCATION W/ HVAC - SEE 12/A2.4
- HOOD 230000 LOW-PROFILE ROOF HOOD - COORD. LOCATION W/ HVAC; LOCATE SO EQUIP. IS NOT VISIBLE FROM STREET
- V 075000 075419 VENT PIPE - SEE 8 & 9/A2.4
- DS 077100 DOWNSPOUT - 4" DIA. UON
- 077100 GUTTER
- SLOPE (EXIST. IF NO PITCH INDICATED)

7 / A2.4 NOT USED

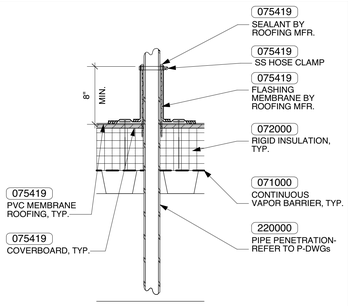

8 / A2.4 TYPICAL PENETRATION DETAIL
Scale: 1 1/2" = 1'-0"

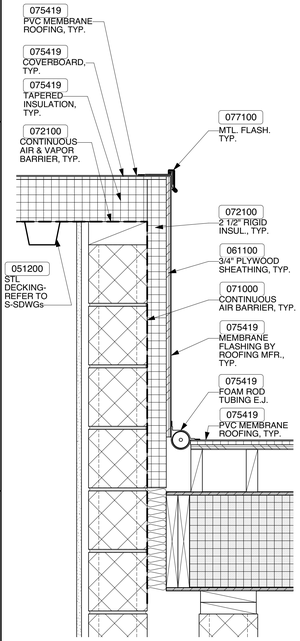

13 / A2.4 HIGH-LOW ROOF DETAIL
Scale: 1 1/2" = 1'-0"

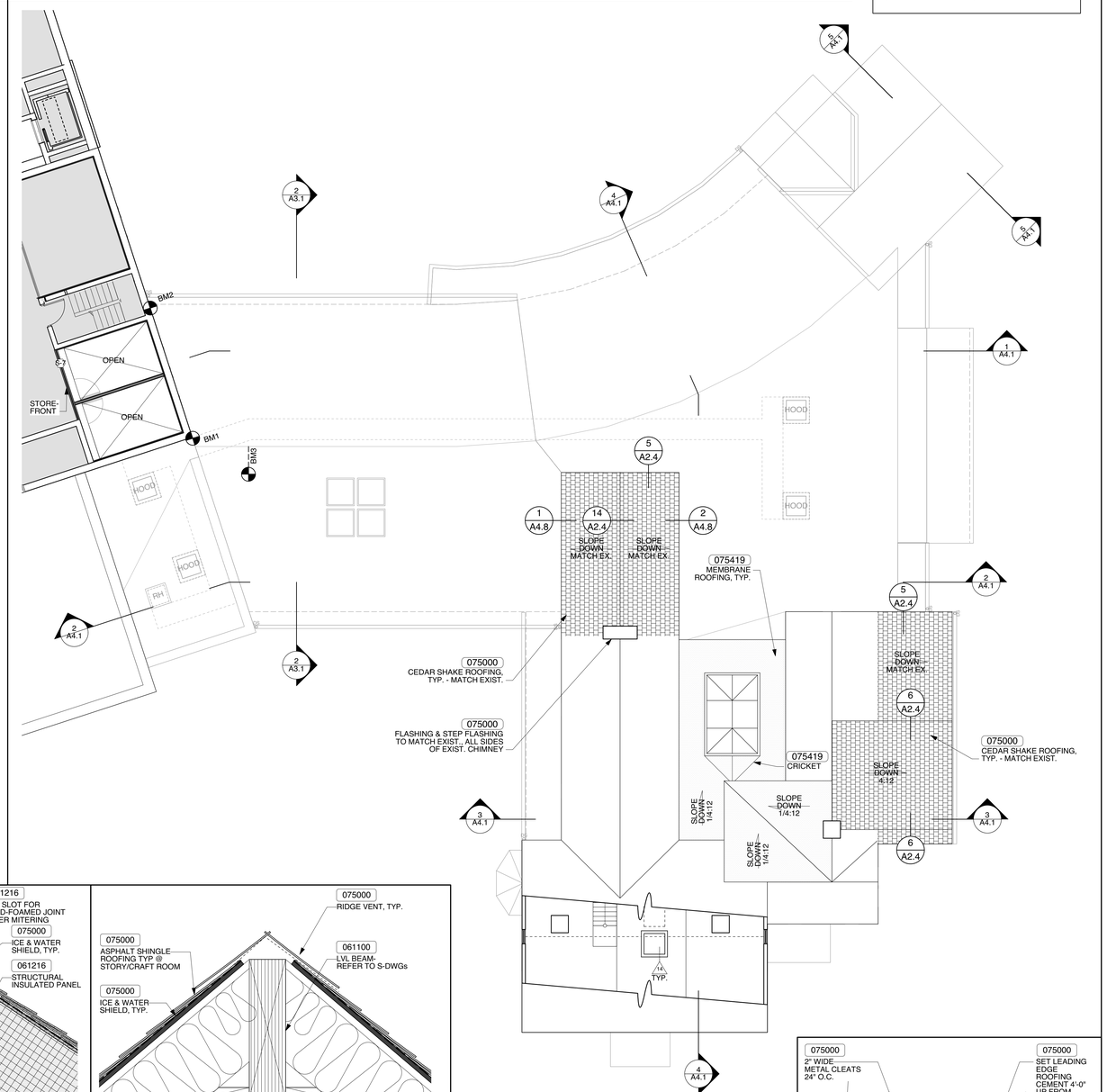

1 / A2.4 ROOF / THIRD FLOOR PLAN
Scale: 1/8" = 1'-0"

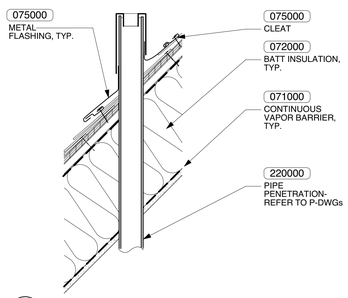

9 / A2.4 TYPICAL PENETRATION DETAIL
Scale: 1 1/2" = 1'-0"

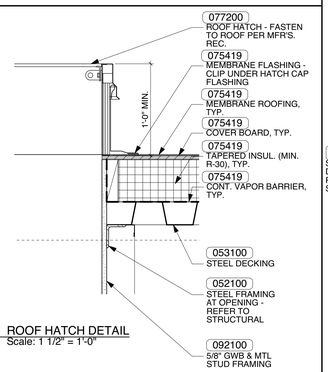

10 / A2.4 ROOF HATCH DETAIL
Scale: 1 1/2" = 1'-0"

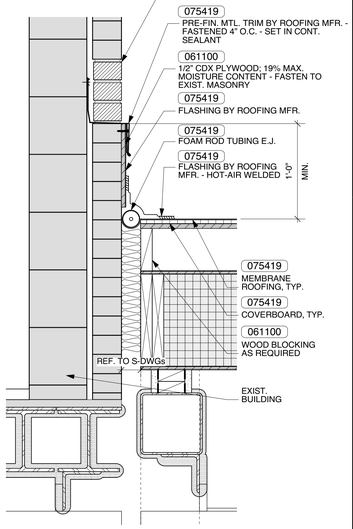

12 / A2.4 FLASHING DETAIL @ EXIST. MASONRY WALL
Scale: 1 1/2" = 1'-0"

11 / A2.4 NOT USED

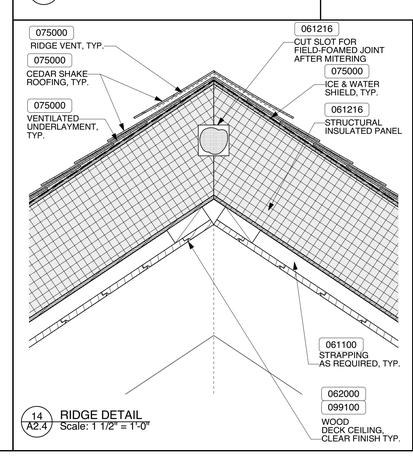

14 / A2.4 RIDGE DETAIL
Scale: 1 1/2" = 1'-0"

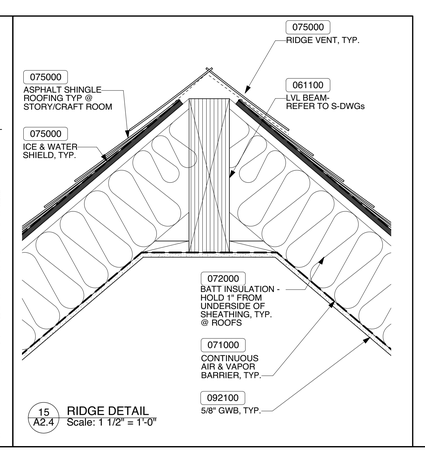

15 / A2.4 RIDGE DETAIL
Scale: 1 1/2" = 1'-0"

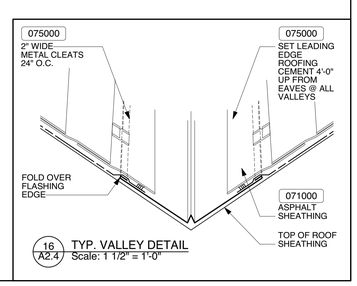

16 / A2.4 TYP. VALLEY DETAIL
Scale: 1 1/2" = 1'-0"

JOHNSON ROBERTS ASSOCIATES INC.
ARCHITECTS
15 PROPERZI WAY
SOMERVILLE, MA
02143-3228

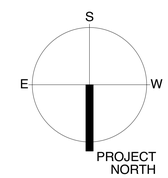

Revisions:

CONCORD FREE PUBLIC LIBRARY EXPANSION

Sheet Title:

THIRD FLOOR / ROOF PLAN & DETAILS

Date: 24-Oct-19 Drawn By: MEB

Scale: 1/8" = 1'-0" Project No.: 1714

A2.4

NOTES:

1. REMOVE ALL ROTTED SIDING, TRIM & OTHER WOOD MEMBERS FROM EXISTING HOUSE; REPLACE IN-KIND TO MATCH EXISTING DIMENSIONS, PROFILE & EXPOSURE
2. ALIGN WINDOWS, DOORS & TRIM W/ SIDING COURSING

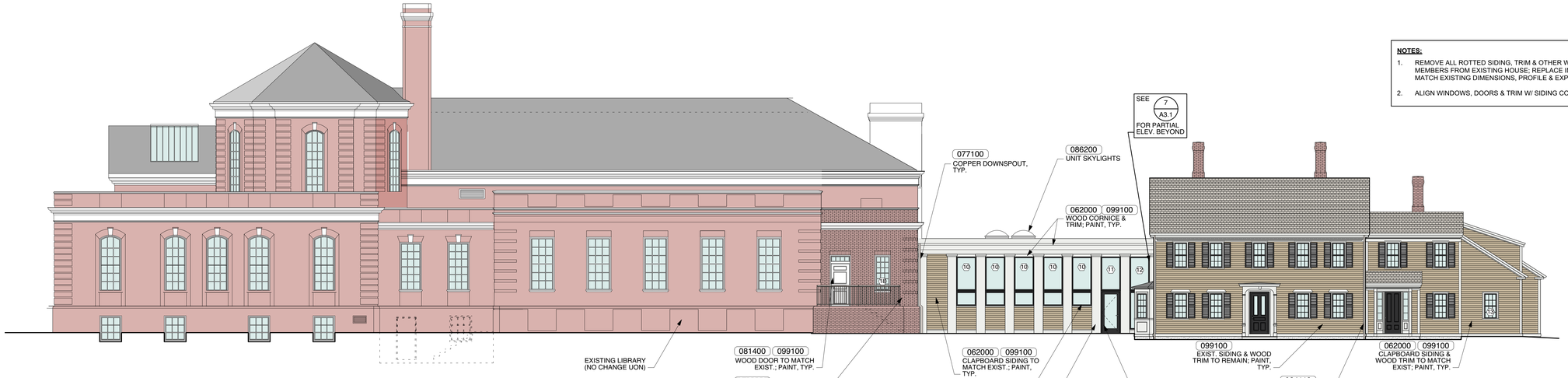

1 A3.1 NORTH ELEVATION
Scale: 1/8" = 1'-0"

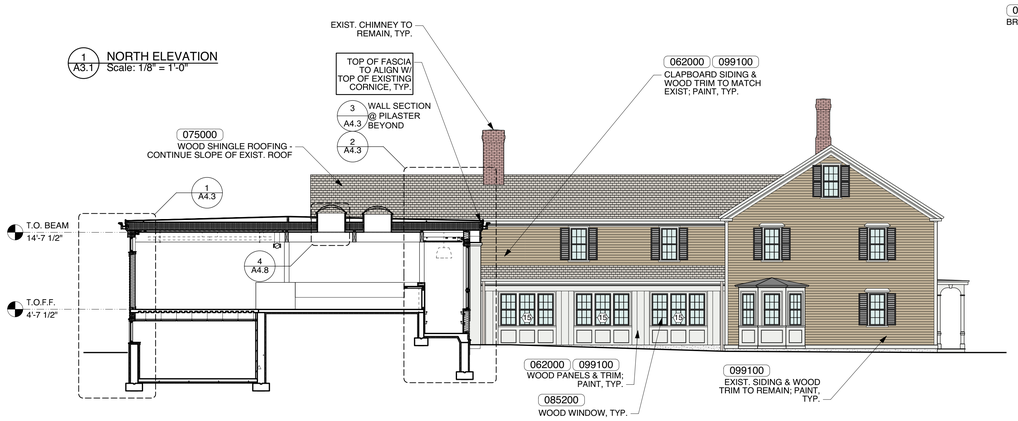

2 A3.1 EAST ELEVATION / SECTION
Scale: 1/8" = 1'-0"

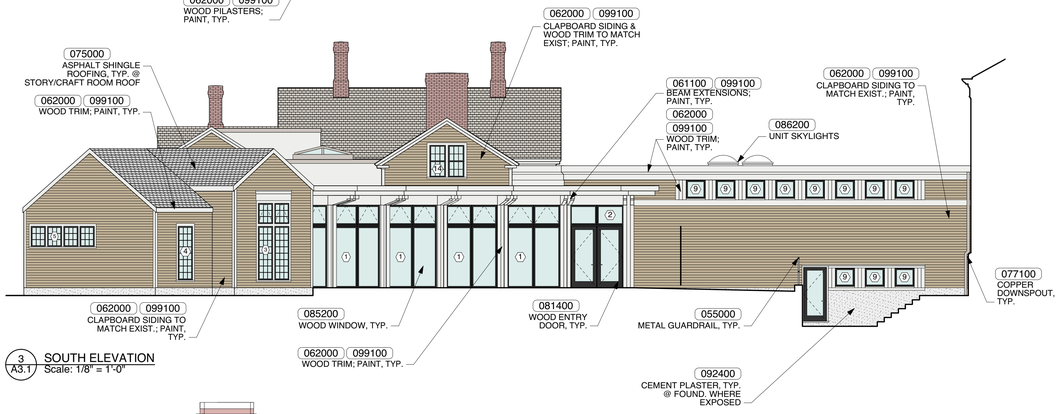

3 A3.1 SOUTH ELEVATION
Scale: 1/8" = 1'-0"

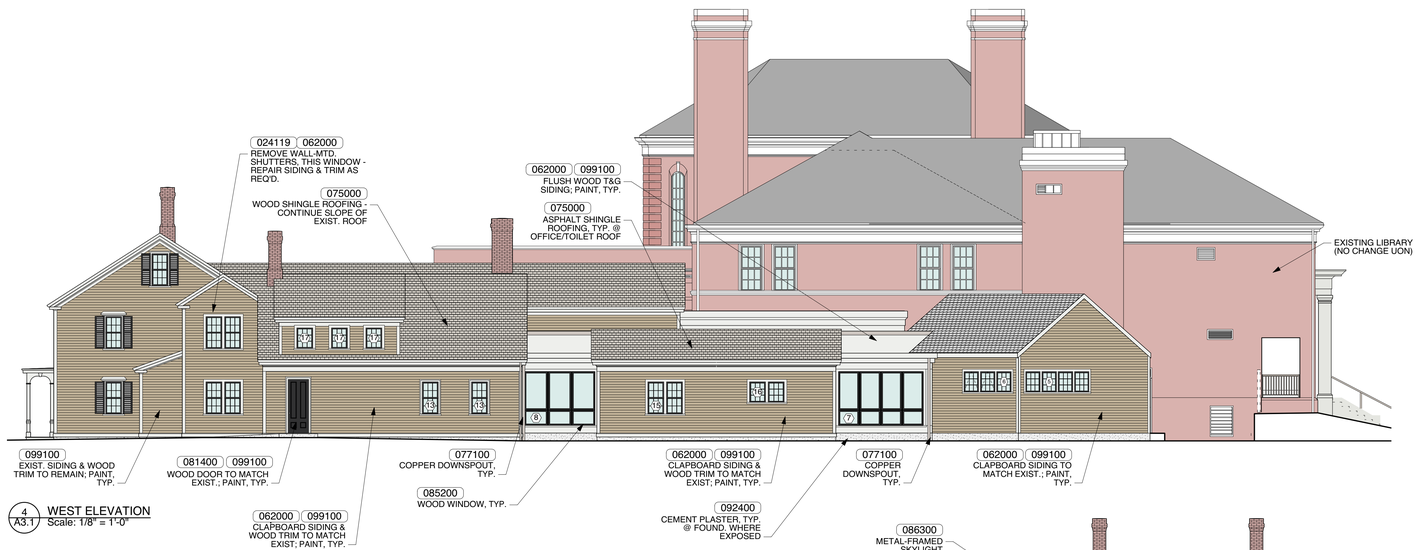

4 A3.1 WEST ELEVATION
Scale: 1/8" = 1'-0"

PAINT SCHEDULE

- SIDING & OTHER ITEMS INDICATED: BENJAMIN MOORE HC-108 SANDY HOOK GRAY
- TRIM, FRAMES & OTHER ITEMS INDICATED: BENJAMIN MOORE OC-47 ASHWOOD (TO MATCH EXISTING)
- DOORS, SASHES, SHUTTERS & OTHER ITEMS INDICATED: BENJAMIN MOORE HC-190 BLACK

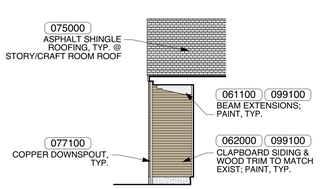

5 A3.1 PARTIAL EAST ELEVATION
Scale: 1/8" = 1'-0"

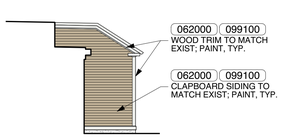

6 A3.1 PARTIAL NORTH ELEVATION
Scale: 1/8" = 1'-0"

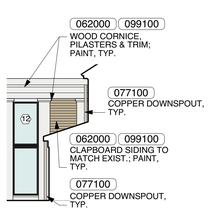

7 A3.1 PARTIAL NORTH ELEVATION
Scale: 1/8" = 1'-0"

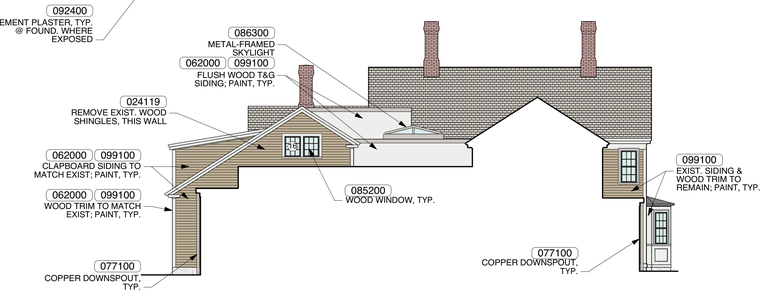

8 A3.1 PARTIAL SOUTH ELEVATION
Scale: 1/8" = 1'-0"

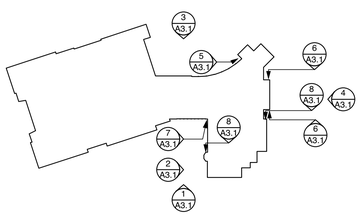

9 A3.1 ELEVATION KEY PLAN
Scale: 1/64" = 1'-0"

JOHNSON ROBERTS ASSOCIATES INC.
ARCHITECTS
15 PROPERZI WAY
SOMERVILLE, MA
02143-3228

Revisions:

CONCORD FREE PUBLIC LIBRARY EXPANSION

Sheet Title:

ELEVATIONS

Date: 24-Oct-19 Drawn By: MEB

Scale: 1/8" = 1'-0" Project No.: 1714

A3.1

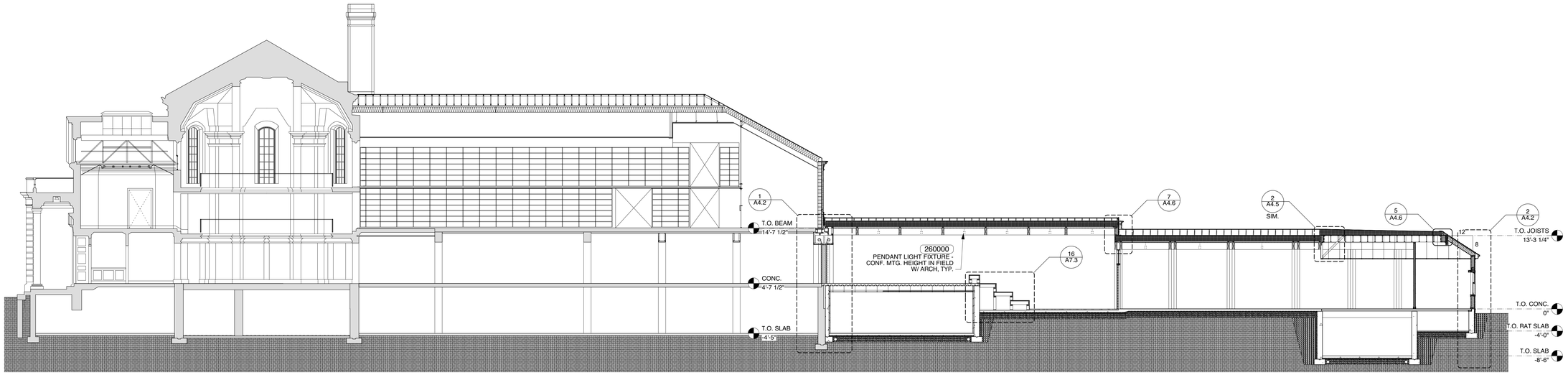

1 A4.1 BUILDING SECTION
Scale: 1/8" = 1'-0"

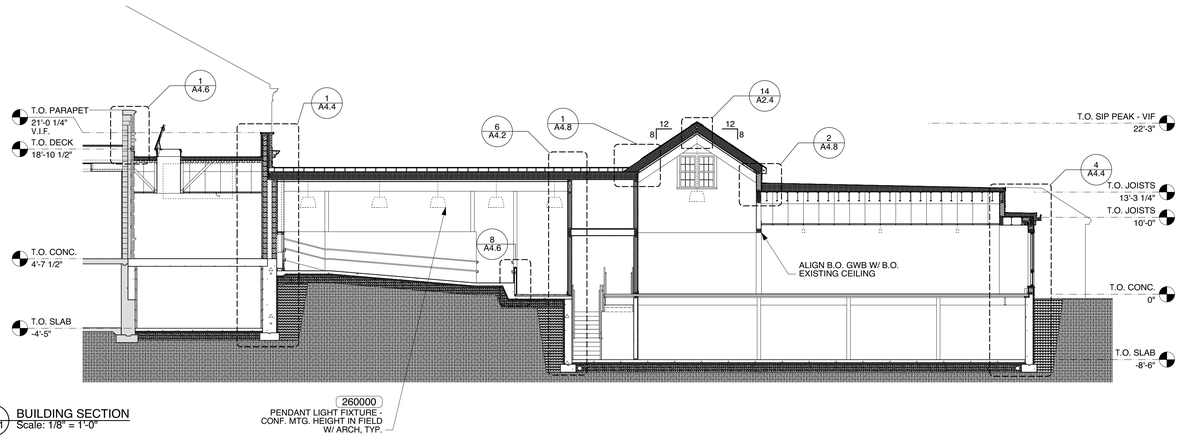

2 A4.1 BUILDING SECTION
Scale: 1/8" = 1'-0"

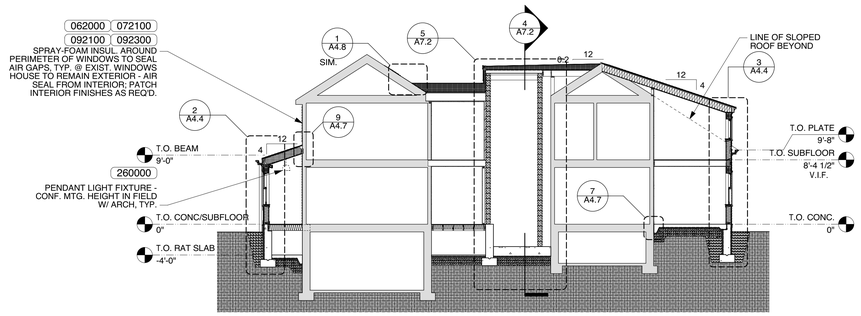

3 A4.1 BUILDING SECTION
Scale: 1/8" = 1'-0"

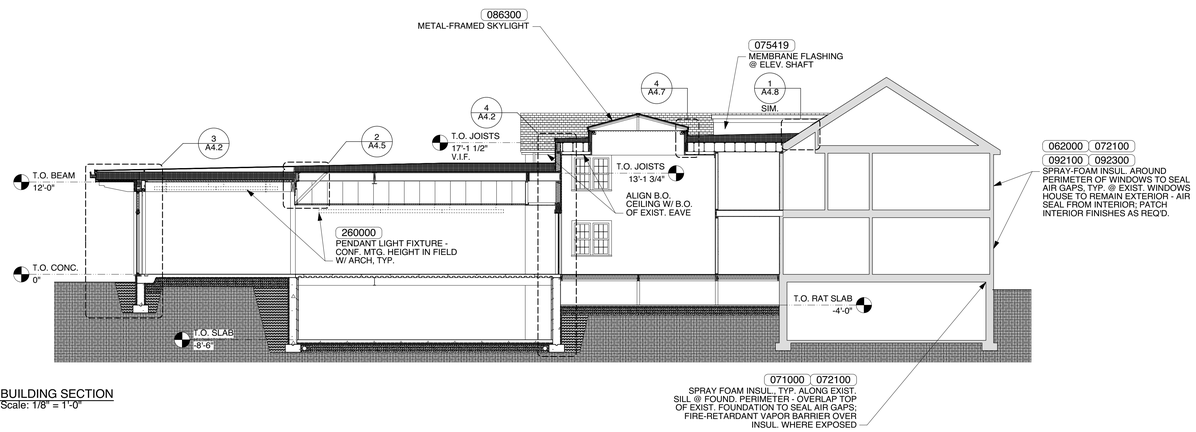

4 A4.1 BUILDING SECTION
Scale: 1/8" = 1'-0"

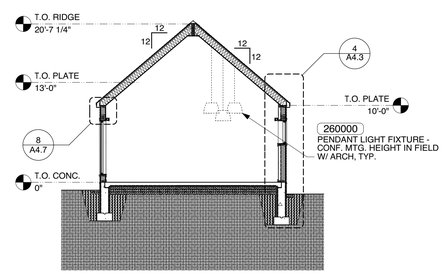

5 A4.1 BUILDING SECTION
Scale: 1/8" = 1'-0"

JOHNSON ROBERTS ASSOCIATES INC.
ARCHITECTS
15 PROPERZI WAY
SOMERVILLE, MA
02143-3228

Revisions:

CONCORD FREE PUBLIC LIBRARY EXPANSION

Sheet Title:

BUILDING SECTIONS

Date: 24-Oct-19 Drawn By: MEB

Scale: 1/8" = 1'-0" Project No.: 1714

A4.1

GENERAL NOTE:

CONCEAL UTILITIES ABOVE CEILING, INCL. 2 1/4" CLEAR SPACE ABOVE WOOD DECK CEILING TO GREATEST EXTENT POSSIBLE. CONFIRM LOCATION OF ALL UTILITIES EXPOSED-TO-VIEW IN FIELD W/ ARCHITECT; PAINT. COORD. W/ FP, P, M, E, & T DWGs

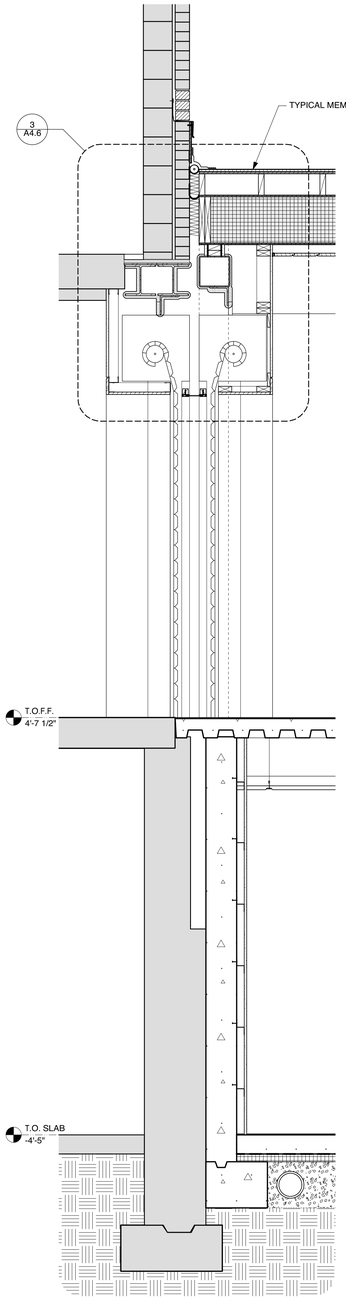

1 A4.2 WALL SECTION
Scale: 3/4" = 1'-0"

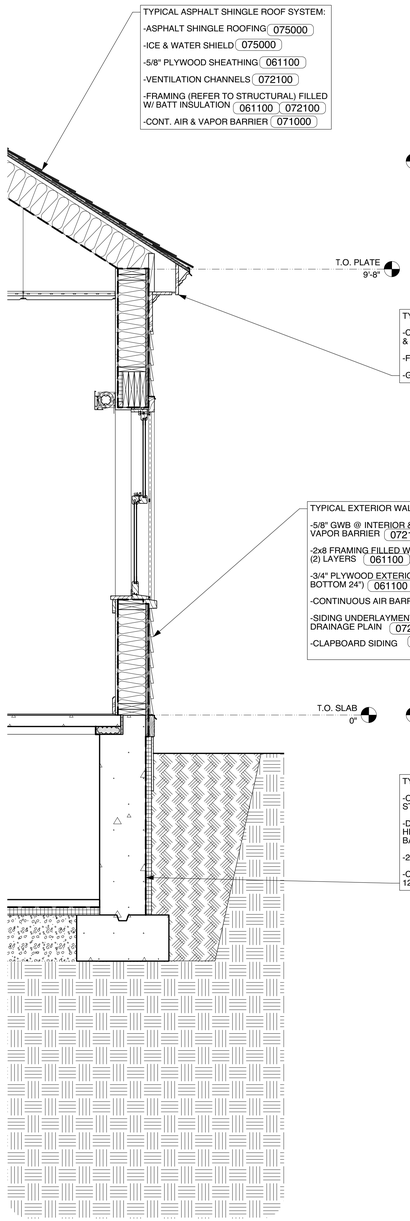

2 A4.2 WALL SECTION
Scale: 3/4" = 1'-0"

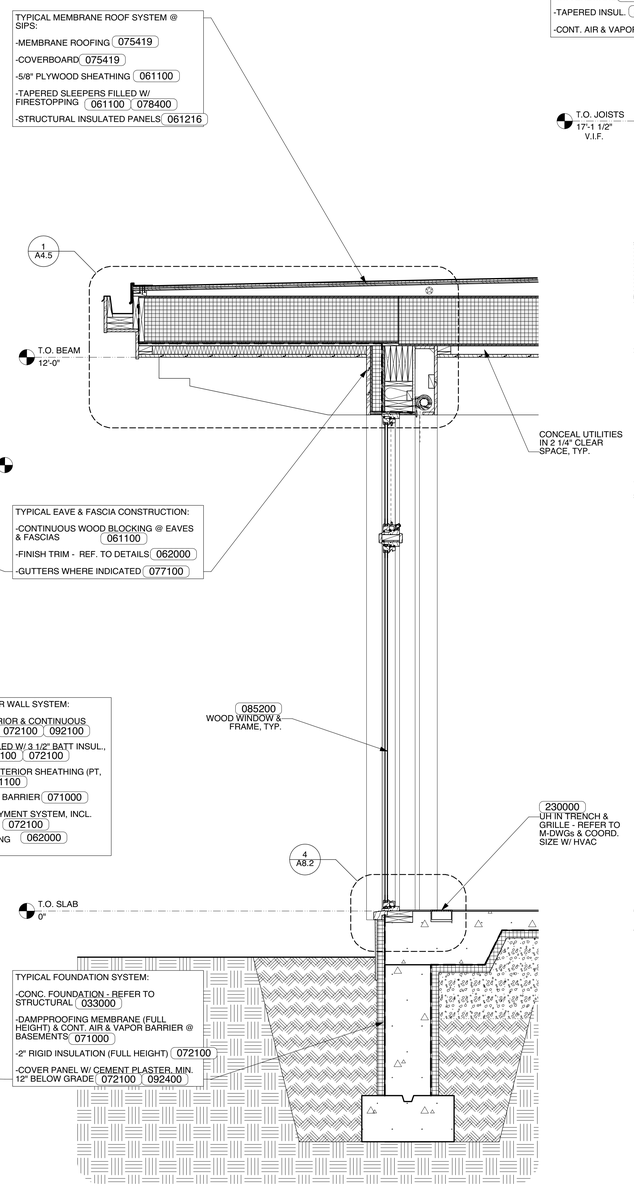

3 A4.2 WALL SECTION
Scale: 3/4" = 1'-0"

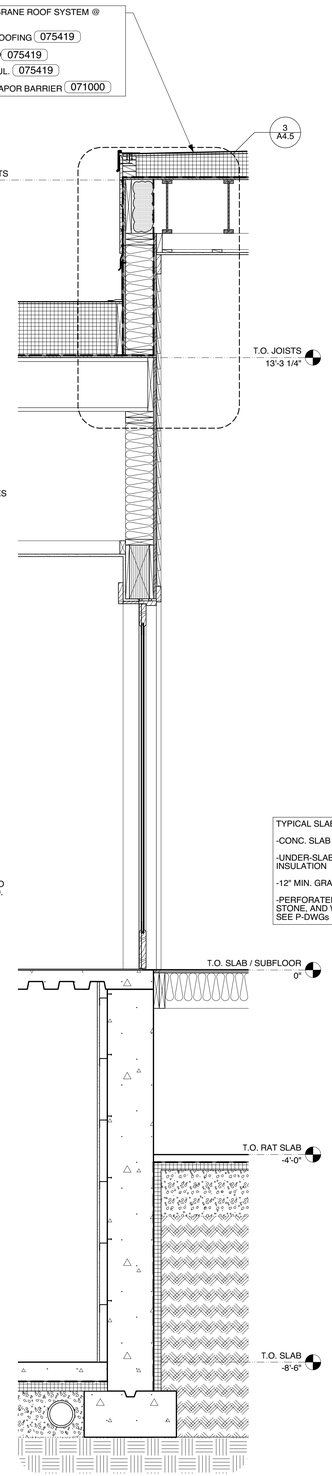

4 A4.2 WALL SECTION
Scale: 3/4" = 1'-0"

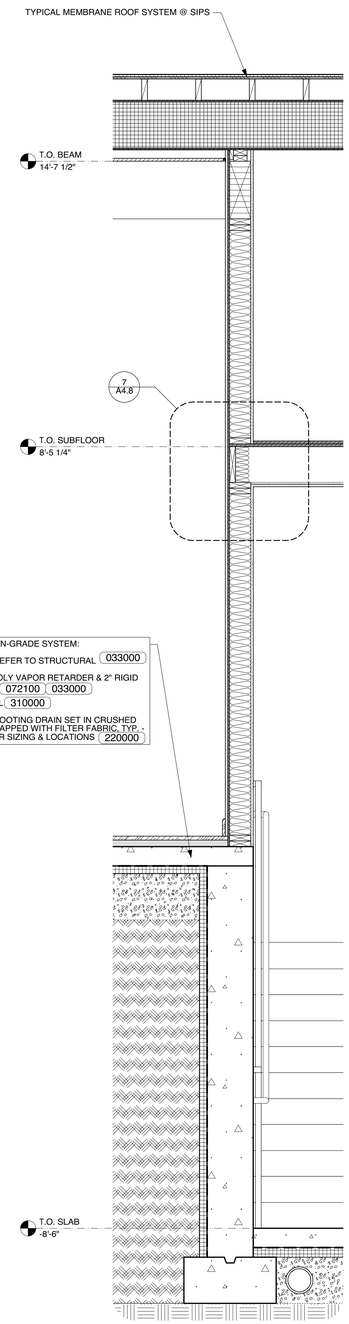

5 A4.2 WALL SECTION
Scale: 3/4" = 1'-0"

JOHNSON ROBERTS ASSOCIATES INC.
ARCHITECTS
15 PROPERZI WAY
SOMERVILLE, MA
02143-3228

Revisions:

CONCORD FREE PUBLIC LIBRARY EXPANSION

Sheet Title:

WALL SECTIONS

Date: 24-Oct-19 Drawn By: MEB

Scale: 3/4" = 1'-0" Project No.:1714

A4.2

GENERAL NOTE:

CONCEAL UTILITIES ABOVE CEILING, INCL. 2 1/4" CLEAR SPACE ABOVE WOOD DECK CEILING TO GREATEST EXTENT POSSIBLE. CONFIRM LOCATION OF ALL UTILITIES EXPOSED-TO-VIEW IN FIELD W/ ARCHITECT; PAINT. COORD. W/ FP, P, M, E, & T DWGs

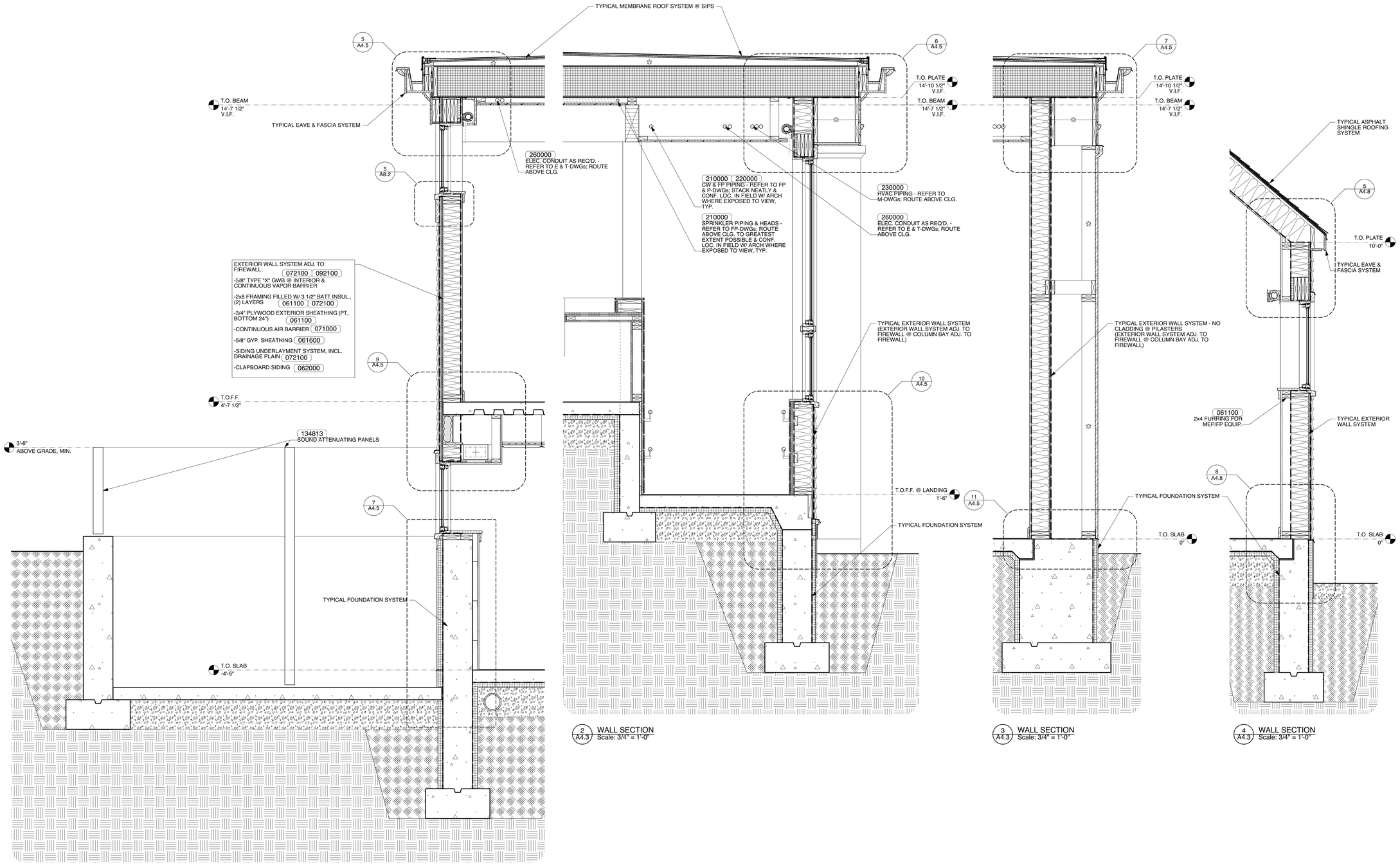

1 A4.3 WALL SECTION
Scale: 3/4" = 1'-0"

2 A4.3 WALL SECTION
Scale: 3/4" = 1'-0"

3 A4.3 WALL SECTION
Scale: 3/4" = 1'-0"

4 A4.3 WALL SECTION
Scale: 3/4" = 1'-0"

JOHNSON ROBERTS ASSOCIATES INC.
ARCHITECTS
15 PROPERZI WAY
SOMERVILLE, MA
02143-3228

Revisions:

CONCORD FREE PUBLIC LIBRARY EXPANSION

Sheet Title:

WALL SECTIONS

Date: 24-Oct-19 Drawn By: MEB

Scale: 3/4" = 1'-0" Project No.: 1714

A4.3

GENERAL NOTE:

CONCEAL UTILITIES ABOVE CEILING, INCL. 2 1/4" CLEAR SPACE ABOVE WOOD DECK CEILING TO GREATEST EXTENT POSSIBLE. CONFIRM LOCATION OF ALL UTILITIES EXPOSED-TO-VIEW IN FIELD W/ ARCHITECT; PAINT. COORD. W/ FP, P, M, E, & T DWGs

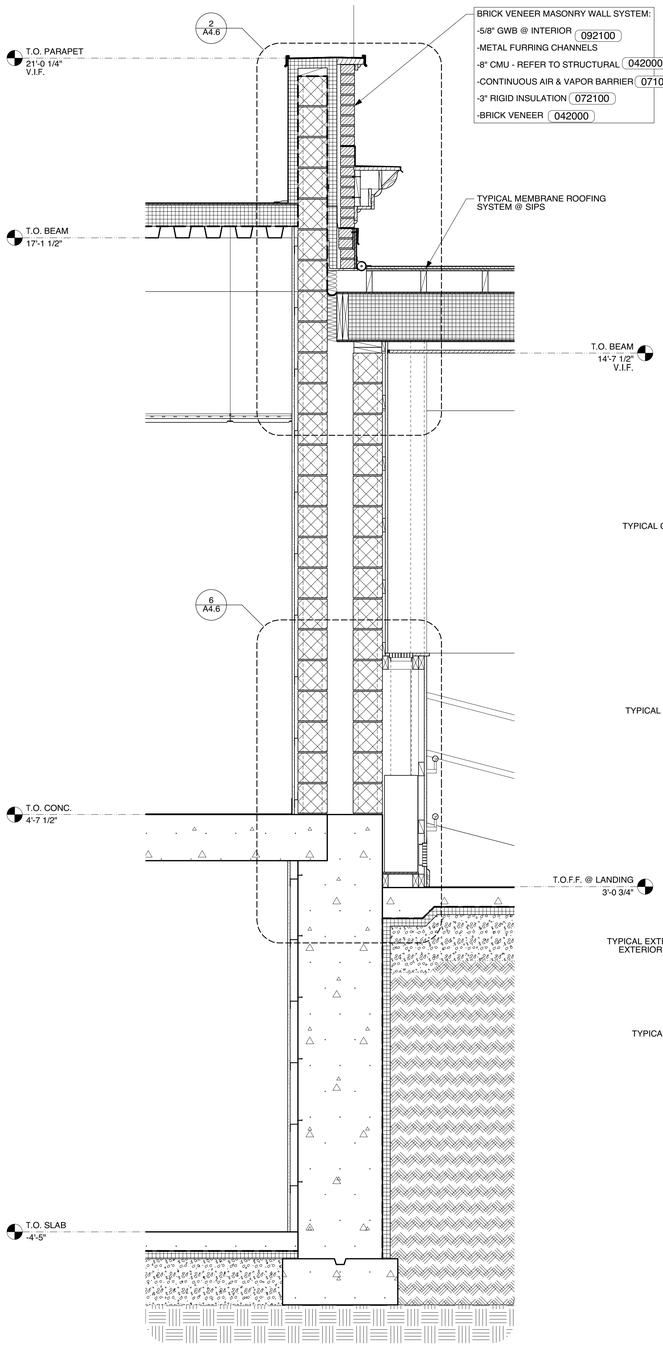

1 A4.4 WALL SECTION
Scale: 3/4" = 1'-0"

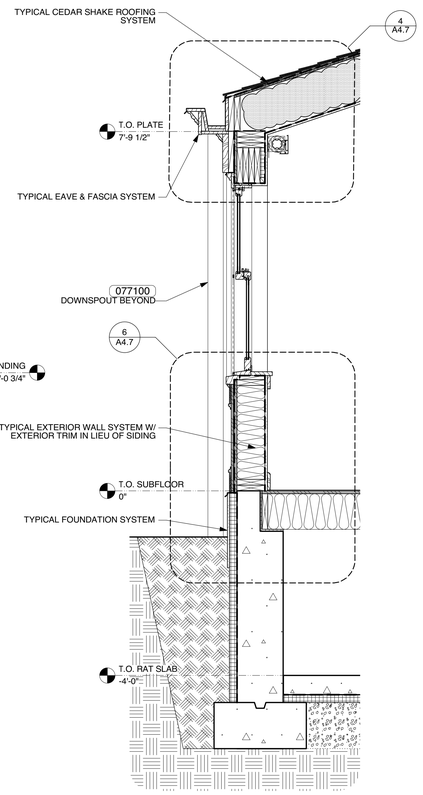

2 A4.4 WALL SECTION
Scale: 3/4" = 1'-0"

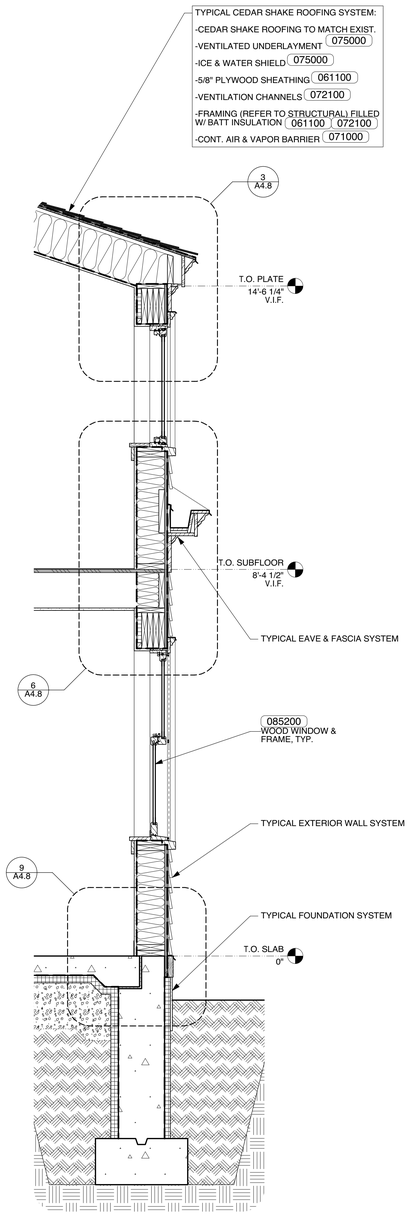

3 A4.4 WALL SECTION
Scale: 3/4" = 1'-0"

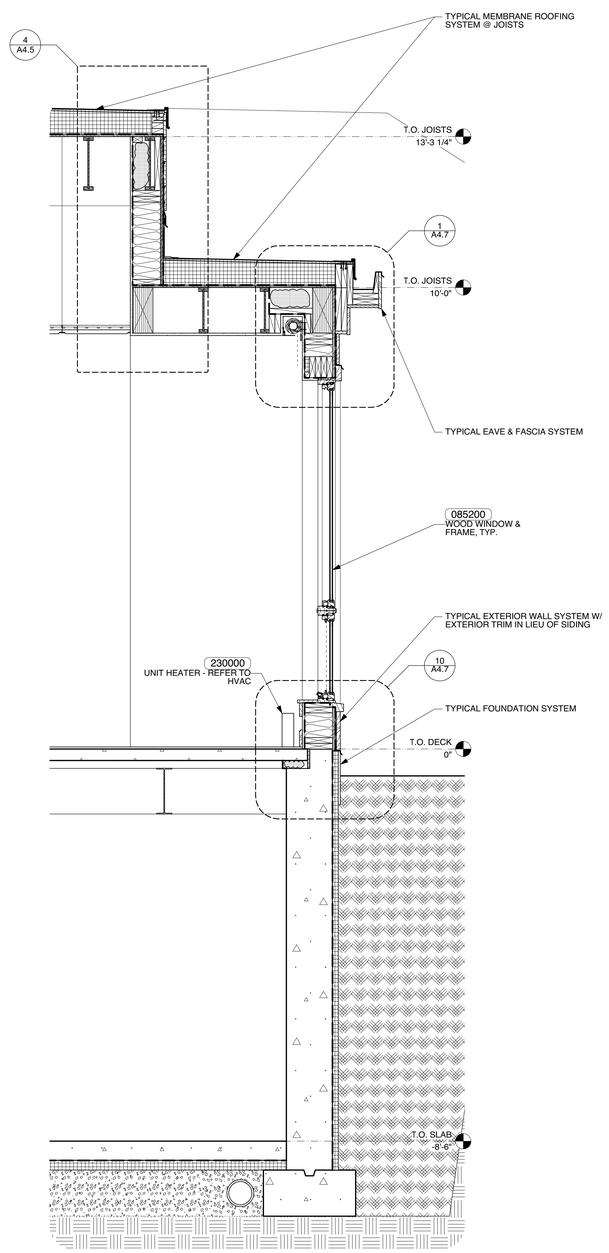

4 A4.4 WALL SECTION
Scale: 3/4" = 1'-0"

JOHNSON ROBERTS ASSOCIATES INC.
ARCHITECTS
15 PROPERZI WAY
SOMERVILLE, MA
02143-3228

Revisions:

CONCORD FREE PUBLIC LIBRARY EXPANSION

Sheet Title:

WALL SECTIONS

Date: 24-Oct-19 Drawn By: MEB

Scale: 3/4" = 1'-0" Project No.: 1714

A4.4

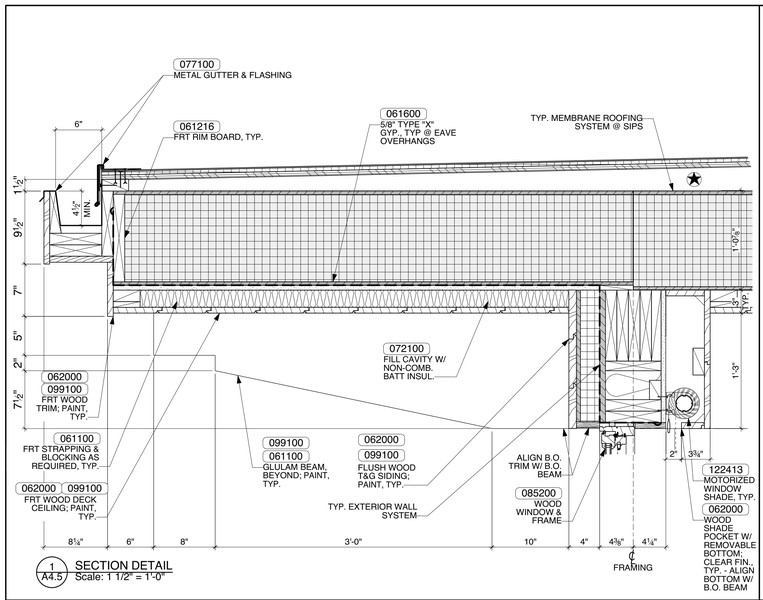

1 A4.5 SECTION DETAIL
Scale: 1 1/2" = 1'-0"

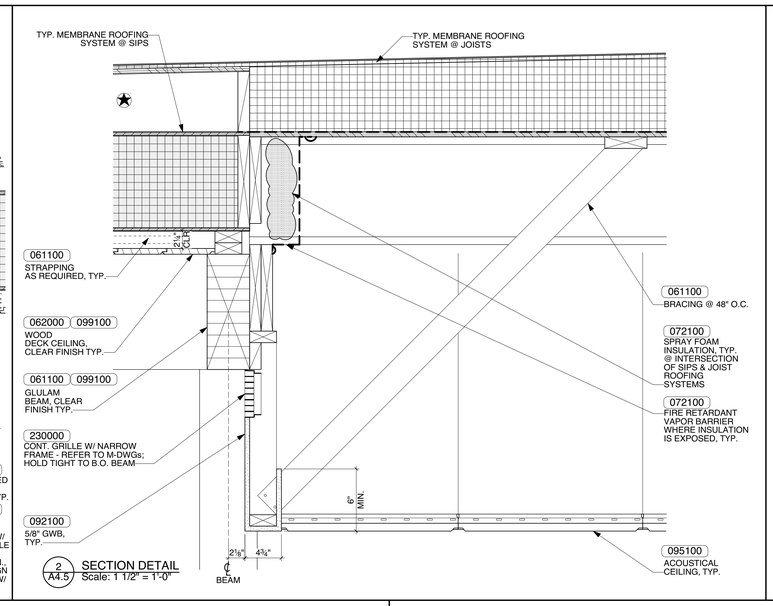

2 A4.5 SECTION DETAIL
Scale: 1 1/2" = 1'-0"

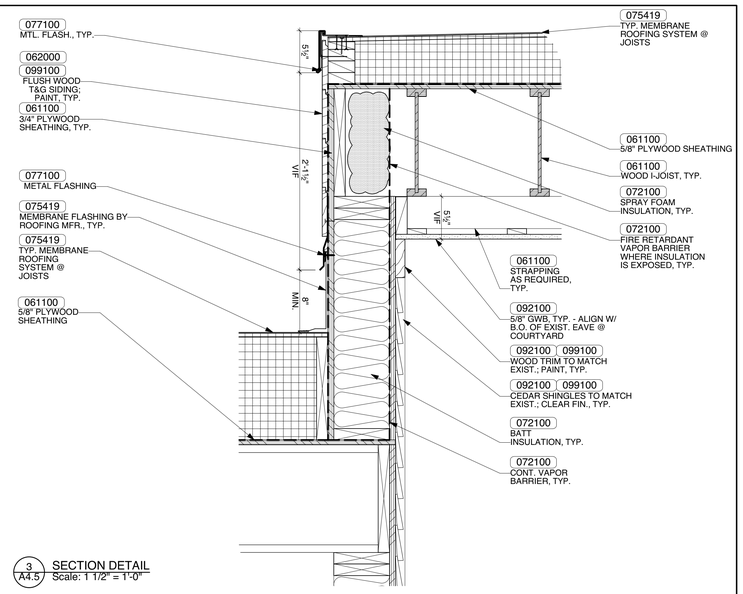

3 A4.5 SECTION DETAIL
Scale: 1 1/2" = 1'-0"

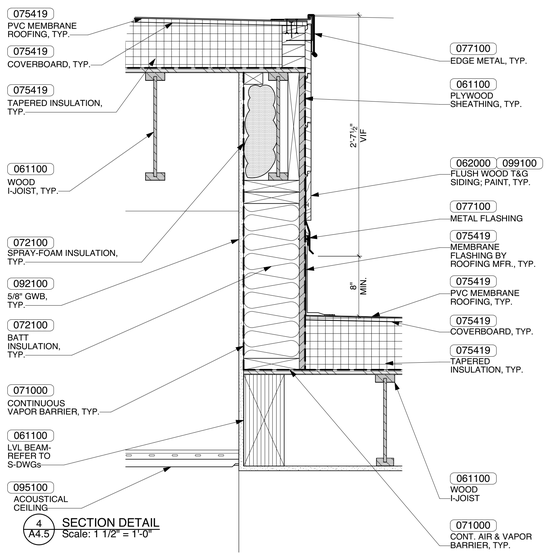

4 A4.5 SECTION DETAIL
Scale: 1 1/2" = 1'-0"

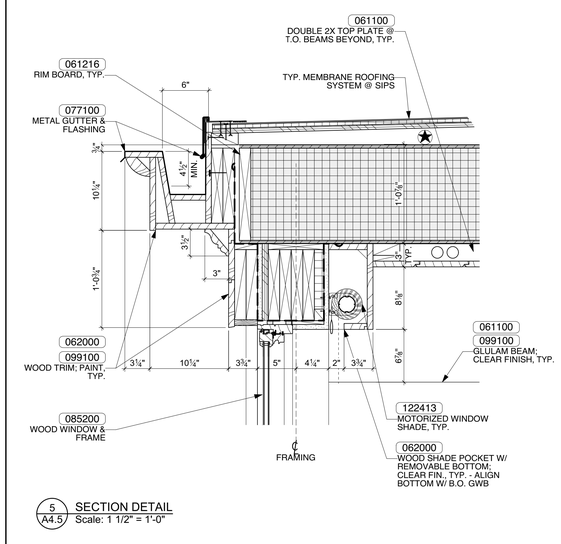

5 A4.5 SECTION DETAIL
Scale: 1 1/2" = 1'-0"

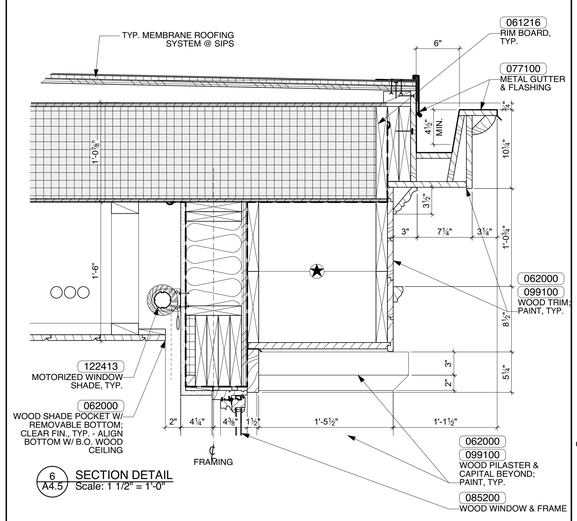

6 A4.5 SECTION DETAIL
Scale: 1 1/2" = 1'-0"

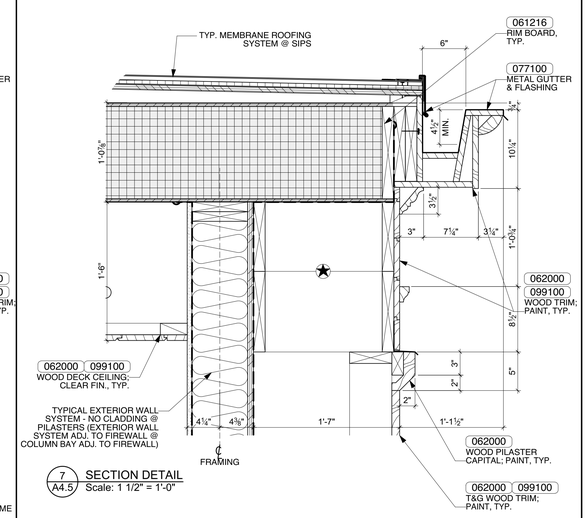

7 A4.5 SECTION DETAIL
Scale: 1 1/2" = 1'-0"

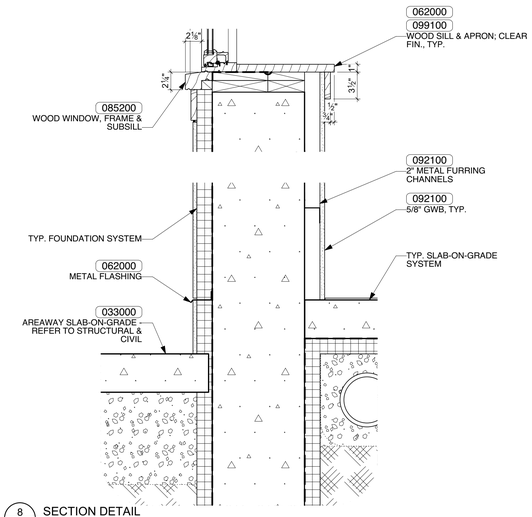

8 A4.5 SECTION DETAIL
Scale: 1 1/2" = 1'-0"

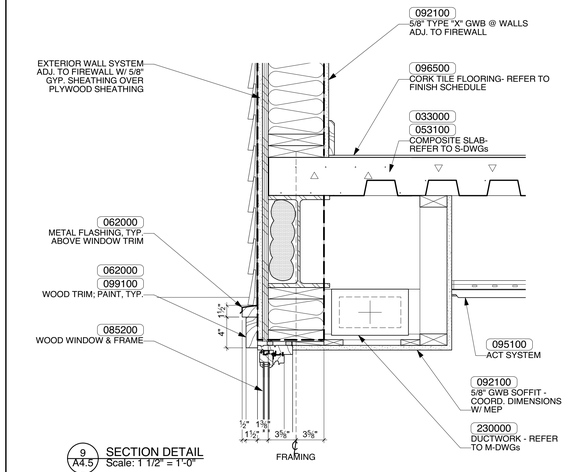

9 A4.5 SECTION DETAIL
Scale: 1 1/2" = 1'-0"

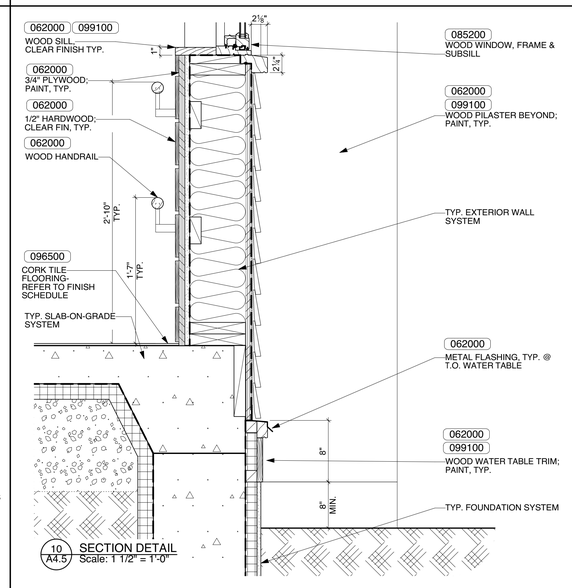

10 A4.5 SECTION DETAIL
Scale: 1 1/2" = 1'-0"

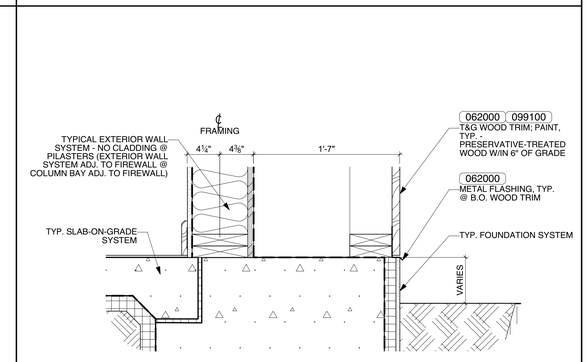

11 A4.5 SECTION DETAIL
Scale: 1 1/2" = 1'-0"

JOHNSON ROBERTS ASSOCIATES INC.
ARCHITECTS
15 PROPERZI WAY
SOMERVILLE, MA
02143-3228

Revisions:

CONCORD FREE PUBLIC LIBRARY EXPANSION

Sheet Title:

DETAILS

Date: 24-Oct-19 Drawn By: MEB

Scale: 1 1/2" = 1'-0" Project No.:1714

A4.5

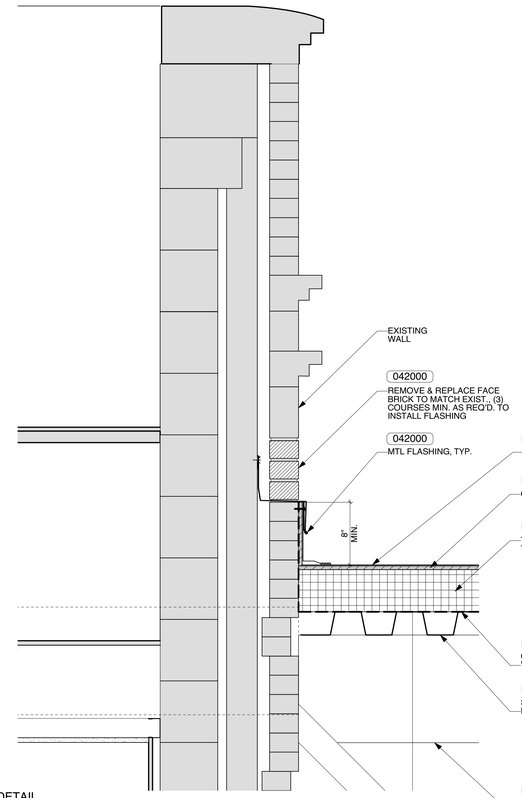

1 A4.6 SECTION DETAIL
Scale: 1 1/2" = 1'-0"

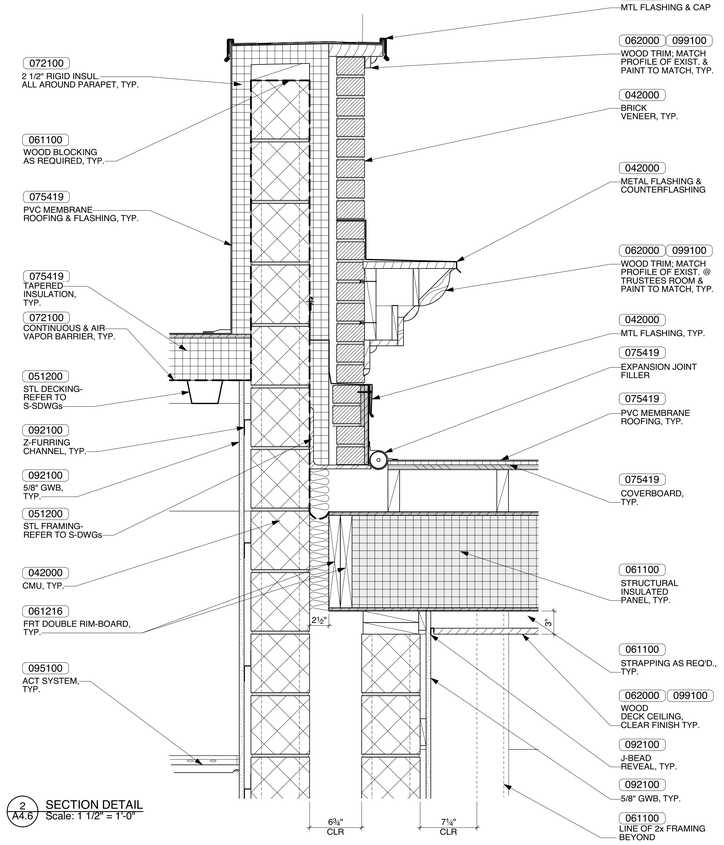

2 A4.6 SECTION DETAIL
Scale: 1 1/2" = 1'-0"

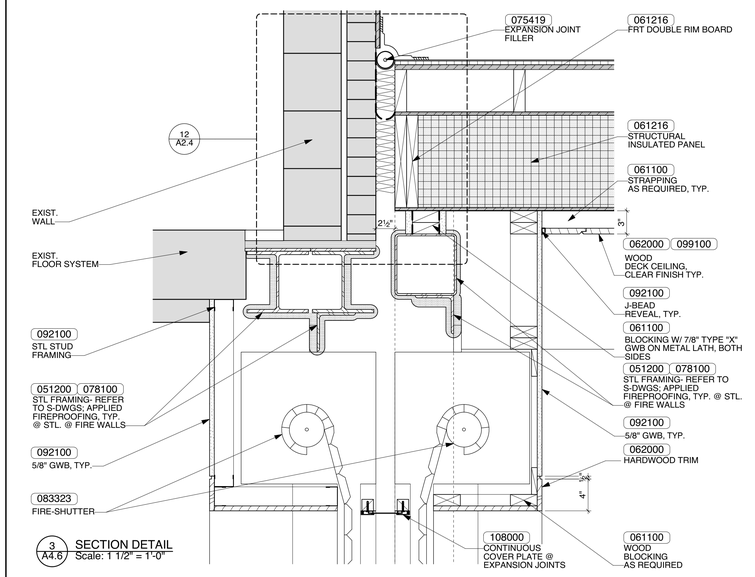

3 A4.6 SECTION DETAIL
Scale: 1 1/2" = 1'-0"

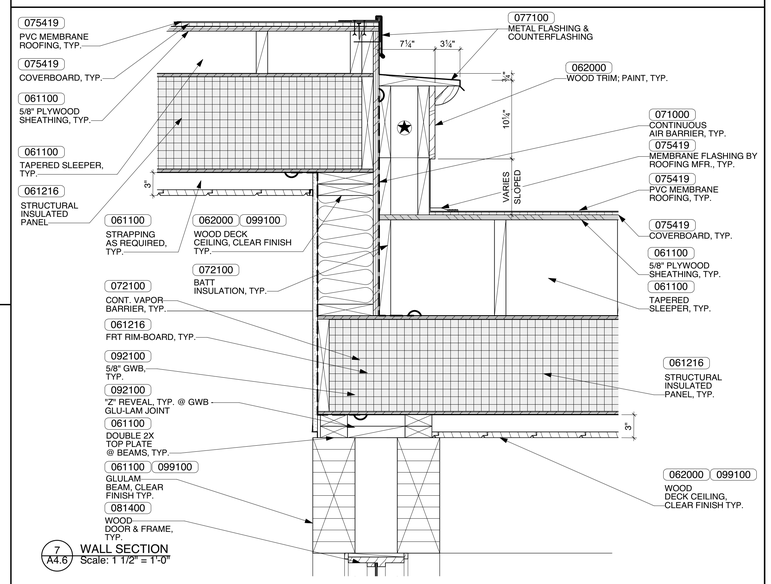

7 A4.6 WALL SECTION
Scale: 1 1/2" = 1'-0"

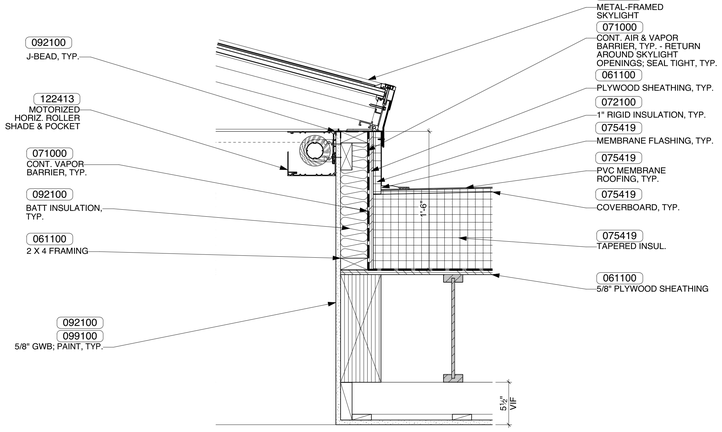

4 A4.6 SECTION DETAIL
Scale: 1 1/2" = 1'-0"

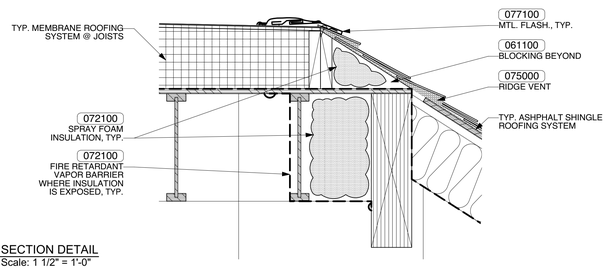

5 A4.6 SECTION DETAIL
Scale: 1 1/2" = 1'-0"

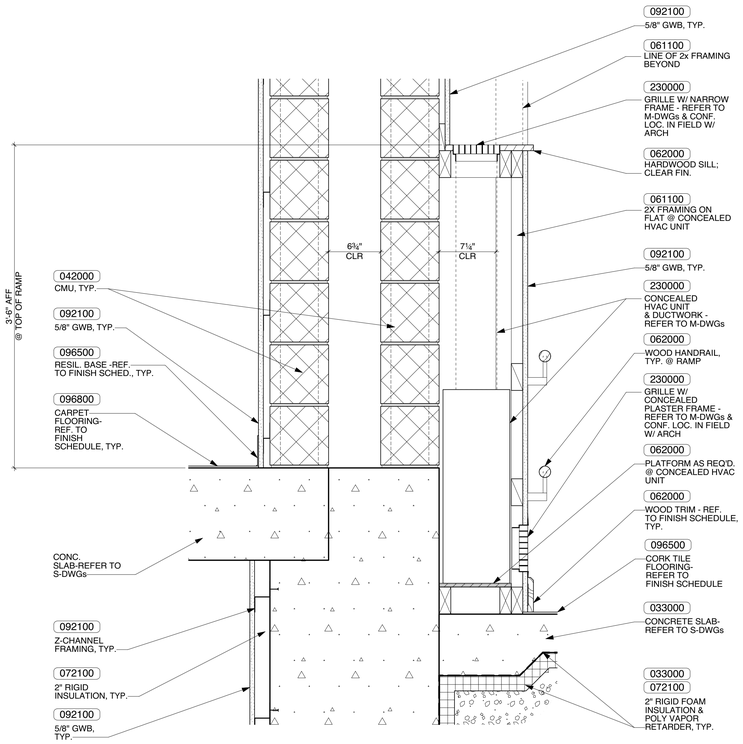

6 A4.7 SECTION DETAIL
Scale: 1 1/2" = 1'-0"

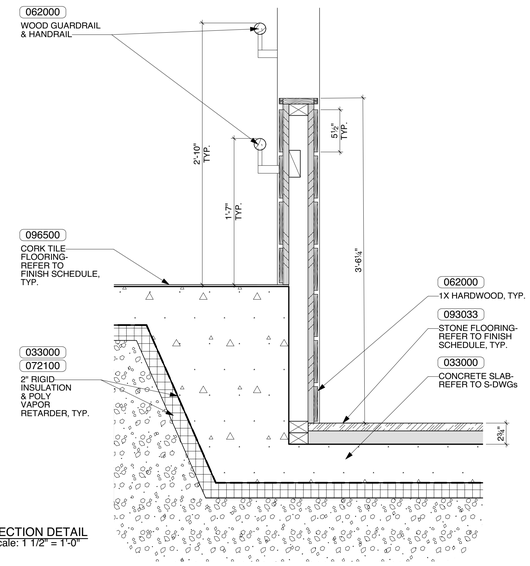

8 A4.6 SECTION DETAIL
Scale: 1 1/2" = 1'-0"

JOHNSON ROBERTS ASSOCIATES INC.
ARCHITECTS
15 PROPERZI WAY
SOMERVILLE, MA
02143-3228

Revisions:

CONCORD FREE PUBLIC LIBRARY EXPANSION

Sheet Title:

DETAILS

Date: 24-Oct-19 Drawn By: MEB

Scale: 1 1/2" = 1'-0" Project No.: 1714

A4.6

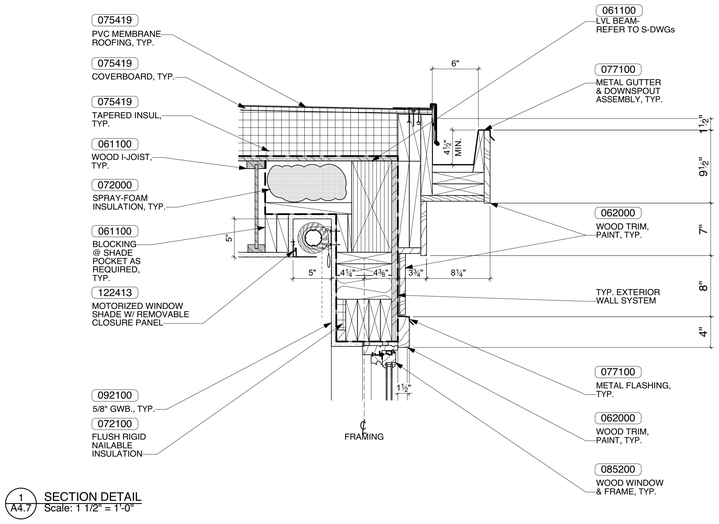

1 A4.7 SECTION DETAIL
Scale: 1 1/2" = 1'-0"

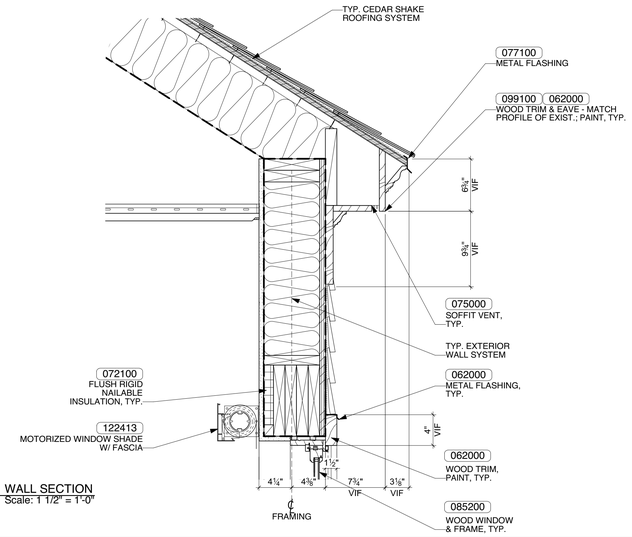

2 A4.7 WALL SECTION
Scale: 1 1/2" = 1'-0"

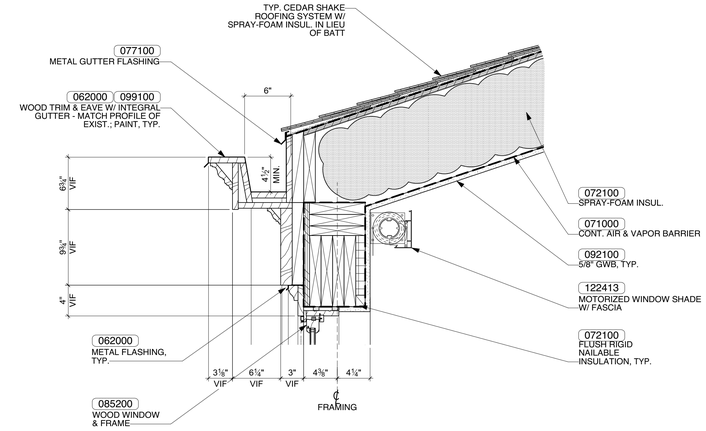

3 A4.7 SECTION DETAIL
Scale: 1 1/2" = 1'-0"

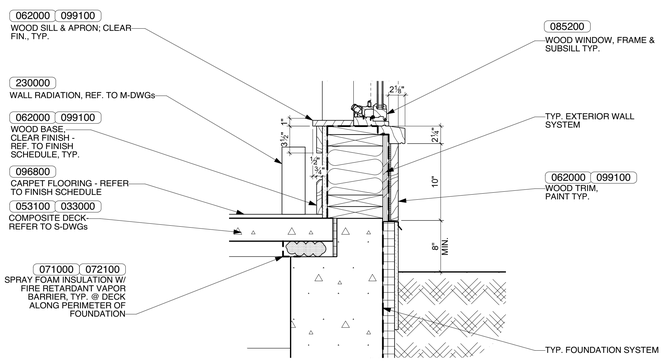

4 A4.7 SECTION DETAIL
Scale: 1 1/2" = 1'-0"

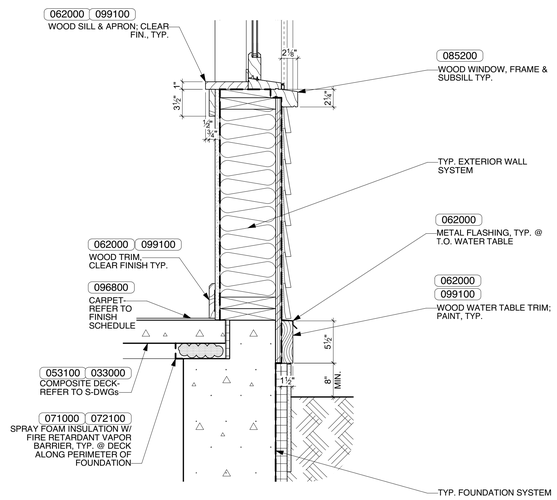

5 A4.7 WALL SECTION
Scale: 1 1/2" = 1'-0"

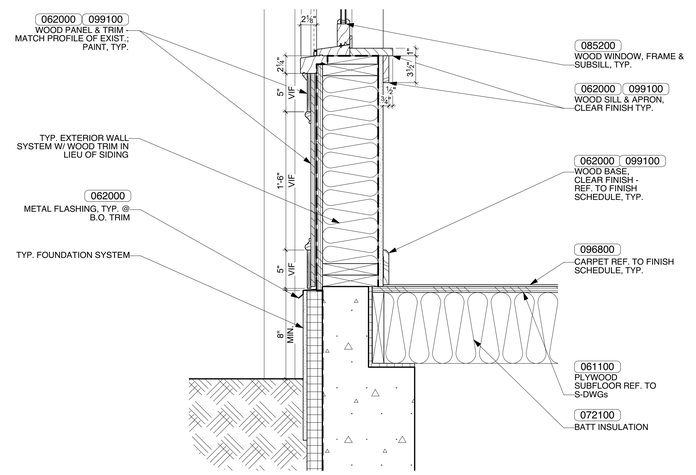

6 A4.7 SECTION DETAIL
Scale: 1 1/2" = 1'-0"

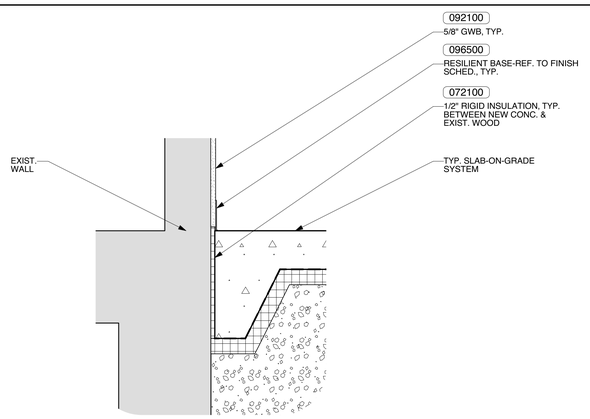

7 A4.7 SECTION DETAIL
Scale: 1 1/2" = 1'-0"

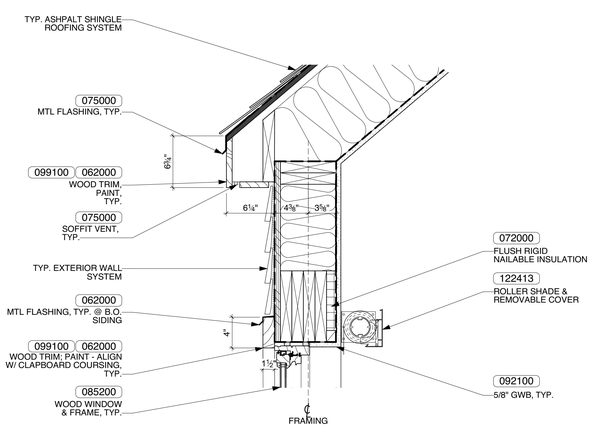

8 A4.7 SECTION DETAIL
Scale: 1 1/2" = 1'-0"

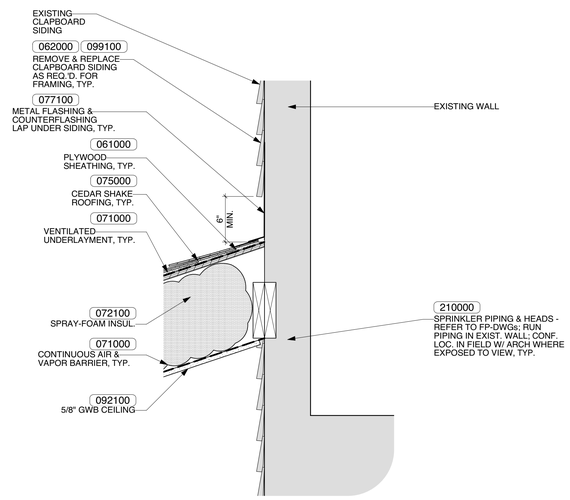

9 A4.7 SECTION DETAIL
Scale: 1 1/2" = 1'-0"

JOHNSON ROBERTS ASSOCIATES INC.
ARCHITECTS
15 PROPERZI WAY
SOMERVILLE, MA
02143-3228

Revisions:

CONCORD FREE PUBLIC LIBRARY EXPANSION

Sheet Title:

DETAILS

Date: 24-Oct-19 Drawn By: MEB

Scale: 1 1/2" = 1'-0" Project No.: 1714

A4.7

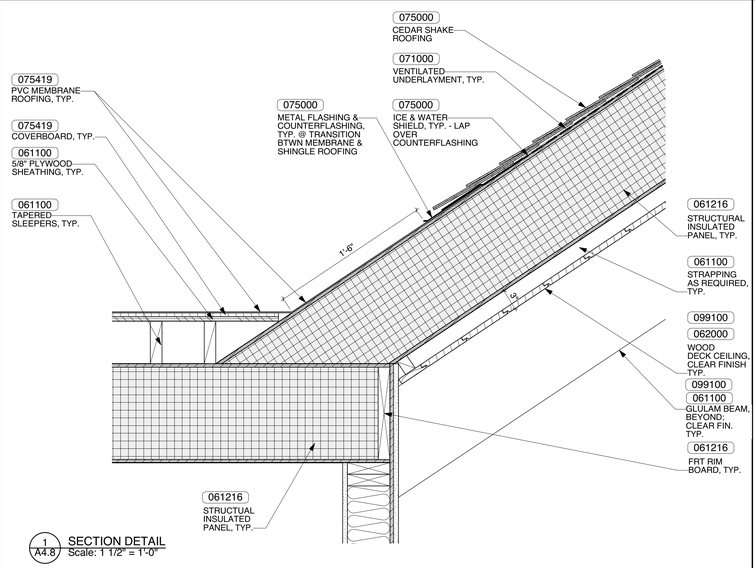

1 A4.8 SECTION DETAIL
Scale: 1 1/2" = 1'-0"

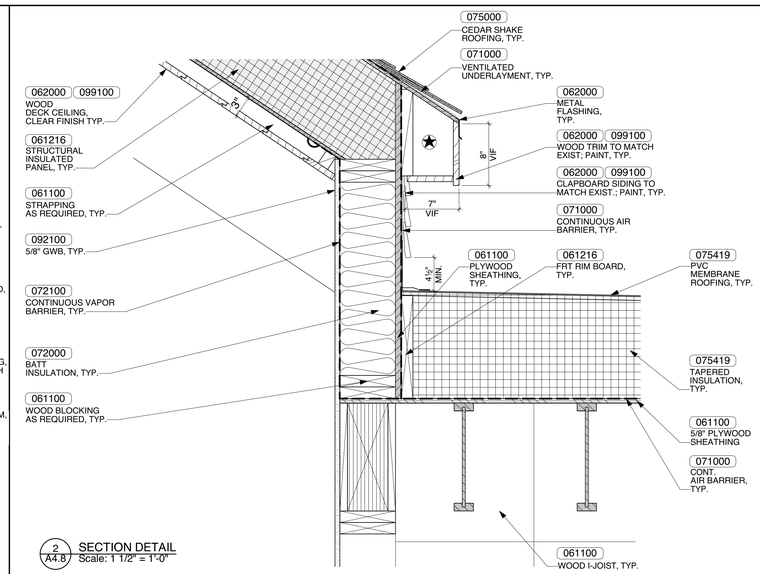

2 A4.8 SECTION DETAIL
Scale: 1 1/2" = 1'-0"

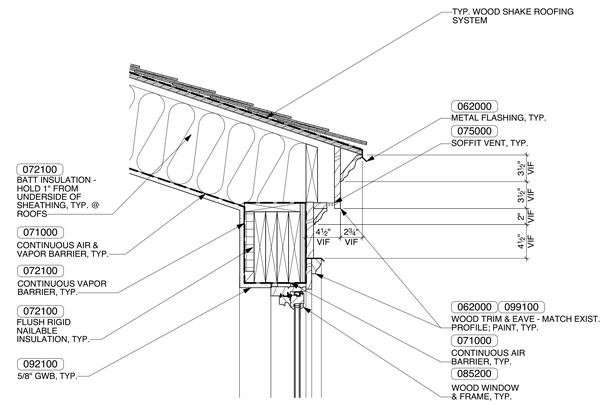

3 A4.8 SECTION DETAIL
Scale: 1 1/2" = 1'-0"

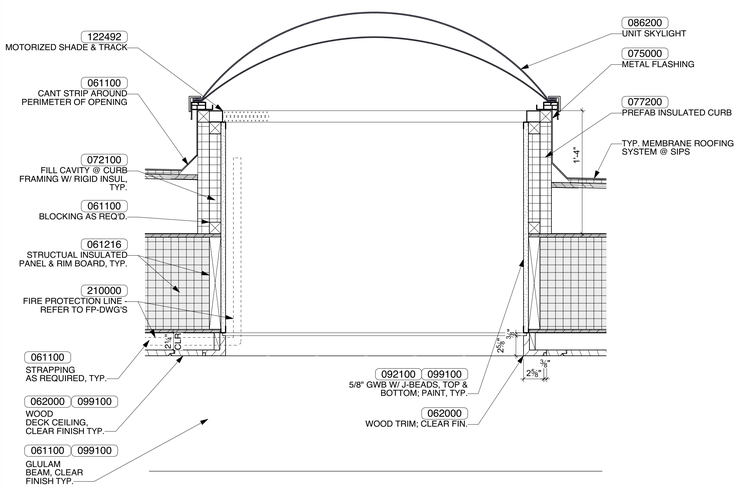

4 A4.8 SECTION DETAIL
Scale: 1 1/2" = 1'-0"

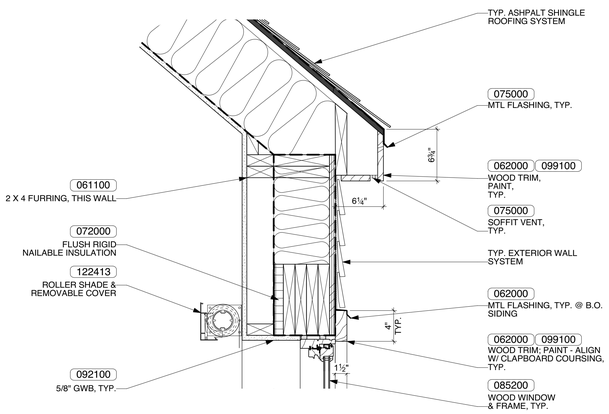

5 A4.8 SECTION DETAIL
Scale: 1 1/2" = 1'-0"

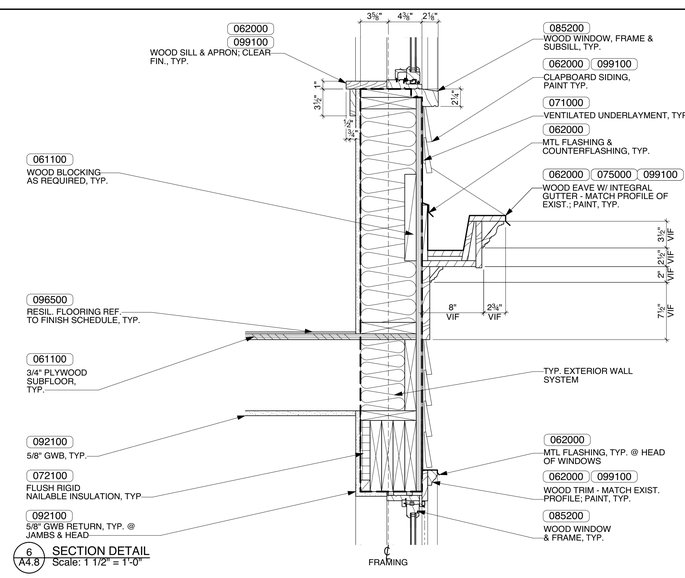

6 A4.8 SECTION DETAIL
Scale: 1 1/2" = 1'-0"

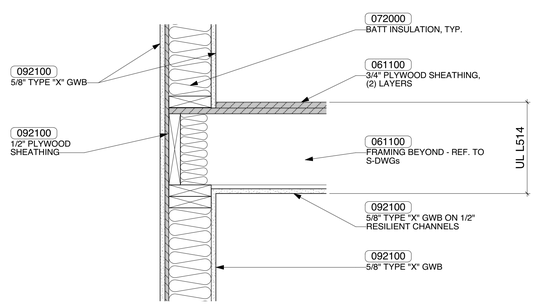

7 A4.8 SECTION DETAIL
Scale: 1 1/2" = 1'-0"

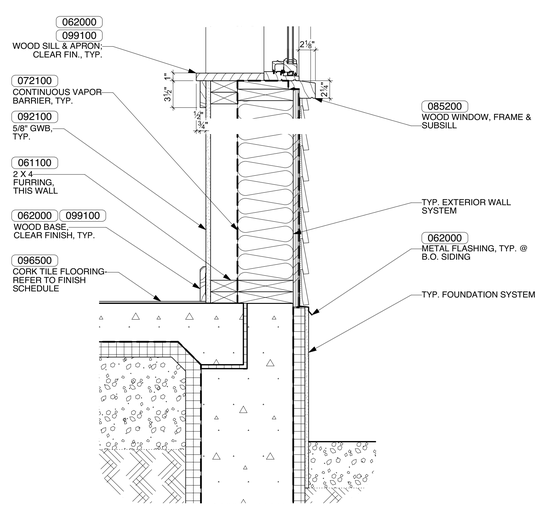

8 A4.8 SECTION DETAIL
Scale: 1 1/2" = 1'-0"

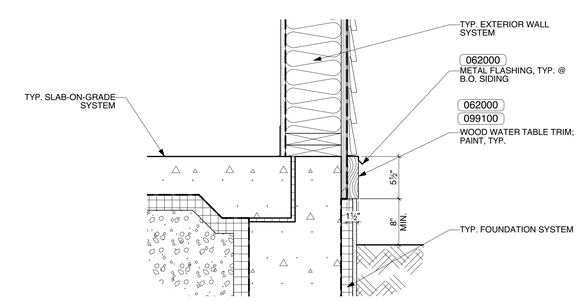

9 A4.8 SECTION DETAIL
Scale: 1 1/2" = 1'-0"

JOHNSON ROBERTS ASSOCIATES INC.
ARCHITECTS
15 PROPERZI WAY
SOMERVILLE, MA
02143-3228

Revisions:

CONCORD FREE PUBLIC LIBRARY EXPANSION

Sheet Title:
DETAILS

Date: 24-Oct-19 Drawn By: MEB

Scale: 1 1/2" = 1'-0" Project No.: 1714

A4.8

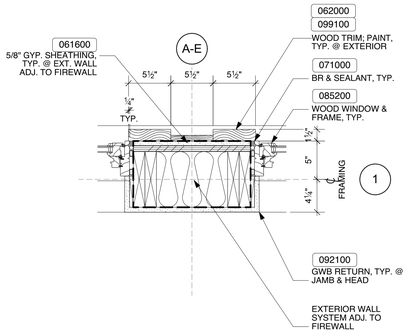

1 A4.10 PLAN DETAIL
Scale: 1 1/2" = 1'-0"

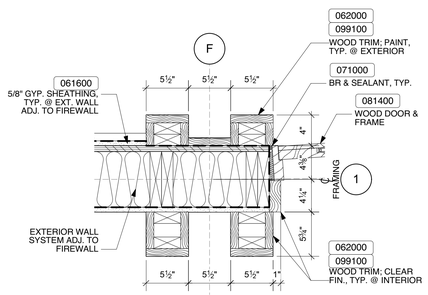

2 A4.10 PLAN DETAIL
Scale: 1 1/2" = 1'-0"

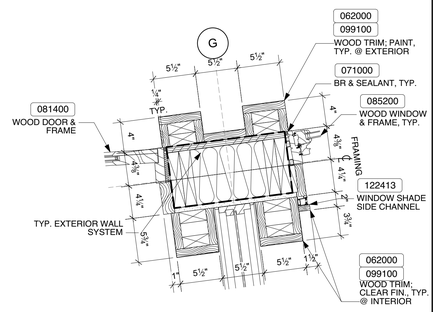

3 A4.10 PLAN DETAIL
Scale: 1 1/2" = 1'-0"

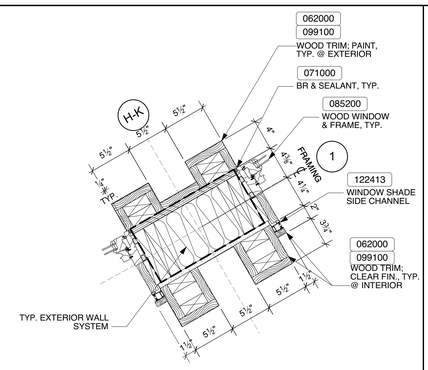

4 A4.10 PLAN DETAIL
Scale: 1 1/2" = 1'-0"

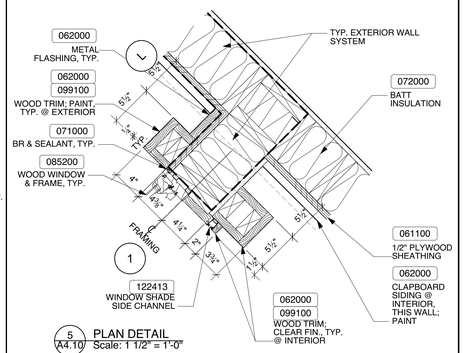

5 A4.10 PLAN DETAIL
Scale: 1 1/2" = 1'-0"

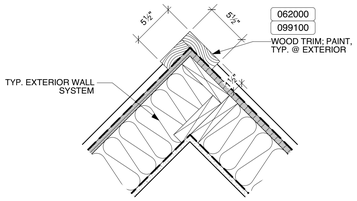

6 A4.10 TYP. OUTSIDE CORNER PLAN DETAIL
Scale: 1 1/2" = 1'-0"

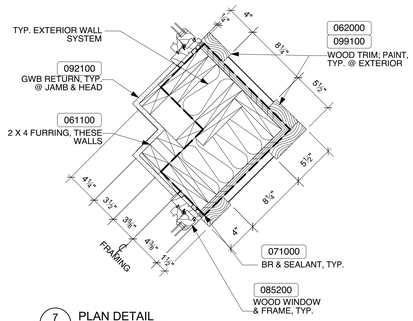

7 A4.10 PLAN DETAIL
Scale: 1 1/2" = 1'-0"

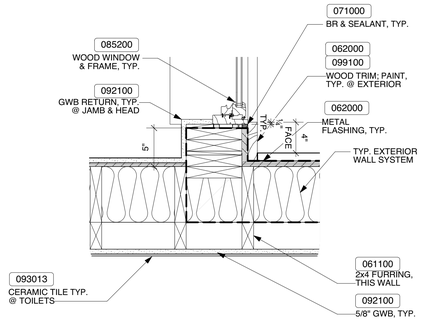

8 A4.10 PLAN DETAIL
Scale: 1 1/2" = 1'-0"

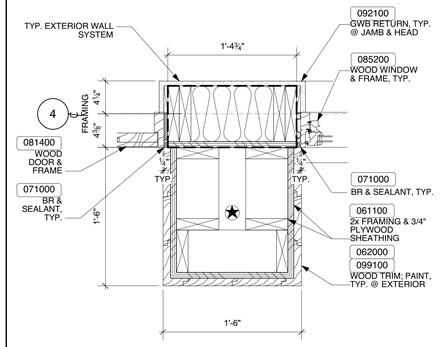

9 A4.10 PLAN DETAIL
Scale: 1 1/2" = 1'-0"

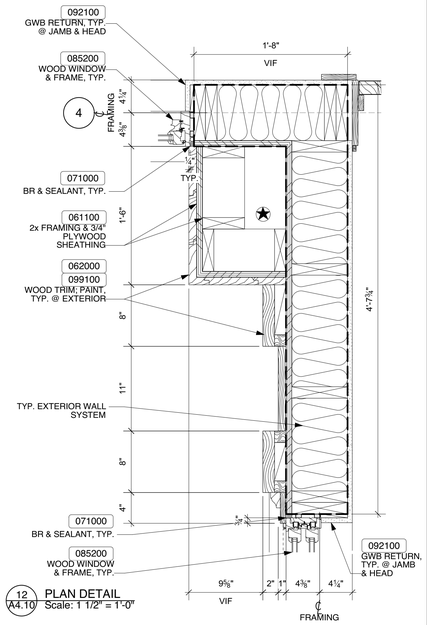

12 A4.10 PLAN DETAIL
Scale: 1 1/2" = 1'-0"

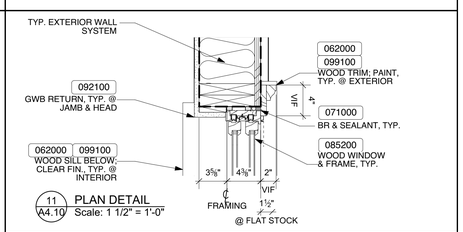

11 A4.10 PLAN DETAIL
Scale: 1 1/2" = 1'-0"

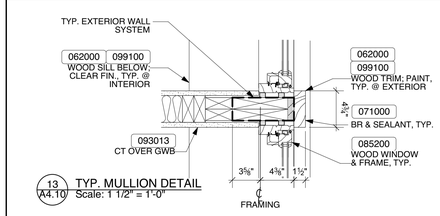

13 A4.10 TYP. MULLION DETAIL
Scale: 1 1/2" = 1'-0"

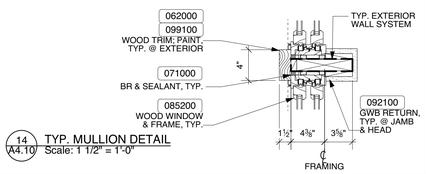

14 A4.10 TYP. MULLION DETAIL
Scale: 1 1/2" = 1'-0"

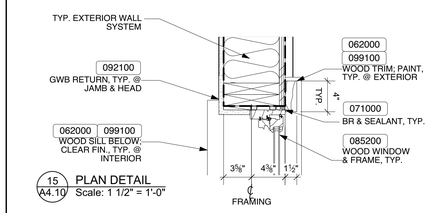

15 A4.10 PLAN DETAIL
Scale: 1 1/2" = 1'-0"

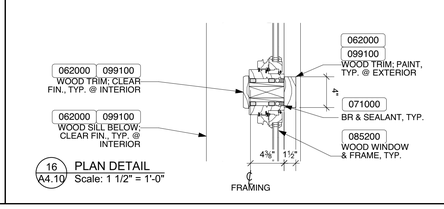

16 A4.10 PLAN DETAIL
Scale: 1 1/2" = 1'-0"

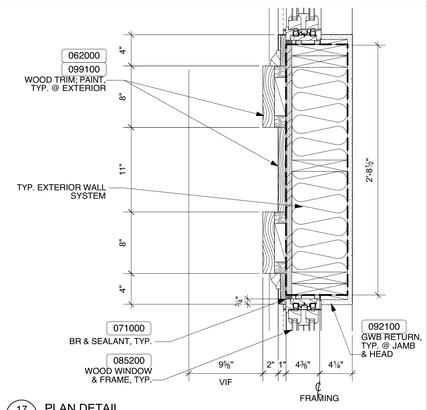

17 A4.10 PLAN DETAIL
Scale: 1 1/2" = 1'-0"

JOHNSON ROBERTS ASSOCIATES INC.
ARCHITECTS
15 PROPERZI WAY
SOMERVILLE, MA
02143-3228

Revisions:

CONCORD FREE PUBLIC LIBRARY EXPANSION

Sheet Title:

PLAN DETAILS

Date: 24-Oct-19 Drawn By: MEB

Scale: 1 1/2" = 1'-0" Project No.: 1714

A4.10

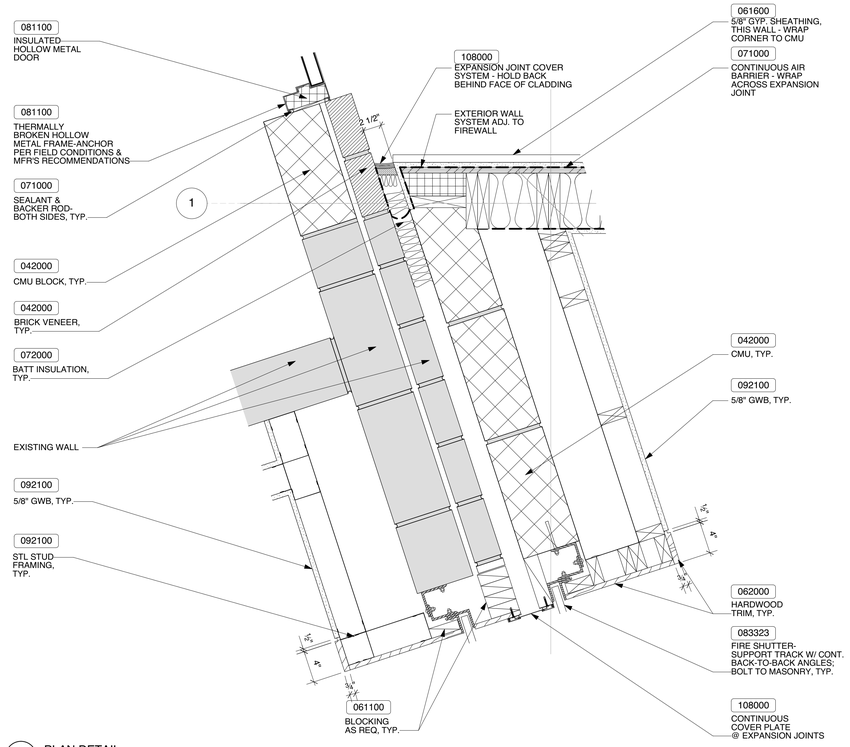

1 A4.11 PLAN DETAIL
Scale: 1 1/2" = 1'-0"

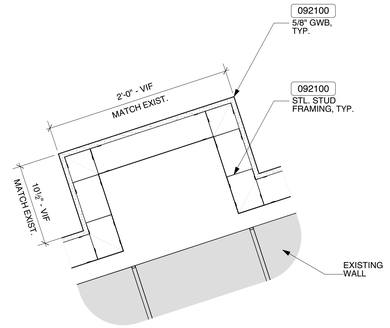

2 A4.11 PLAN DETAIL
Scale: 1 1/2" = 1'-0"

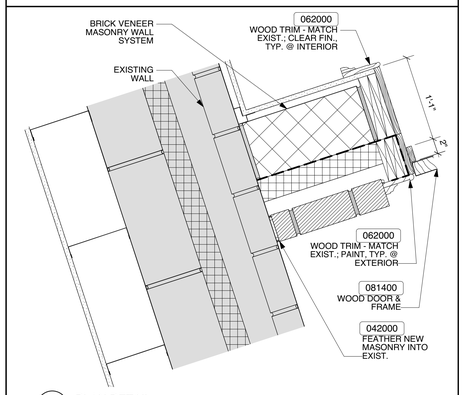

3 A4.11 PLAN DETAIL
Scale: 1 1/2" = 1'-0"

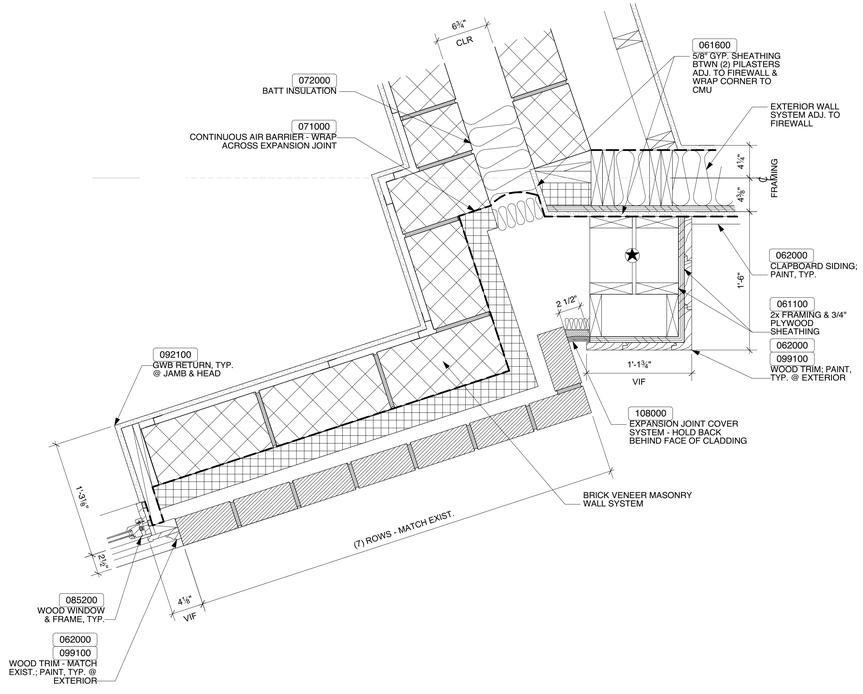

4 A4.11 PLAN DETAIL
Scale: 1 1/2" = 1'-0"

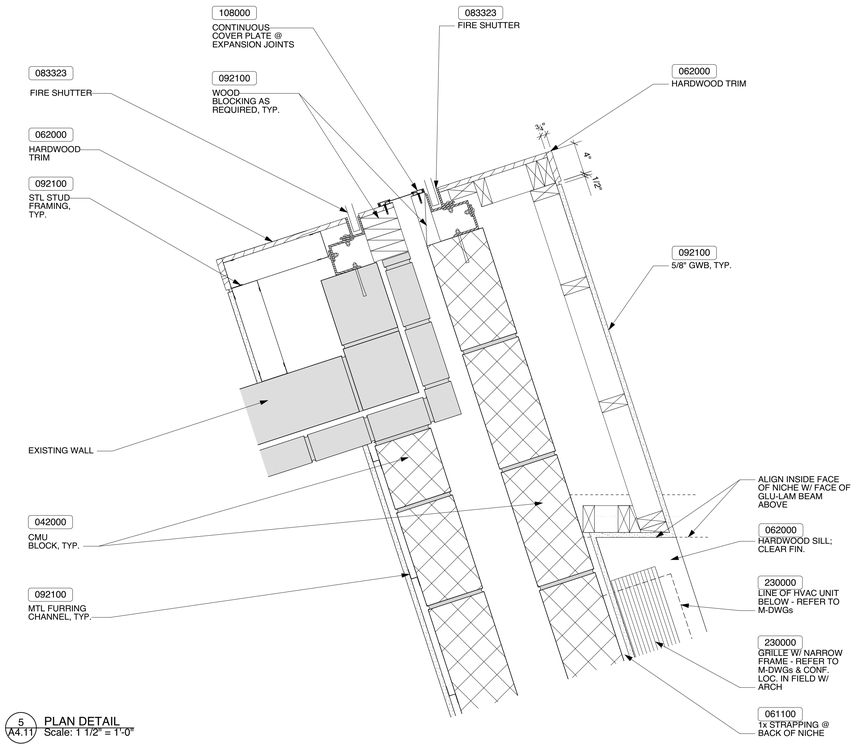

5 A4.11 PLAN DETAIL
Scale: 1 1/2" = 1'-0"

JOHNSON ROBERTS ASSOCIATES INC.
ARCHITECTS
15 PROPERZI WAY
SOMERVILLE, MA
02143-3228

Revisions:

CONCORD FREE PUBLIC LIBRARY EXPANSION

Sheet Title:

PLAN DETAILS

Date: 24-Oct-19 Drawn By: MEB

Scale: 1 1/2" = 1'-0" Project No.: 1714

A4.11

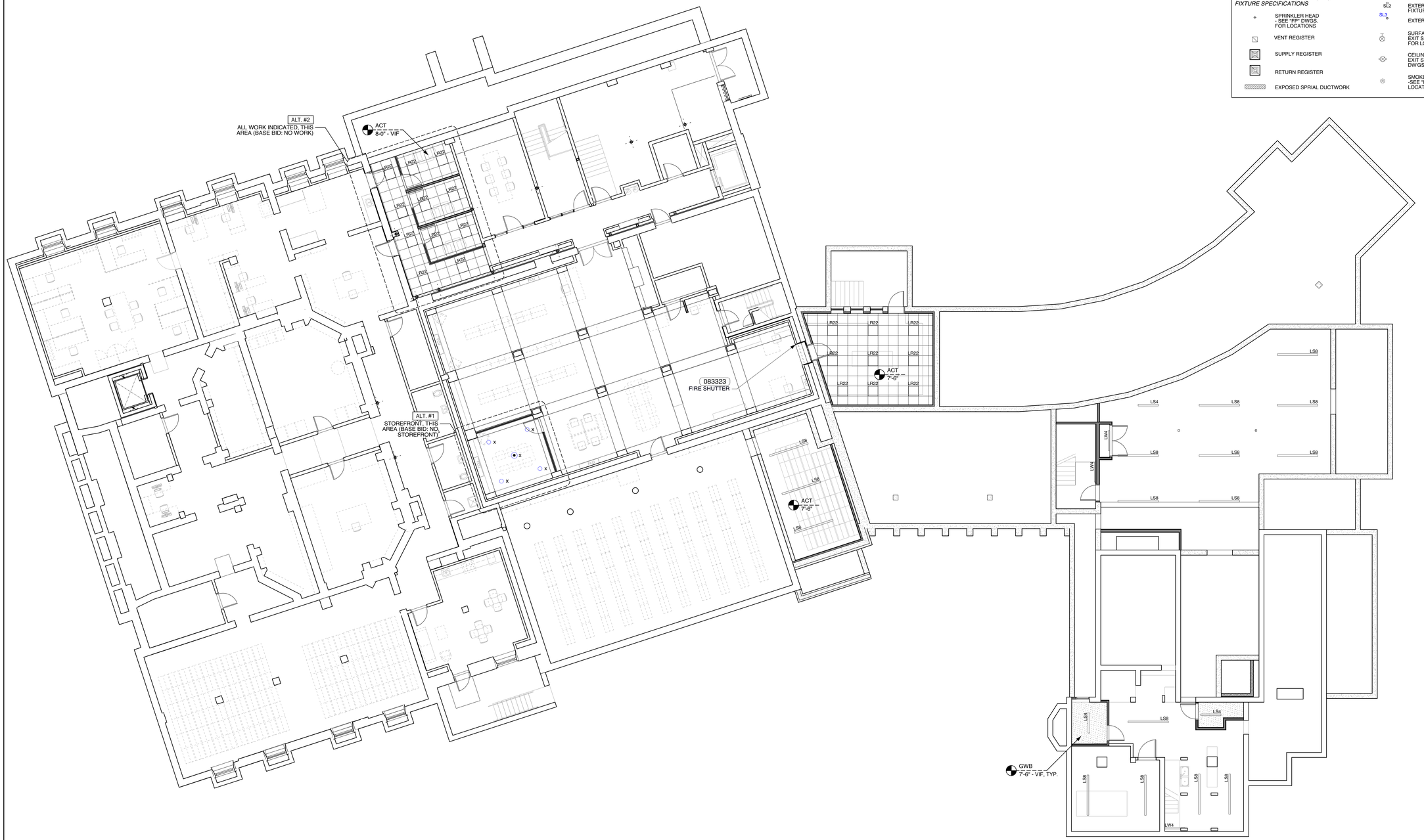

1 / A5.1 BASEMENT RCP
Scale: 1/8" = 1'-0"

LEGEND:

NEW ACOUSTICAL CEILING TILE

NEW GWB CEILING

NEW WOOD DECK CEILING

CEILING HEIGHT - NEW ELEVATION AFF

CEILING HEIGHT - EXISTING TO REMAIN ELEVATION AFF

SEE M & FP DWG'S. FOR SPECIFIC FIXTURE SPECIFICATIONS

SPRINKLER HEAD - SEE "FP" DWGS. FOR LOCATIONS

VENT REGISTER

SUPPLY REGISTER

RETURN REGISTER

EXPOSED SPRIAL DUCTWORK

SEE ELEC. DWG'S. FOR SPECIFIC FIXTURE SPECIFICATIONS

LR22 — 2X2 FIXTURE

LW4 — WALL FIXTURE - NUMBER INDICATES LENGTH IN FEET

LS4 — LINEAR FIXTURE - NUMBER INDICATES LENGTH IN FEET

FD1 — FLAT DOWNLIGHT

RC1 — RECESSED WALL WASH FIXTURE

SM1 — SURFACE-MOUNTED FIXTURE

P1 — PENDANT FIXTURE - NUMBER INDICATES DIAMETER

WS1 — WALL SCONCE

LP8 — LINEAR PENDANT FIXTURE - NUMBER INDICATES LENGTH IN FEET

SL2 — EXTERIOR RECESSED FIXTURE

SL3 — EXTERIOR UPLIGHT FIXTURE

SURFACE MOUNTED EXIT SIGN - SEE "E" DW'GS FOR LOCATIONS

CEILING MOUNTED EXIT SIGN - SEE "E" DW'GS FOR LOCATIONS

SMOKE/HEAT DETECTOR -SEE "E" DW'GS FOR LOCATIONS

JOHNSON ROBERTS ASSOCIATES INC.
ARCHITECTS
15 PROPERZI WAY
SOMERVILLE, MA
02143-3228

S
E W
PROJECT NORTH

Revisions:

CONCORD FREE PUBLIC LIBRARY EXPANSION

Sheet Title:

BASEMENT RCP

Date: 24-Oct-19 Drawn By: MEB

Scale: 1/8" = 1'-0" Project No.: 1714

A5.1

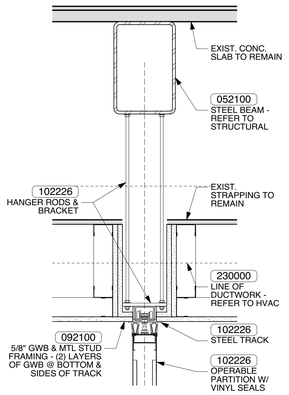

2 / A5.2 OPERABLE PARTITION HEAD DETAIL
Scale: 1 1/2" = 1'-0"

NOTES:

1. PROVIDE MOTORIZED ROLLER SHADES AT ALL NEW WINDOWS - COORD. W/ ELEC.
2. PROVIDE MANUAL ROLLER SHADES AT ALL EXISTING WINDOWS UON.
3. PROVIDE ROLLER SHADE FASCIA AT ALL WINDOWS UNLESS POCKET INDICATED - REFER TO DETAILS.
4. EXTEND ROLLER SHADE 1" PAST JAMB ON ALL WINDOWS UON.

LEGEND:

NEW ACOUSTICAL CEILING TILE
NEW GWB CEILING
NEW WOOD DECK CEILING
CEILING HEIGHT - NEW ELEVATION AFF
CEILING HEIGHT - EXISTING TO REMAIN ELEVATION AFF

SEE M & FP DWG'S. FOR SPECIFIC FIXTURE SPECIFICATIONS

SPRINKLER HEAD - SEE "FP" DWGS. FOR LOCATIONS
VENT REGISTER
SUPPLY REGISTER
RETURN REGISTER
EXPOSED SPRIAL DUCTWORK

SEE ELEC. DWG'S. FOR SPECIFIC FIXTURE SPECIFICATIONS

LR22 — 2X2 FIXTURE
LW4 — WALL FIXTURE - NUMBER INDICATES LENGTH IN FEET
LS4 — LINEAR FIXTURE - NUMBER INDICATES LENGTH IN FEET
FD1 — FLAT DOWNLIGHT
RC1 — RECESSED WALL WASH FIXTURE
SM1 — SURFACE-MOUNTED FIXTURE
P1 — PENDANT FIXTURE - NUMBER INDICATES DIAMETER
WS1 — WALL SCONCE
LP8 — LINEAR PENDANT FIXTURE - NUMBER INDICATES LENGTH IN FEET
SL2 — EXTERIOR RECESSED FIXTURE
SL3 — EXTERIOR UPLIGHT FIXTURE
SURFACE MOUNTED EXIT SIGN - SEE "E" DWGS FOR LOCATIONS
CEILING MOUNTED EXIT SIGN - SEE "E" DWGS FOR LOCATIONS
SMOKE/HEAT DETECTOR -SEE "E" DWGS FOR LOCATIONS

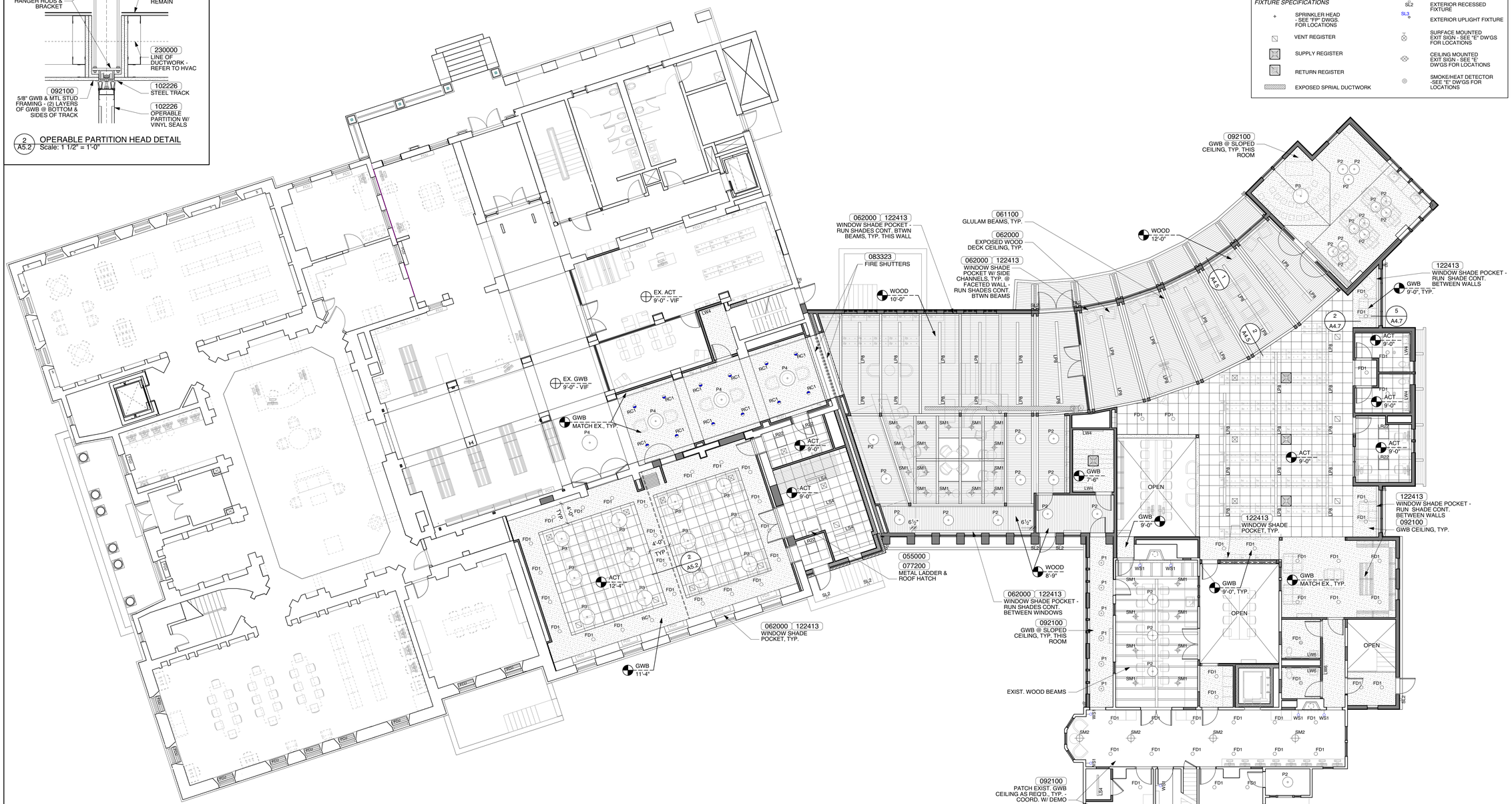

1 / A5.2 GROUND FLOOR RCP
Scale: 1/8" = 1'-0"

JOHNSON ROBERTS ASSOCIATES INC.
ARCHITECTS

15 PROPERZI WAY
SOMERVILLE, MA
02143-3228

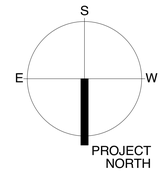

Revisions:

CONCORD FREE PUBLIC LIBRARY EXPANSION

Sheet Title:
GROUND FLOOR RCP

Date: 24-Oct-19 Drawn By: MEB
Scale: 1/8" = 1'-0" Project No.: 1714

A5.2

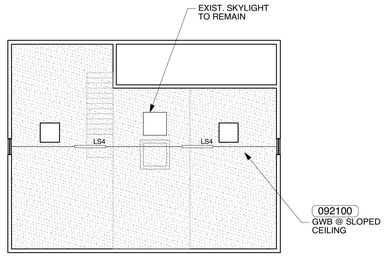

2 A5.3 THIRD FLOOR RCP
Scale: 1/8" = 1'-0"

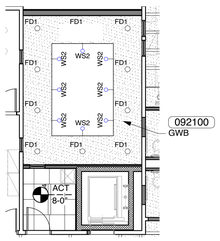

3 A5.3 SECOND FLOOR PART RCP - ALT. #3
Scale: 1/8" = 1'-0"

NOTES:

1. PROVIDE MOTORIZED ROLLER SHADES AT ALL NEW WINDOWS - COORD. W/ ELEC.
2. PROVIDE MANUAL ROLLER SHADES AT ALL EXISTING WINDOWS UON.
3. PROVIDE ROLLER SHADE FASCIA AT ALL WINDOWS UNLESS POCKET INDICATED - REFER TO DETAILS.
4. EXTEND ROLLER SHADE 1" PAST JAMB ON ALL WINDOWS UON.

LEGEND:

NEW ACOUSTICAL CEILING TILE
NEW GWB CEILING
NEW WOOD DECK CEILING
CEILING HEIGHT - NEW ELEVATION AFF
CEILING HEIGHT - EXISTING TO REMAIN ELEVATION AFF

SEE M & FP DWG'S. FOR SPECIFIC FIXTURE SPECIFICATIONS

SPRINKLER HEAD - SEE "FP" DWGS. FOR LOCATIONS
VENT REGISTER
SUPPLY REGISTER
RETURN REGISTER
EXPOSED SPRIAL DUCTWORK

SEE ELEC. DWG'S. FOR SPECIFIC FIXTURE SPECIFICATIONS

LR22 — 2X2 FIXTURE
LW4 — WALL FIXTURE - NUMBER INDICATES LENGTH IN FEET
LS4 — LINEAR FIXTURE - NUMBER INDICATES LENGTH IN FEET
FD1 — FLAT DOWNLIGHT
RC1 — RECESSED WALL WASH FIXTURE
SM1 — SURFACE-MOUNTED FIXTURE
P1 — PENDANT FIXTURE - NUMBER INDICATES DIAMETER
WS1 — WALL SCONCE
LP8 — LINEAR PENDANT FIXTURE - NUMBER INDICATES LENGTH IN FEET
SL2 — EXTERIOR RECESSED FIXTURE
SL3 — EXTERIOR UPLIGHT FIXTURE
SURFACE MOUNTED EXIT SIGN - SEE "E" DW'GS FOR LOCATIONS
CEILING MOUNTED EXIT SIGN - SEE "E" DW'GS FOR LOCATIONS
SMOKE/HEAT DETECTOR -SEE "E" DW'GS FOR LOCATIONS

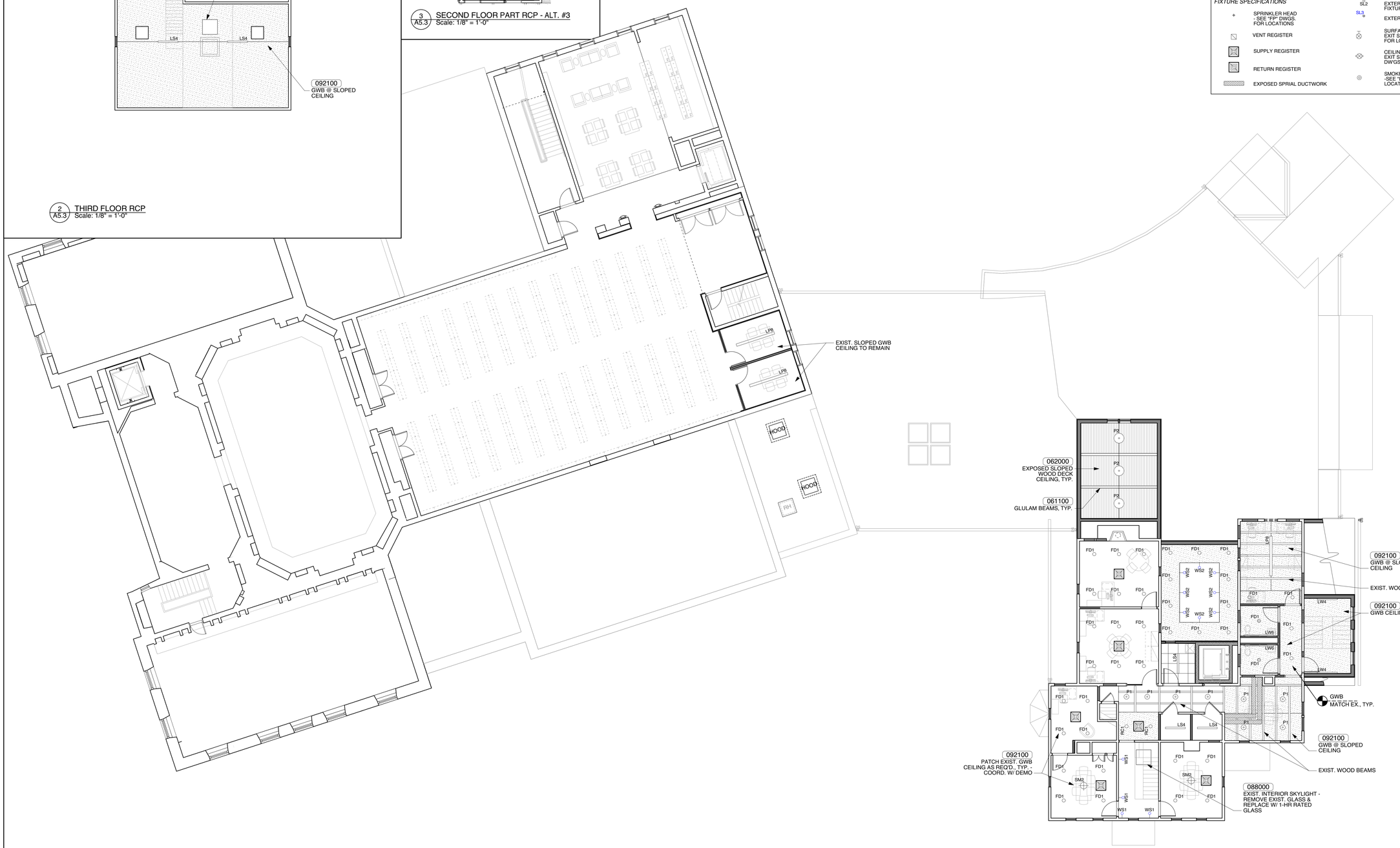

1 A5.3 SECOND FLOOR RCP
Scale: 1/8" = 1'-0"

JOHNSON ROBERTS ASSOCIATES INC.
ARCHITECTS
15 PROPERZI WAY
SOMERVILLE, MA
02143-3228

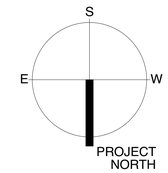

Revisions:

CONCORD FREE PUBLIC LIBRARY EXPANSION

Sheet Title:
SECOND & THIRD FLOOR RCP

Date: 24-Oct-19 Drawn By: MEB

Scale: 1/8" = 1'-0" Project No.: 1714

A5.3

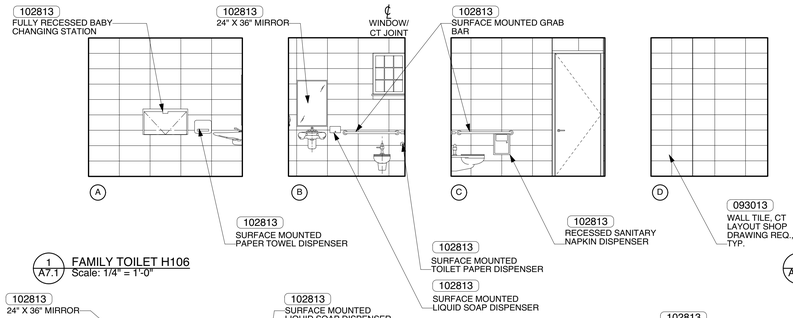

1 A7.1 FAMILY TOILET H106
Scale: 1/4" = 1'-0"

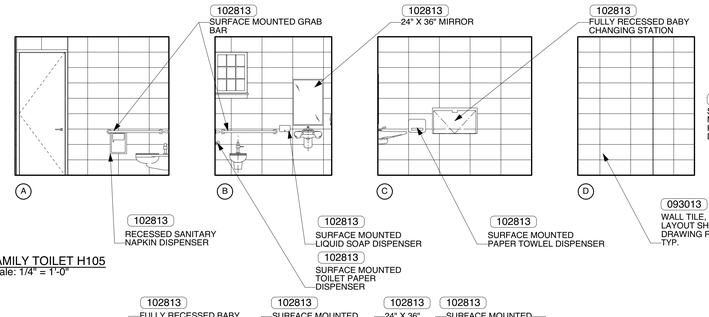

2 A7.1 FAMILY TOILET H105
Scale: 1/4" = 1'-0"

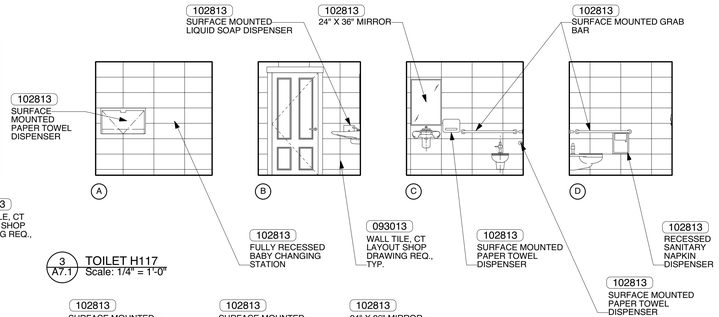

3 A7.1 TOILET H117
Scale: 1/4" = 1'-0"

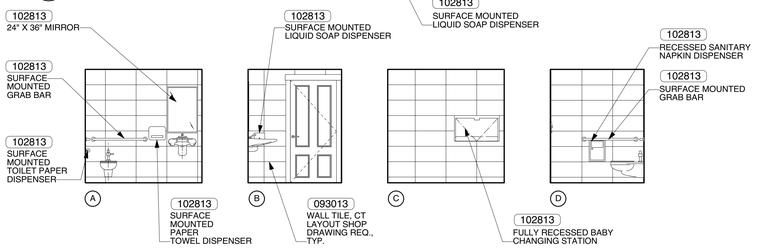

4 A7.1 TOILET H116
Scale: 1/4" = 1'-0"

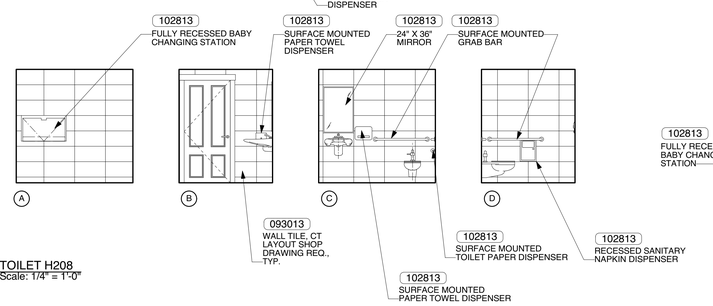

5 A7.1 TOILET H208
Scale: 1/4" = 1'-0"

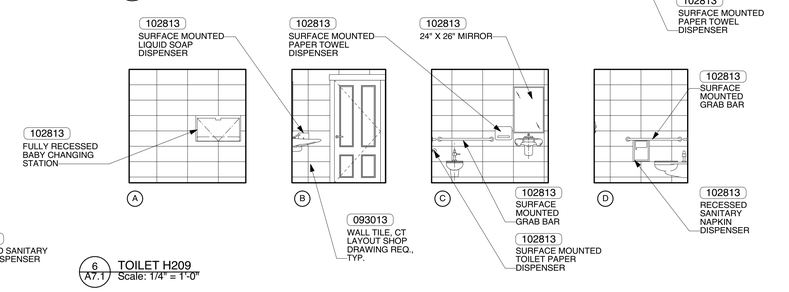

6 A7.1 TOILET H209
Scale: 1/4" = 1'-0"

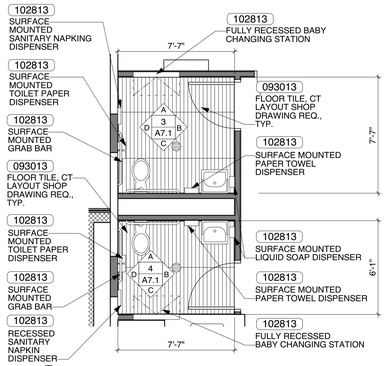

7 A7.1 TOILET ROOMS H116 & H117 ENLARGED PLANS
Scale: 1/4" = 1'-0"

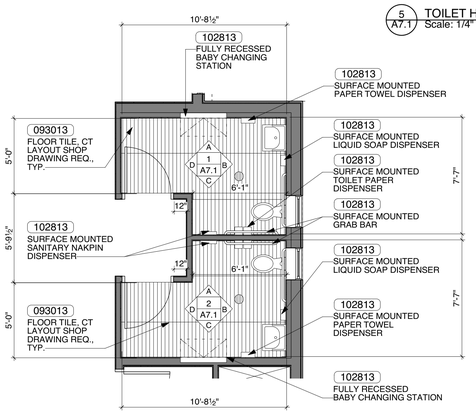

8 A7.1 FAMILY TOILET ROOMS H105 & H106 ENLARGED PLANS
Scale: 1/4" = 1'-0"

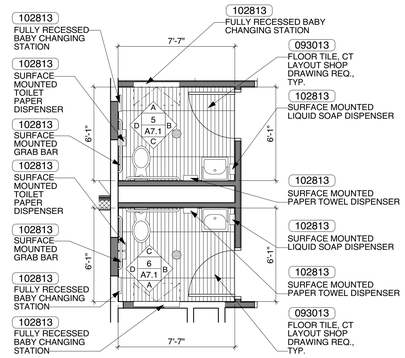

9 A7.1 TOILET ROOMS H208 & H209 ENLARGED PLANS
Scale: 1/4" = 1'-0"

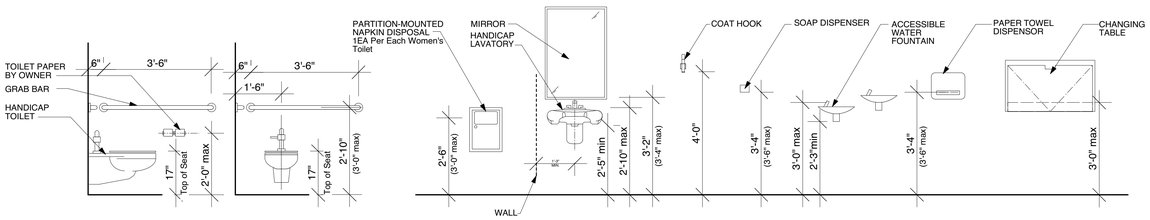

10 A7.1 MOUNTING HEIGHTS DIAGRAM
Scale: 1/2" = 1'-0"

JOHNSON ROBERTS ASSOCIATES INC.
ARCHITECTS
15 PROPERZI WAY
SOMERVILLE, MA
02143-3228

Revisions:

CONCORD FREE PUBLIC LIBRARY EXPANSION

Sheet Title:

TOILET ROOMS

Date: 24-Oct-19 Drawn By: MEB

Scale: 1/8" = 1'-0" Project No.: 1714

A7.1

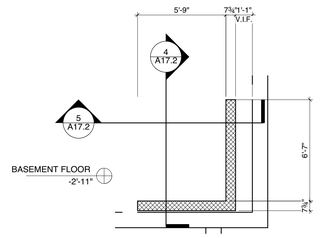

1 A7.2 ELEVATOR BASEMENT PLAN
Scale: 1/4" = 1'-0"

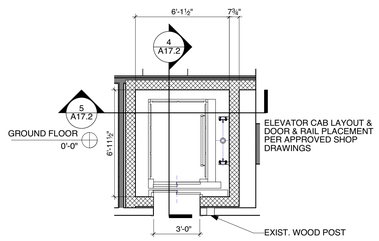

2 A7.2 GROUND FLOOR ELEVATOR PLAN
Scale: 1/4" = 1'-0"

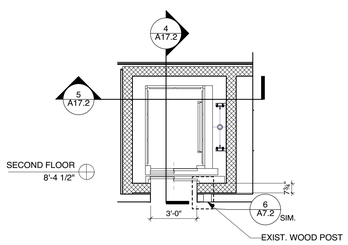

3 A7.2 SECOND FLOOR ELEVTOR PLAN
Scale: 1/4" = 1'-0"

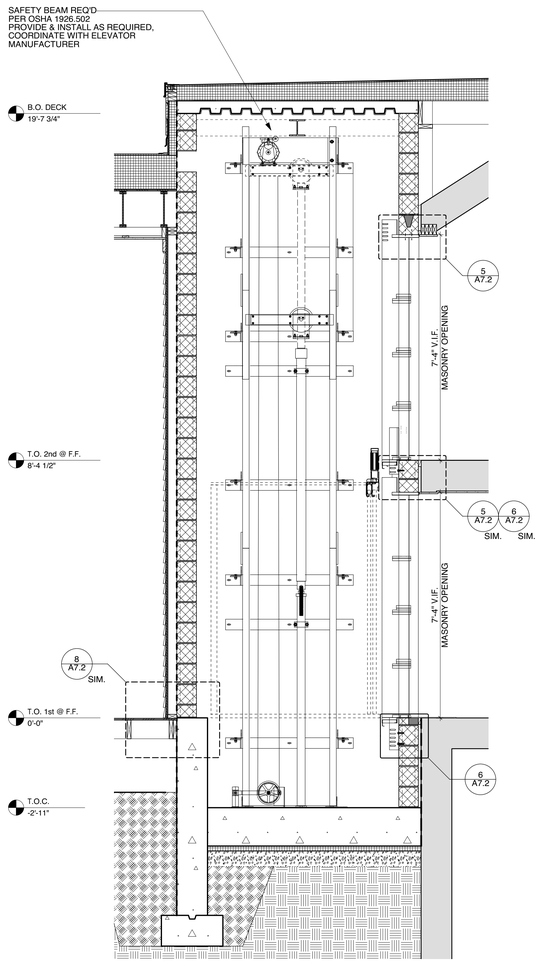

4 A7.2 ELEVATOR SECTION
Scale: 1/2" = 1'-0"

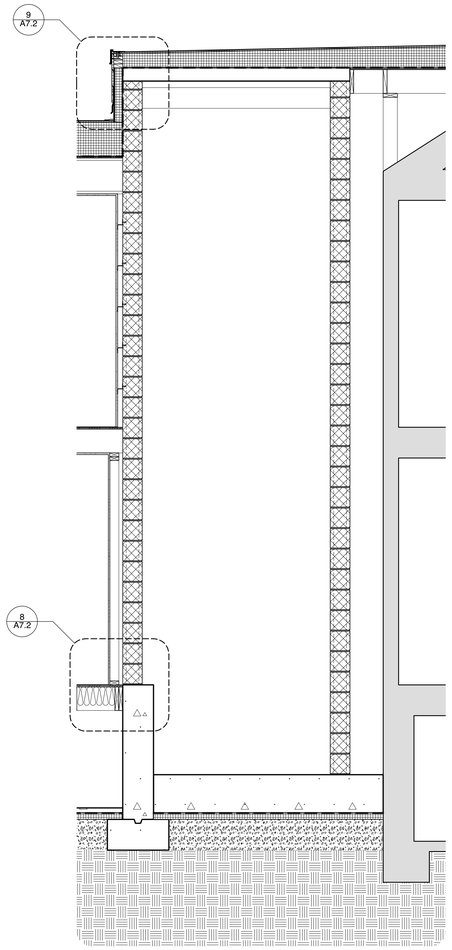

5 A7.2 ELEVATOR SECTION
Scale: 1/2" = 1'-0"

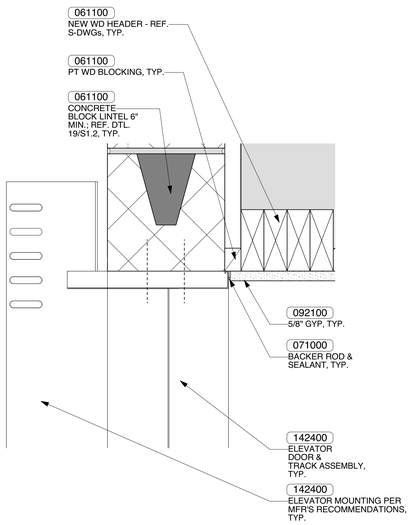

6 A7.2 SECTION DETAIL
Scale: 3" = 1'-0"

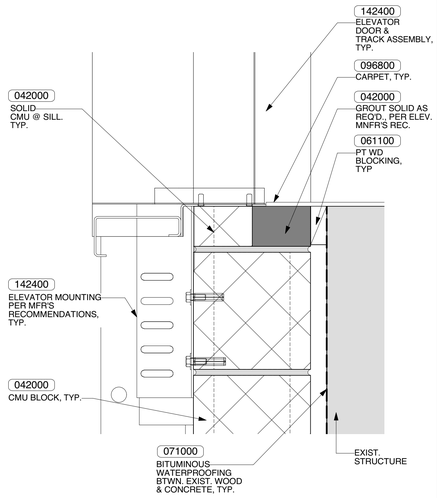

7 A7.2 SECTION DETAIL
Scale: 3" = 1'-0"

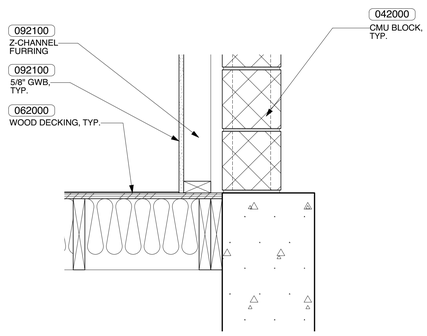

8 A7.2 SECTION DETAIL
Scale: 1 1/2" = 1'-0"

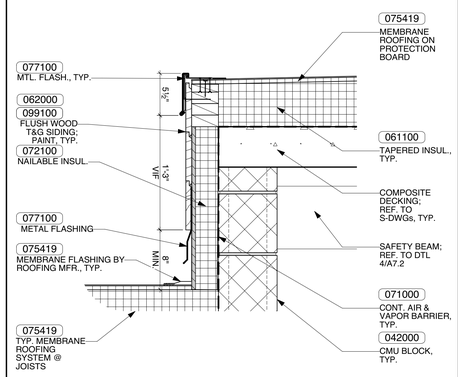

9 A7.2 SECTION DETAIL
Scale: 1 1/2" = 1'-0"

JOHNSON ROBERTS ASSOCIATES INC.
ARCHITECTS
15 PROPERZI WAY
SOMERVILLE, MA
02143-3228

Revisions:

CONCORD FREE PUBLIC LIBRARY EXPANSION

Sheet Title:

ELEVATOR SECTIONS, PLANS, & DETAILS

Date: 24-Oct-19 Drawn By: MEB

Scale: 1 1/2" = 1'-0" Project No.: 1714

A7.2

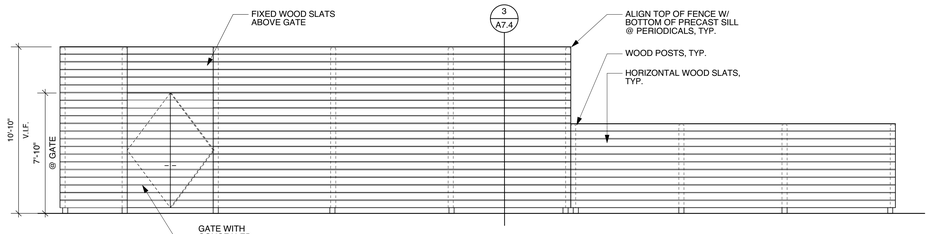

1 A7.4 FENCE ELEVATION
Scale: 1/4" = 1'-0"

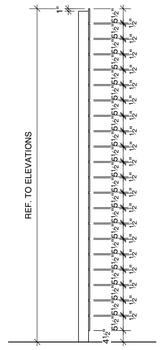

3 A7.4 TYP. SECTION @ FENCE
Scale: 1/2" = 1'-0"

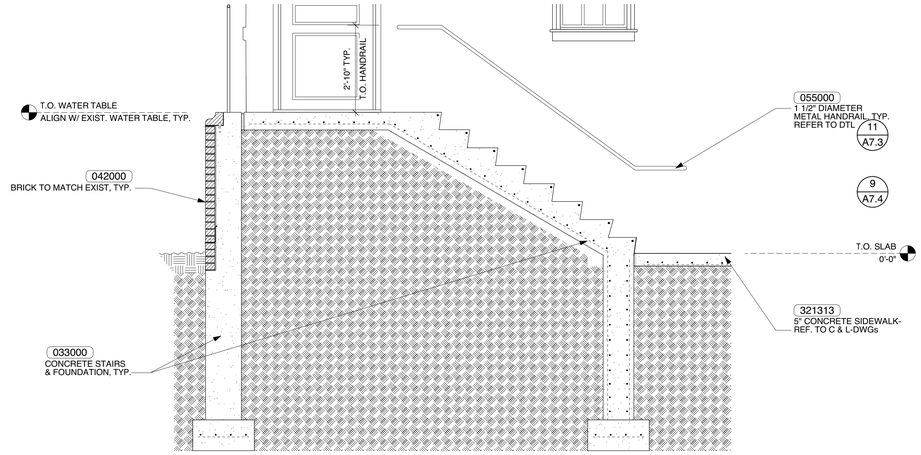

4 A7.4 SECTION @ EXT. STAIRS
Scale: 1/2" = 1'-0"

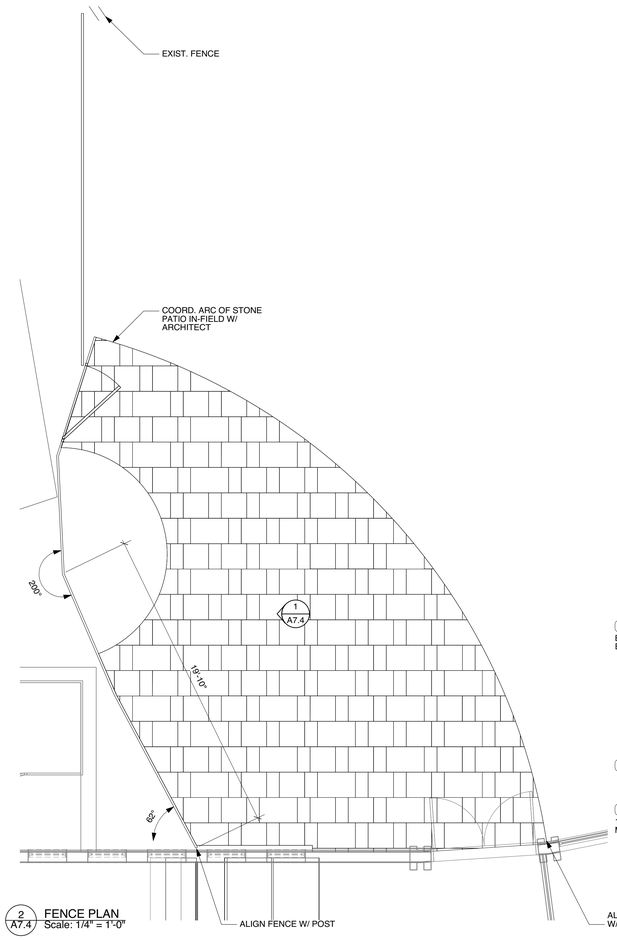

2 A7.4 FENCE PLAN
Scale: 1/4" = 1'-0"

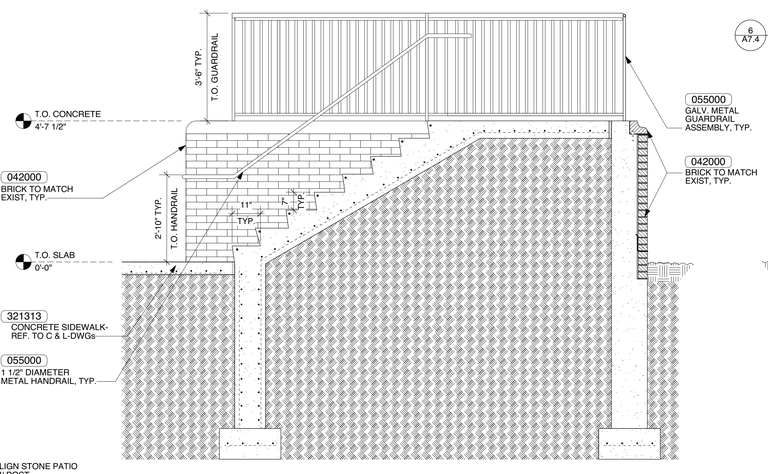

8 A7.4 SECTION @ EXT. STAIRS
Scale: 1/2" = 1'-0"

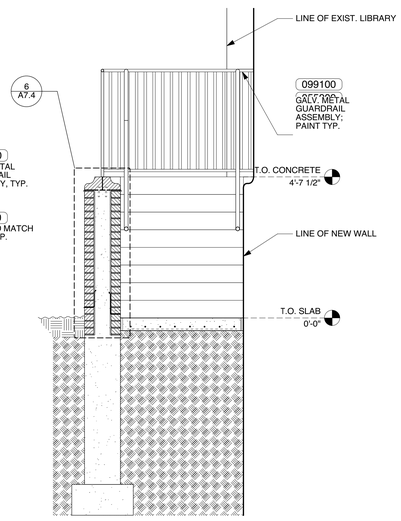

5 A7.4 SECTION @ EXT. STAIRS
Scale: 1/2" = 1'-0"

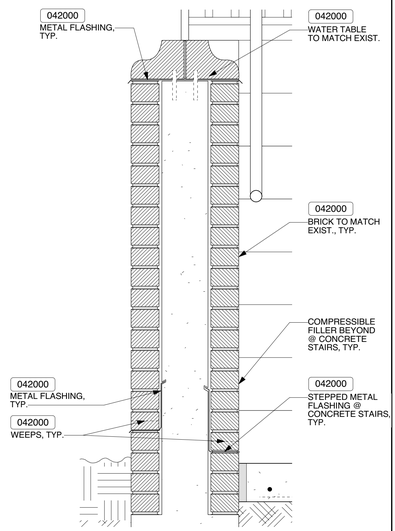

6 A7.4 DETAIL @ EXT. STAIRS
Scale: 1 1/2" = 1'-0"

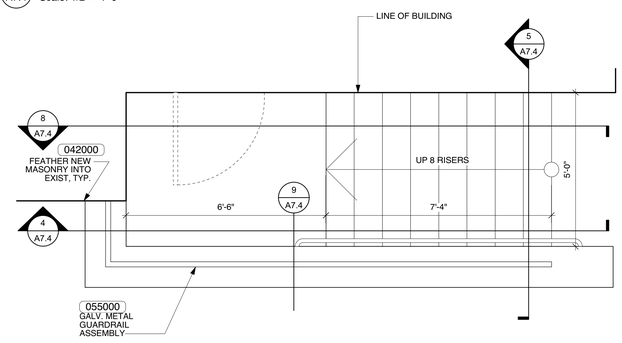

7 A7.4 ENLARGED PLAN @ EXT. STAIRS
Scale: 1/2" = 1'-0"

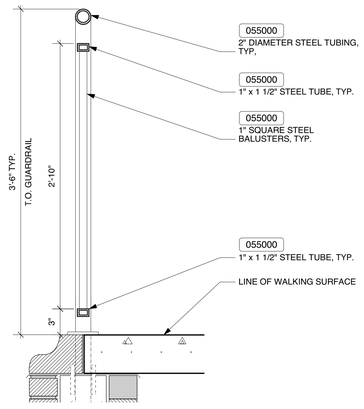

9 A7.4 EXT. GALV. METAL GUARDDRAIL
Scale: 1 1/2" = 1'-0"

JOHNSON ROBERTS ASSOCIATES INC.
ARCHITECTS
15 PROPERZI WAY
SOMERVILLE, MA
02143-3228

Revisions:

CONCORD FREE PUBLIC LIBRARY EXPANSION

Sheet Title:

EXT. STAIR, FENCE, & MISC. DETAILS

Date: 24-Oct-19 Drawn By: MEB

Scale: AS NOTED Project No.: 1714

A7.4

ROOM FINISH SCHEDULE

Room No.	Room Name	Floor	Base	Walls								Ceiling			Notes
				North		East		South		West					*PATCH & PAINT EXIST. SURFACES AS REQ'D. BY DEMO & NEW WORK AT ALL EXIST. SPACES*
		Mat'l	Mat'l	Mat'l	Fin.	Mat'l	Fin.	Mat'l	Fin.	Mat'l	Fin.	Mat'l	Fin.	Height	
004	TECH. SERVICES	EX	EX	EX	-	EX	-	EX	-	EX	-	EX	-	TO MATCH EX	
006	HALL	CARPET	EX	EX GWB	PAINT	EX GWB	PAINT	EX GWB	PAINT	EX GWB	PAINT	ACT	-	7'-10" - VIF	
006A	TUTOR	CARPET	EX	GLASS	-	EX GWB	PAINT	EX GWB	PAINT	EX GWB	PAINT	ACT	-	7'-10" - VIF	
006B	TUTOR	CARPET	EX	GLASS	-	GLASS	-	GLASS	-	EX GWB	PAINT	ACT	-	7'-10" - VIF	
006C	TUTOR	CARPET	EX	GLASS	-	GLASS	-	GLASS	-	EX GWB	PAINT	ACT	-	7'-10" - VIF	
016	SPECIAL COLLECTIONS	CARPET	RESIL.	EX GWB	PAINT	EX GWB	PAINT	EX GWB	PAINT	EX GWB	PAINT	EX ACT	-	EX	
016A	WORK ROOM	CARPET	RESIL.	GWB	PAINT	GWB	PAINT	GWB	PAINT	GWB	PAINT	ACT	-	7'-6"	
016B	GROUP STUDY	EX	EX	EX GWB	-	EX GWB	-	ALUM.	-	ALUM.	-	EX ACT	-	EX	
019	ARCHIVE VAULT	EX	EX	EX CONC	-	EX CONC	-	EX CONC	-	EX CONC	-	EX CONC	-	EX	NO WORK
019A	ARCHIVE VAULT 2	SEAL	RESIL.	GWB	PAINT	GWB	PAINT	GWB	PAINT	GWB	PAINT	ACT	-	7'-6"	
109	YOUNG ADULTS	CARPET	WOOD	GWB/GLASS	PAINT/-	EX GWB	PAINT	EX GWB	PAINT	MILLWORK	-	EX ACT	-	EX	
109A	Y.A. STUDY	CARPET	WOOD	GWB	PAINT	GWB	PAINT	GLASS	-	MILLWORK	-	EX ACT	-	EX	
110	HUB	CARPET	WOOD	EX GWB	PAINT	EX GWB	PAINT	EX GWB	PAINT	EX GWB	PAINT	EX/GWB	PAINT	EX/MATCH	
111	STAIR VESTIBULE	VCT	VCB	GWB	PAINT	GWB	PAINT	GWB	PAINT	GWB	PAINT	GWB	PAINT	7'-6"	2-HOUR RATED ROOM, INCL. RATED CLG. ASSEMBLY
112	FORUM	CARPET	EX	EX BRICK	-	EX GWB	PAINT	EX/GWB	PAINT	EX GWB	PAINT	GWB/ACT	PAINT	12'-4"	
112A	KITCHENETTE	VCT	RESIL	GWB	PAINT	GWB	PAINT	GWB	PAINT	GWB	PAINT	ACT	-	9'-0"	
112B	FORUM STORAGE	CARPET	RESIL	GWB	PAINT	GWB	PAINT	GWB	PAINT	GWB	PAINT	ACT	-	9'-0"	
130	TRUSTEES/CONF.	EX	EX	EX GWB	-	EX GWB	-	EX GWB	-	EX GWB	-	EX GWB	-	EX	WORK LIMITED TO NEW CASEWORK
202	REL./PHILOSOPHY	EX	EX	EX GWB	-	EX GWB	-	EX GWB	-	EX GWB	-	EX GWB	-	EX	WORK LIMITED TO NEW CASEWORK
206A	STUDY 1	EX	EX	GWB	PAINT	ALUM	-	EX GWB	PAINT	EX GWB	PAINT	EX GWB	PAINT	EX	DOUBLE-HEIGHT; SLOPED CEILING
206B	STUDY 2	EX	EX	EX GWB	PAINT	ALUM	-	GWB	PAINT	EX GWB	PAINT	EX GWB	PAINT	EX	DOUBLE-HEIGHT; SLOPED CEILING
H001	BASEMENT STORAGE	CONC	RESIL	CONC	PAINT	CONC	PAINT	CONC	PAINT	CONC	PAINT	DECK	PAINT	8-2"	
H002	STAIR	CONC	RESIL	CONC	PAINT	CONC	PAINT	GWB	PAINT	GWB	PAINT	DECK	PAINT	8-2"	1-HOUR RATED ROOM
H003	BASEMENT STORAGE	EX	-	EX	-	EX	-	EX	-	EX	-	EX	-	EX	PAINT NEW SURFACES ONLY
H004	MECHANICAL	EX	RESIL	EX	-	EX	-	EX	-	EX	-	EX-	-	EX	
H005	ELEV. MACH. ROOM	CONC	RESIL	GWB	PAINT	CONC/GWB	PAINT	CONC	PAINT	CONC	PAINT	GWB	PAINT	EX	2-HR RATED ROOM
H006	IDF CLOSET	EX	RESIL	GWB	PAINT	EX	PAINT	GWB/CONC	PAINT	GWB	PAINT	GWB	PAINT	EX	1-HR RATED ROOM
H007	BDA CLOSET	CONC	RESIL	GWB	PAINT	GWB	PAINT	GWB	PAINT	GWB	PAINT	DECK	PAINT	8-2"	2-HOUR RATED ROOM
H101	COMMONS	CORK/SLATE	WOOD	GLASS/GWB	-/PAINT	GWB	PAINT	GLASS/GWB	-/PAINT	GWB	PAINT	WOOD	STAIN	10'-0"	
H102	CHILDREN'S LIBRARY	CARPET	WOOD	GLASS/GWB	PAINT	GLASS/GWB	PAINT	GLASS/GWB	PAINT	GLASS	-	WOOD/ACT	STAIN	12'-0" / 9'-0"	VAULTED WOOD CEILING @ CHILDREN'S COMPUTERS
H103	STORY/CRAFT	CRK RBR	WOOD	GWB	PAINT	GWB	PAINT	GWB	PAINT	GWB	PAINT	GWB	PAINT	-	VAULTED CEILING
H104	CHILDREN'S OFFICE	CARPET	WOOD	GWB	PAINT	GWB	PAINT	GWB	PAINT	GWB	PAINT	ACT	-	9'-0"	
H105	FAMILY TOILET	CT	CT	CT	-	CT	-	CT	-	CT	-	ACT	-	9'-0"	
H106	FAMILY TOILET	CT	CT	CT	-	CT	-	CT	-	CT	-	ACT	-	9'-0"	
H107	VESTIBULE	MAT	WOOD	GWB	PAINT	GWB	PAINT	GWB	PAINT	GWB	PAINT	WOOD	STAIN	14'-7 1/2"	
H108	STAIR	CONC	RESIL	GWB	PAINT	GWB	PAINT	GWB	PAINT	GWB	PAINT	GWB	PAINT	7'-6"	1-HOUR RATED ROOM; MECH. MEZZANINE ABOVE
H109	HALL	WOOD	WOOD	EX GWB	PAINT	GWB	PAINT	GWB	PAINT	EX/CLAPBRD	PAINT	GWB	PAINT	SLOPED	CEILING TIGHT TO STRUCTURE
H110	WORKSHOP	K RBR/EX BRI	WOOD	GWB	PAINT	EX GWB	PAINT	EX GWB	PAINT	EX GWB	PAINT	EX WOOD	-	EX	
H111	MEDIA LOUNGE	EX WOOD	WOOD	EX GWB	PAINT	EX GWB	PAINT	EX GWB	PAINT	EX GWB	PAINT	EX GWB	PAINT	EX	
H112	WORKSHOP STORAGE	CARPET	RESIL	EX GWB	PAINT	GWB	PAINT	GWB	PAINT	EX/CLAPBRD	PAINT	GWB/ACT	PAINT	EX	
H113	WORKSHOP OFFICE	CARPET	RESIL	EX GWB	PAINT	EX GWB	PAINT	EX GWB	PAINT	EX GWB	PAINT	EX GWB	PAINT	EX	
H114	STAIR HALL	EX WOOD	EX	EX GWB	PAINT	EX GWB	PAINT	EX GWB	PAINT	EX GWB	PAINT	EX GWB	PAINT	EX	
H115	A/V LAB	CARPET	RESIL	EX GWB	PAINT	EX GWB	PAINT	EX GWB	PAINT	EX GWB	PAINT	EX GWB	PAINT	EX	
H116	TOILET	CT	CT	CT	-	CT	-	CT	-	CT	-	GWB	PAINT	7'-6" - V.I.F.	CEILING TIGHT TO STRUCTURE
H117	TOILET	CT	CT	CT	-	CT	-	CT	-	CT	-	GWB	PAINT	7'-6" - V.I.F.	CEILING TIGHT TO STRUCTURE
H118	HALL	WOOD	WOOD	EX GWB	PAINT	GWB	PAINT	GWB	PAINT	EX GWB	PAINT	EX/GWB	PAINT	7'-6" - V.I.F.	CEILING TIGHT TO STRUCTURE
H119	STAIR	CONC	RESIL	GWB	PAINT	GWB	PAINT	GWB	PAINT	GWB	PAINT	GWB	PAINT	-	1-HOUR RATED ROOM; CEILING TIGHT TO STRUCTURE
H120	SOUND BOOTH	CARPET	RESIL	EX GWB	PAINT	EX GWB	PAINT	EX GWB	PAINT	EX GWB	PAINT	EX GWB	PAINT	EX	SLOPED CEILING
H121	COURT WORKSHOP	CRK RBR	WOOD	WOOD	PAINT	EX WOOD	PAINT	WOOD	PAINT	EX WOOD	PAINT	EX WOOD	GWB	15'-7" - VIF	PAINT
H122	PASSAGE	CRK RBR	WOOD	GWB	PAINT	GWB	PAINT	GWB	PAINT	GWB	PAINT	GWB	PAINT	15'-7" - VIF	CEILING TIGHT TO STRUCTURE
H201	DEVELOPMENT DIR.	EX WOOD	EX	EX GWB	PAINT	EX GWB	PAINT	EX GWB	PAINT	EX GWB	PAINT	EX GWB	PAINT	EX	
H202	DEVELOPMENT OFFICE	EX WOOD	EX	GWB	PAINT	EX GWB	PAINT	EX GWB	PAINT	EX GWB	PAINT	EX GWB	PAINT	EX	
H203	AUTHOR-IN-RESIDENCE	EX WOOD	EX	EX GWB/WD	PAINT	EX GWB/WD	PAINT	EX GWB/WD	PAINT	EX GWB/WD	PAINT	EX GWB	PAINT	EX	
H204	A-I-R STUDY	EX WOOD	EX	EX GWB	PAINT	EX GWB	PAINT	EX GWB	PAINT	EX GWB	PAINT	EX GWB	PAINT	EX	
H205	STAIR HALL	EX WOOD	EX	EX GWB	PAINT	EX GWB	PAINT	EX GWB	PAINT	EX GWB	PAINT	EX GWB	PAINT	EX	
H206	STUDY 3	CARPET	RESIL	EX GWB	PAINT	EX GWB	PAINT	EX GWB	PAINT	EX GWB	PAINT	EX GWB	PAINT	EX	
H207	HALL	CARPET	WOOD	EX GWB/GWB	PAINT	EX GWB	PAINT	GWB	PAINT	EX GWB/GWB	PAINT	EX GWB	PAINT	-	SLOPED CEILING
H208	TOILET	CT	CT	CT	-	CT	-	CT	-	CT	-	GWB	PAINT	7'-6" - V.I.F.	CEILING TIGHT TO STRUCTURE
H209	TOILET	CT	CT	CT	-	CT	-	CT	-	CT	-	GWB	PAINT	7'-6" - V.I.F.	CEILING TIGHT TO STRUCTURE
H210	STUDY 4	CARPET	WOOD	EX GWB	PAINT	EX GWB	PAINT	GWB	PAINT	EX GWB	PAINT	GWB	PAINT	EX	EXIST. VAULTED CLG: REMOVE WD SHINGLES; NEW GWB
H211	REFERENCE OFFICE	CARPET	RESIL	EX GWB	PAINT	EX GWB	PAINT	EX GWB	PAINT	EX GWB	PAINT	GWB	PAINT	EX	EXIST. VAULTED CLG: REMOVE WD SHINGLES; NEW GWB
H212	STAIR	CONC	RESIL	GWB	PAINT	GWB	PAINT	GWB	PAINT	GWB	PAINT	GWB	PAINT	7'-6" - V.I.F.	1-HOUR RATED ROOM; CEILING TIGHT TO STRUCTURE
H213	DEV. STORAGE	CARPET	RESIL	GWB	PAINT	EX GWB	PAINT	EX GWB	PAINT	EX GWB	PAINT	EX	-	EX	CEILING TIGHT TO STRUCTURE
H214	REF. STORAGE	CARPET	RESIL	GWB	PAINT	EX GWB	PAINT	EX GWB	PAINT	EX GWB	PAINT	EX	-	EX	
H215	HALL	CARPET	WOOD	GWB	PAINT	EX GWB	PAINT	GWB	PAINT	GWB	PAINT	GWB	PAINT	EX	
H216	CUSTODIAL	RESIL	RESIL	GWB	PAINT	GWB	PAINT	GWB	PAINT	GWB	PAINT	GWB	PAINT	7'-6"	

DOOR SCHEDULE

Door No.	Room From	Room To	Door Type	Door Mat'l	Width - VIF	Ht - VIF	Thick	UL Label	Hdwr Set	Undr Cut	Frame Type	Frame Mat'l	Head	Jamb	Sill	Notes
006A	006	006A	H	GL	3'-0"	7'-0"	1 3/4"	-	1	-	-	-	-	-	-	
006B	006	006B	H	GL	3'-0"	7'-0"	1 3/4"	-	1	-	-	-	-	-	-	
006C	006	006C	H	GL	3'-0"	7'-0"	1 3/4"	-	1	-	-	-	-	-	-	
006D	006	005	C	WD	3'-0"	7'-0"	1 3/4"	-	10	-	4	HM	10/A8.1	11/A8.1	-	
016A	016	016A	A	HM	3'-0"	7'-0"	1 3/4"	B	5	-	SEE DTLS	HM	10/A8.1	11/A8.1	12/A8.1	
016B	016	016B	H	GL	3'-0"	7'-0"	1 3/4"	-	1	-	-	-	-	-	-	
109	110	109	B	WD/GL	(2) 3'-0"	7'-5" - VIF	1 3/4"	-	15	-	3	WD	16/A8.4	16/A8.4 & 2/A8.5	-	
109A	109	109A	H	GL	3'-0"	7'-0"	1 3/4"	-	1	-	-	-	-	-	-	
110A	110	112A	C	WD	3'-0"	7'-0"	1 3/4"	-	9	-	3	WD	6/A8.1	9/A8.1	-	
111	111	111A	C	WD	3'-0"	7'-0"	1 3/4"	B	12	-	3	WD	6/A8.1	9/A8.1	-	
112A	112	112A	C	WD	3'-0"	7'-0"	1 3/4"	-	9	-	3	WD	6/A8.1	9/A8.1	-	
112B	112	112B	C	WD	(2) 3'-0"	7'-0"	1 3/4"	-	15	-	3	WD	6/A8.1	9/A8.1	-	
112C	111	112	B	WD/GL	3'-0"	7'-6 3/4" - VIF	1 3/4"	-	13	-	3	WD	6/A8.1	9/A8.1	-	
112D	111	112	B	WD/GL	(2) 3'-0"	7'-6 3/4" - VIF	1 3/4"	-	14	-	3	WD	6/A8.1	9/A8.1	-	
112E	112	112B	-	-	3'-0"	7'-0"	-	-	-	-	3	WD	6/A8.1	9/A8.1	-	FRAMED OPENING
206A	STACKS	2016A	H	GL	3'-0"	7'-0"	1 3/4"	-	1	-	-	-	-	-	-	
206B	STACKS	2016B	H	GL	3'-0"	7'-0"	1 3/4"	-	1	-	-	-	-	-	-	
FD1	110	H101	I	MTL	12'-9 1/2"	7'-2"	5/8"	B	-	-	5	WD	1/A4.11	14/A8.1	-	OVERHEAD FIRE DOOR
FD2	H101	110	I	MTL	12'-9 1/2"	7'-2"	5/8"	A	-	-	5	WD	1/A4.11	15/A8.1	-	OVERHEAD FIRE DOOR
FD3	110	H101	I	MTL	4'-3"	7'-2"	5/8"	B	-	-	5	WD	1/A4.11	14/A8.1	-	OVERHEAD FIRE DOOR; GWB RETURNS @ HEAD/JAMB
H002	H001	H002	A	HM	3'-0"	6'-8"	1 3/4"	C	17	-	4	HM	10/A8.1	11/A8.1	-	
H003	H003	H111	F	WD	2'-5"	6'-8"	1 3/4"	-	17	-	2	WD	7/A8.1	8/A8.1	-	
H004	H004	H03	A	HM	3'-0"	6'-8"	1 3/4"	-	19	-	4	HM	10/A8.1	11/A8.1	-	
H005	H005	H003	A	HM	3'-0"	6'-8"	1 3/4"	B	18	-	4	HM	10/A8.1	11/A8.1	-	
H006	H006	H03	A	HM	3'-0"	6'-8"	1 3/4"	C	18	-	4	HM	10/A8.1	11/A8.1	-	
H007	H001	H007	A	HM	(2) 3'-0"	6'-8"	1 3/4"	B	27	-	4	HM	10/A8.1	11/A8.1	-	
H102	H102	H101	D	WD/GL	(2) 3'-0"	8'-0"	1 3/4"	-	21	-	S-3	WD	7/A8.4	8/A8.4	-	
H103	H102	H103	D	WD/GL	(2) 3'-0"	8'-0"	1 3/4"	-	22	-	S-4	WD	19/A8.4 SIM	8/A8.4	-	
H104	H102	H104	D	WD	3'-0"	8'-0"	1 3/4"	-	23	-	1	WD	5/A8.1	8/A8.1	-	
H105	H102	H105	A	WD	3'-0"	8'-0"	1 3/4"	-	25	3/4"	4	HM	10/A8.1	11/A8.1	-	
H106	H102	H106	A	WD	3'-0"	8'-0"	1 3/4"	-	25	3/4"	4	WD	10/A8.1	11/A8.1	-	
H107A	H101	H107A	D	WD	3'-0"	7'-0"	1 3/4"	-	16	-	S-6	WD	15/A8.3	15/A8.3 SIM	-	
H107B	H109	H107B	D	WD	3'-0"	7'-0"	1 3/4"	-	0	-	1	WD	5/A8.1	8/A8.1	-	
H108	H107	H108	A	HM	3'-0"	7'-0"	1 3/4"	C	17	-	4	HM	10/A8.1	11/A8.1	-	
H109	H109	H111	-	-	3'-0"	6'-8"	-	-	-	-	1,2	WD	5/A8.1 & 7/A8.1	8/A8.1	-	FRAMED OPENING; FRAME TYP. 1 @ H109, TYP. 2 @ H111
H110A	H110	H111	E	WD/GL	(2) 3'-0"	6'-8"	1 3/4"	-	22	-	1,2	WD	5/A8.1 & 7/A8.1	8/A8.1	-	FRAME TYP. 1 @ H110, FRAME TYP. 2 @ H111
H110B	H110	H109	EXIST	EXIST	EXIST	EXIST	EXIST	-	23	-	1	WD	5/A8.1	8/A8.1	-	EXIST DOOR & FRAME TO REMAIN; NEW HARDWARE
H110C	H102	H110	F	WD	3'-0"	6'-8"	1 3/4"	-	23	-	1	WD	5/A8.1	8/A8.1	-	
H110D	H121	H110	E	WD/GL	(2) 3'-0"	6'-8"	1 3/4"	-	22	-	1	WD	5/A8.1 & 7/A8.1	8/A8.1	-	
H112	H112	H113	F	WD	3'-0"	6'-8"	1 3/4"	-	18	-	1	WD	5/A8.1	8/A8.1	-	
H113A	H111	H113	E	WD/GL	3'-0"	6'-8"	1 3/4"	-	23	-	1,2	WD	5/A8.1 & 7/A8.1	8/A8.1	-	FRAME TYP. 1 @ H113, FRAME TYP. 2 @ H111
H113B	H109	H113	F	WD	3'-0"	6'-8"	1 3/4"	-	24	-	1,2	WD	5/A8.1 & 7/A8.1	8/A8.1	-	FRAME TYP. 1 @ H113, FRAME TYP. 2 @ H114
H114	H111	H113	E	WD/GL	3'-0"	6'-8"	1 3/4"	-	0	-	1,2	WD	5/A8.1 & 7/A8.1	8/A8.1	-	FRAME 1 @H113, FRAME 2 @H111; SCRIBE TRIM TO UNDERSIDE OF STAIR
H115A	H111	H115	E	WD/GL	3'-0"	6'-8"	1 3/4"	-	20	-	1,2	WD	5/A8.1 & 7/A8.1	8/A8.1	-	FRAME TYP. 1 @ H115, FRAME TYP. 2 @ H111
H115B	H114	H115	F	WD	3'-0"	6'-8"	1 3/4"	-	20	-	1,2	WD	5/A8.1 & 7/A8.1	8/A8.1	-	FRAME TYP. 1 @ H115, FRAME TYP. 2 @ H114
H116	H120	H116	F	WD	3'-0"	6'-8"	1 3/4"	-	25	3/4"	1	WD	5/A8.1	8/A8.1	-	
H117	H120	H117	F	WD	3'-0"	6'-8"	1 3/4"	-	25	3/4"	1	WD	5/A8.1	8/A8.1	-	
H118	H102	H118	F	WD	3'-0"	6'-8"	1 3/4"	-	17	-	1	WD	5/A8.1	8/A8.1	-	
H118A	H118	H111	-	-	-	6'-8"	1 3/4"	-	17	-	1,2	WD	5/A8.1 & 7/A8.1	8/A8.1	-	FRAMED OPENING; FRAME TYP. 1 @ H118, TYP. 2 @ H111
H119	H118	H119	F	WD	3'-0"	6'-8"	1 3/4"	C	17	-	1	WD	5/A8.1	8/A8.1	-	
H120	H120	H115	E	WD/GL	3'-0"	6'-8"	1 3/4"	-	20	-	1	WD	5/A8.1	8/A8.1	-	
H121	H121	H102	D	WD	3'-0"	8'-0"	1 3/4"	-	20	-	SEE DTLS	WD	3/A4.5	14/A4.10	12/A8.1	
H121A	H121	H122	-	-	3'-0"	6'-8"	-	-	-	-	1	WD	5/A8.1 & 7/A8.1	8/A8.1	-	FRAMED OPENING
H122	H122	H111	E	WD/GL	3'-0"	6'-8"	1 3/4"	-	24	-	1,2	WD	5/A8.1 & 7/A8.1	8/A8.1	-	FRAME TYP. 1 @ H110, FRAME TYP. 2 @ H111
H201	H202	H201	E	WD/GL	3'-0"	6'-8"	1 3/4"	-	23	-	1	WD	5/A8.1	8/A8.1	-	
H202	H207	H202	E	WD/GL	(2) 3'-0"	6'-8"	1 3/4"	-	0	-	1	WD	5/A8.1	8/A8.1	-	
H203	H204	H203	F	WD	3'-0"	6'-8"	1 3/4"	-	23	-	1	WD	5/A8.1	8/A8.1	-	
H204	H205	H204	F	WD	3'-0"	6'-8"	1 3/4"	-	24	-	1,2	WD	5/A8.1 & 7/A8.1	8/A8.1	-	FRAME TYP. 1 @H204, FRAME TYP. 2 @ H205
H205	H205	H207	-	-	3'-0"	6'-8"	-	-	-	-	1,2	WD	5/A8.1 & 7/A8.1	8/A8.1	-	FRAMED OPENING; FRAME TYP. 1 @ H207, TYP. 2 @ H205
H206	H205	H206	F	WD	3'-0"	6'-8"	1 3/4"	-	24	-	1,2	WD	5/A8.1 & 7/A8.1	8/A8.1	-	FRAME TYP. 1 @ H206, FRAME TYP. 2 @ H205
H207	H207	ATTIC	EXIST	EXIST	EXST	EXIST	EXIST	-	-	-	EXIST	EXIST	-	-	-	EXIST. DOOR & FRAME
H208	H210	H208	F	WD	3'-0"	6'-8"	1 3/4"	-	25	3/4"	1	WD	5/A8.1	8/A8.1	13/A8.1	
H209	H210	H209	F	WD	3'-0"	6'-8"	1 3/4"	-	25	3/4"	1	WD	5/A8.1	8/A8.1	13/A8.1	
H211	H210	H211	E	WD/GL	3'-0"	6'-8"	1 3/4"	-	24	-	1	WD	5/A8.1	8/A8.1	-	
H212	H210	H212	F	WD	3'-0"	6'-8"	1 3/4"	C	17	-	1	WD	5/A8.1	8/A8.1	-	
H213	H213	H207	F	WD	3'-0"	6'-8"	1 3/4"	-	18	3/4"	1	WD	5/A8.1	8/A8.1	-	
H214	H214	H207	F	WD	3'-0"	6'-8"	1 3/4"	-	18	3/4"	1	WD	5/A8.1	8/A8.1	-	
H215	H219	H215	-	-	3'-0"	6'-8"	-	-	-	-	1	WD	5/A8.1	8/A8.1	-	FRAMED OPENING
H216	H207	H216	F	WD	3'-0"	6'-8"	1 3/4"	-	18	-	1	WD	5/A8.1	8/A8.1	-	
X01	H107	EXT	D	WD	3'-0"	7'-0"	1 3/4"	-	2	-		WD	15/A8.3 SIM	2/A4.10 SIM	12/A8.1	
X02	EXT	H114	EXIST	EXIST	EXIST	EXIST	EXIST	-	3	-	EXIST	EXIST	-	-	-	EXIST. DOOR & FRAME TO REMAIN; NEW HARDWARE
X03	H119	EXT	F	WD	3'-0"	7'-0"	1 3/4"	C	4	-	SEE DTLS	WD	17/A8.1	17/A8.1 SIM	12/A8.1	
X05	H101	EXT	D	WD	(2) 3'-0"	8'-0"	1 3/4"	-	8	-	SEE DTLS	WD	15/A8.3 SIM	2/A4.10	12/A8.1	
X06	111	EXT	A	HM	3'-0"	7'-0"	1 3/4"	A	5	-	SEE DTLS	HM	10/A8.1 SIM	11/A8.1 SIM	12/A8.1	NO WOOD TRIM
X07	112B	EXT	G	WD	3'-0"	7'-0"	1 3/4"	-	6	-	SEE DTLS	WD	4/A8.3 SIM	3/A4.11	12/A8.1	
X08	EXT	120	EXIST	EXIST	EXIST	EXIST	EXIST	-	-	-	EXIST	EXIST	-	-	-	REMOVE EXIST. HARDWARE
X09	016A	EXT	D	WD	3'-0"	7'-0"	1 3/4"	-	2	-		WD	15/A8.3 SIM	2/A4.10 SIM	12/A8.1	

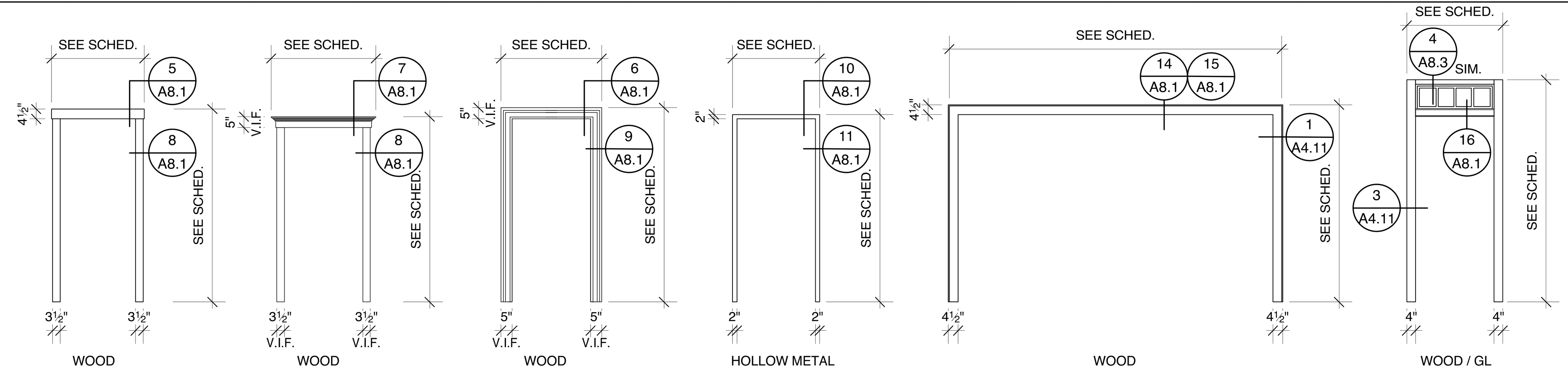

1 A8.1 FRAME TYPES
Scale: 1/4" = 1'-0"

GLAZING SCHEDULE
1 1" INSULATED GLASS; TEMPERED
2 1/4" TEMPERED GLASS

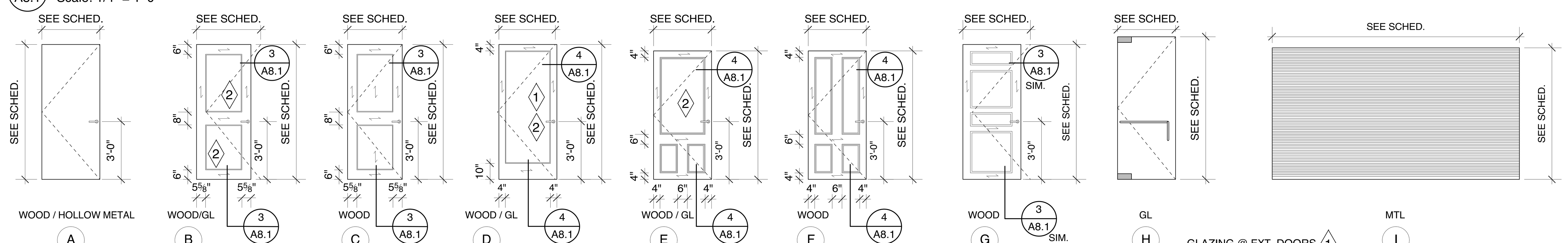

2 A8.1 DOOR TYPES
Scale: 1/4" = 1'-0"

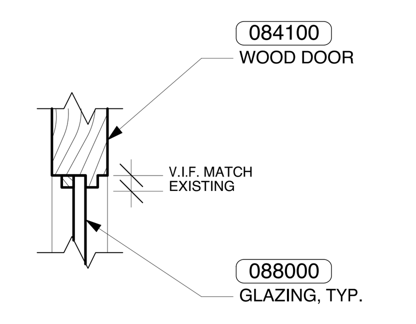

3 A8.1 SOLID WOOD DOOR W/ GLASS PANEL DTL
Scale: 3" = 1'-0"
WOOD PANEL SIM.

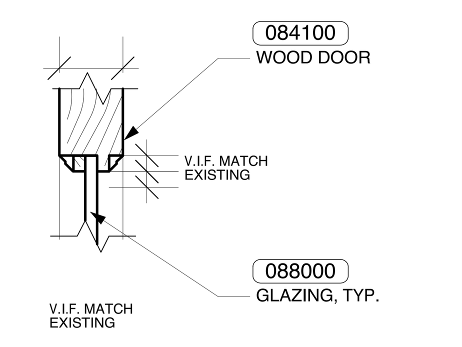

4 A8.1 SOLID WOOD DOOR W/ GLASS PANEL DTL
Scale: 3" = 1'-0"
WOOD PANEL SIM.

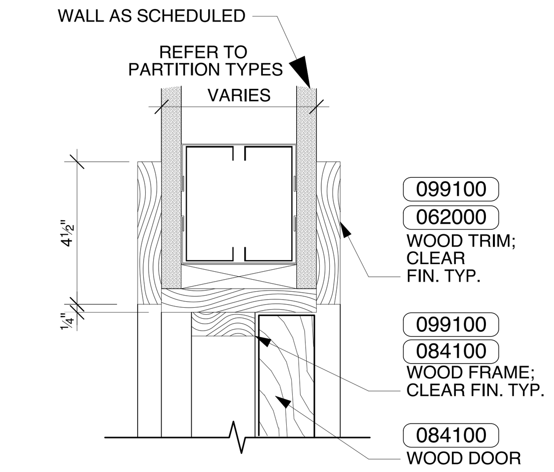

5 A8.1 INTERIOR SOLID WD DOOR HEAD DTL
Scale: 3" = 1'-0"

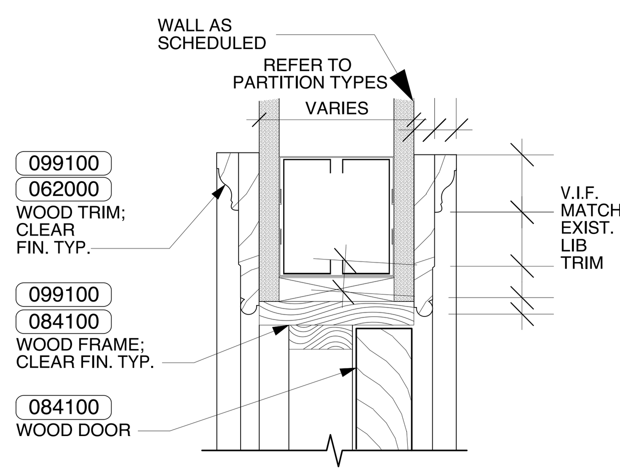

6 A8.1 INTERIOR SOLID WD DOOR HEAD DTL
Scale: 3" = 1'-0"

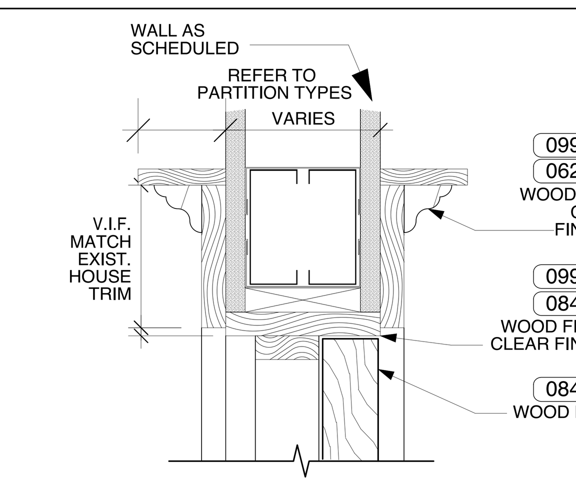

7 A8.1 INTERIOR SOLID WD DOOR HEAD DTL
Scale: 3" = 1'-0"

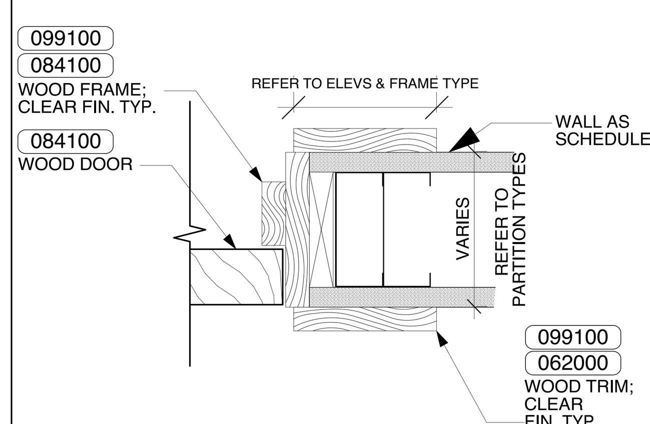

8 A8.1 INTERIOR SOLID WD DOOR JAMB DTL
Scale: 3" = 1'-0"

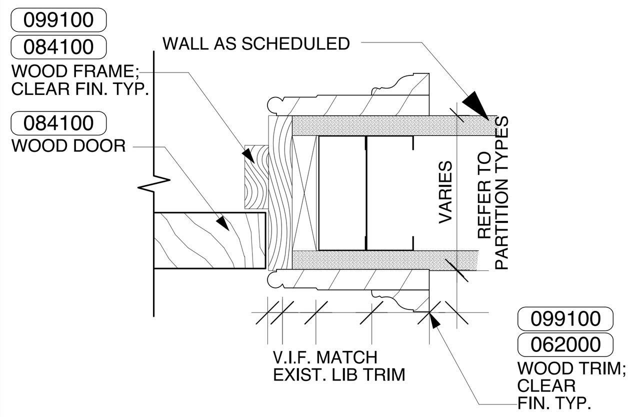

9 A8.1 INTERIOR SOLID WD DOOR JAMB DTL
Scale: 3" = 1'-0"

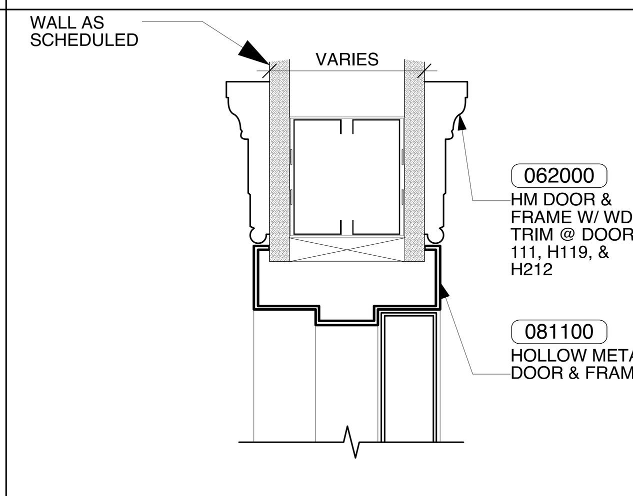

10 A8.1 HM DOOR HEAD DTL
Scale: 3" = 1'-0"

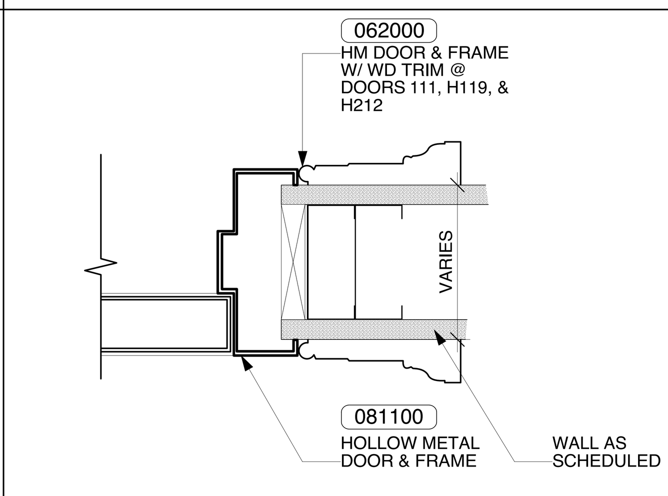

11 A8.1 HM DOOR JAMB DTL
Scale: 3" = 1'-0"

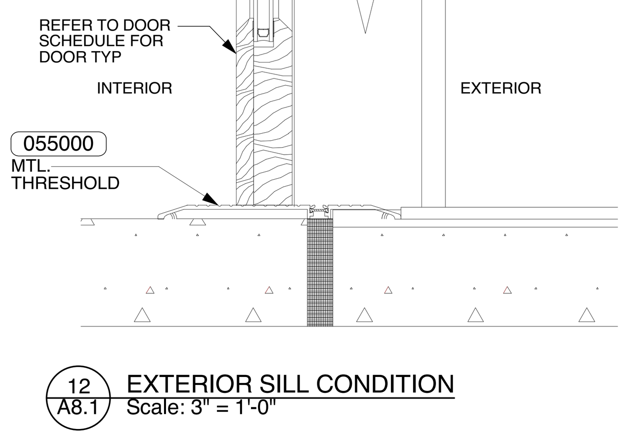

12 A8.1 EXTERIOR SILL CONDITION
Scale: 3" = 1'-0"

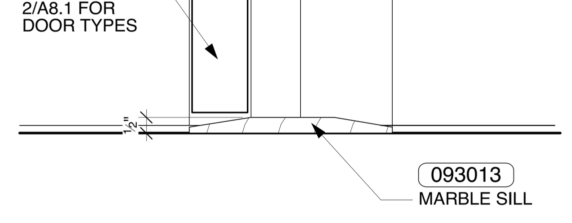

13 A8.1 INTERIOR SILL DETAIL
Scale: 3" = 1'-0"

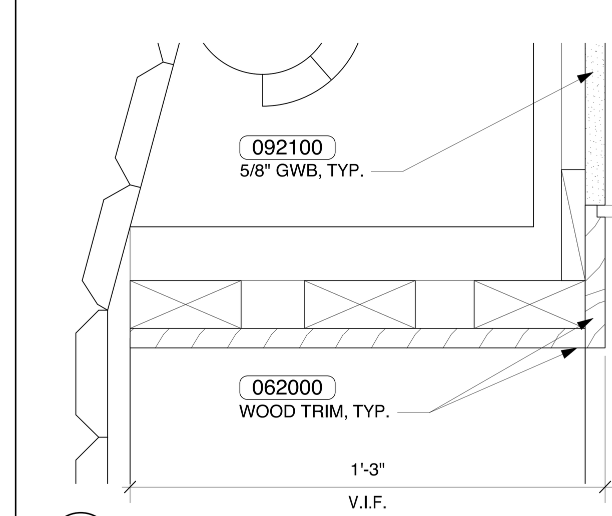

14 A8.1 FIRE DOOR FRAME HEAD DETAIL
Scale: 3" = 1'-0"

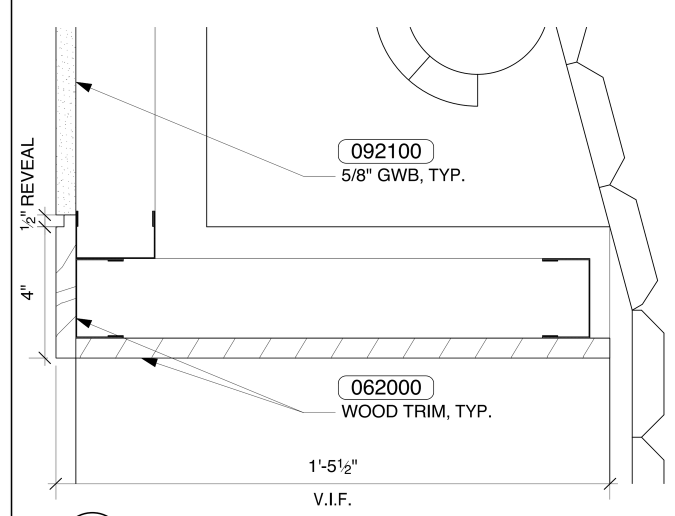

15 A8.1 FIRE DOOR FRAME HEAD DETAIL
Scale: 3" = 1'-0"

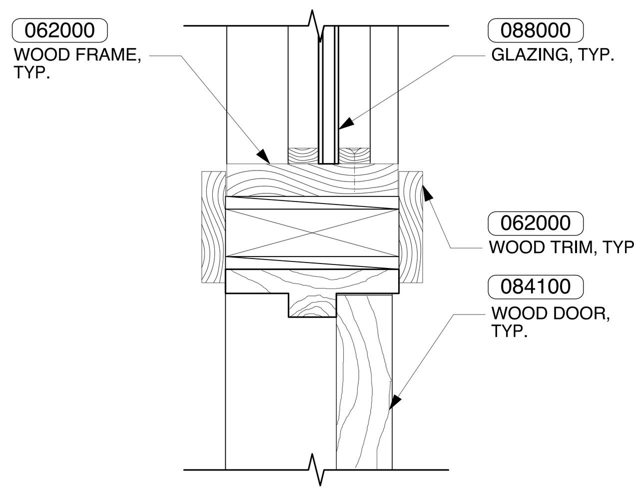

16 A8.1 TRANSOM DETAIL
Scale: 3" = 1'-0"

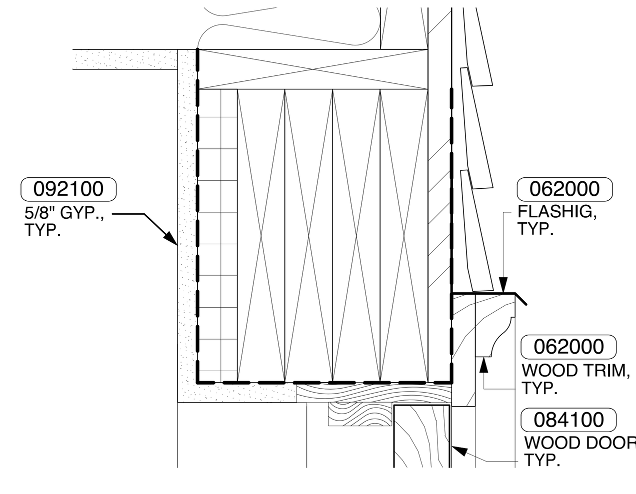

17 A8.1 EXTERIOR WOOD DOOR HEAD DETAIL
Scale: 3" = 1'-0"

JOHNSON ROBERTS ASSOCIATES INC.
ARCHITECTS
15 PROPERZI WAY
SOMERVILLE, MA
02143-3228

Revisions:

CONCORD FREE PUBLIC LIBRARY EXPANSION

Sheet Title:
SCHEDULES, DOOR TYPES & DETAILS

Date: 24-Oct-19 Drawn By: MEB
Scale: NTS Project No.: 1714

A8.1

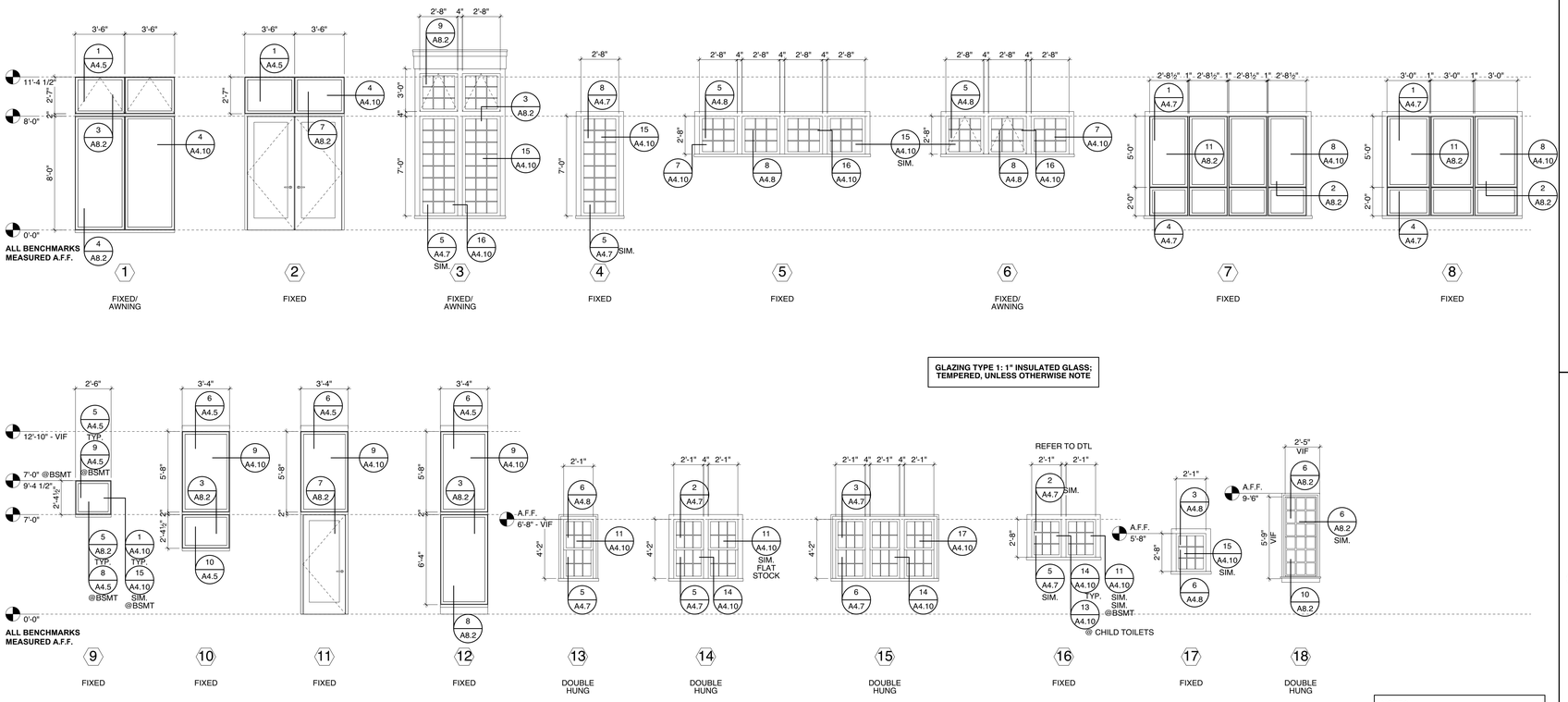

GLAZING TYPE 1: 1" INSULATED GLASS; TEMPERED, UNLESS OTHERWISE NOTE

NOTES:

1. ALIGN HEAD HEIGHT W/ EXIST. ADJ. @ WINDOW TYPES 13-16
2. MATCH DIMENSIONS & PROFILES OF EXIST. ADJ. EXTERIOR TRIM @ WINDOW TYPES 13-18

1 / A8.2 WINDOW TYPES
Scale: 1/4" = 1'-0"

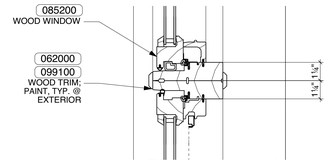

2 / A8.2 WINDOW DETAIL - TYPICAL MULLION
Scale: 3" = 1'-0"

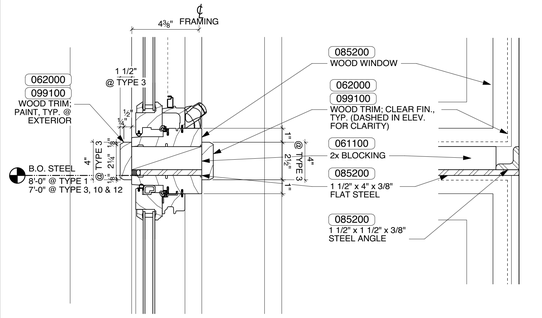

3 / A8.2 WINDOW DETAIL - REINFORCED HORIZONTAL MULLION
Scale: 3" = 1'-0"

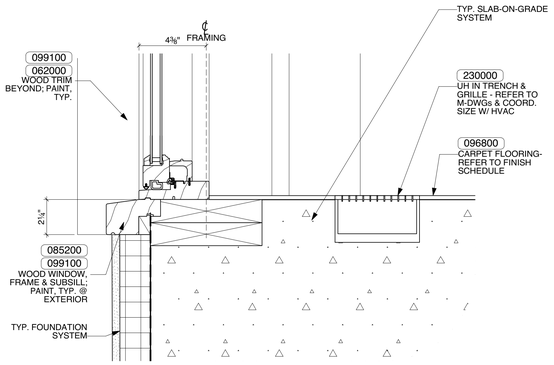

4 / A8.2 WINDOW DETAIL - SILL
Scale: 3" = 1'-0"

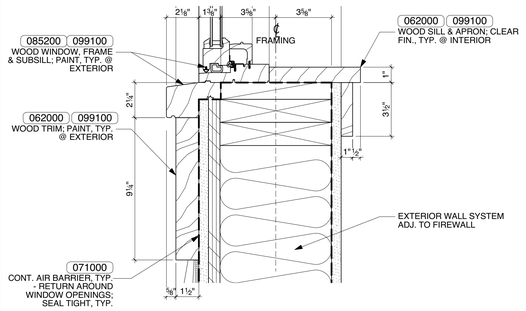

5 / A8.2 WINDOW DETAIL - SILL
Scale: 3" = 1'-0"

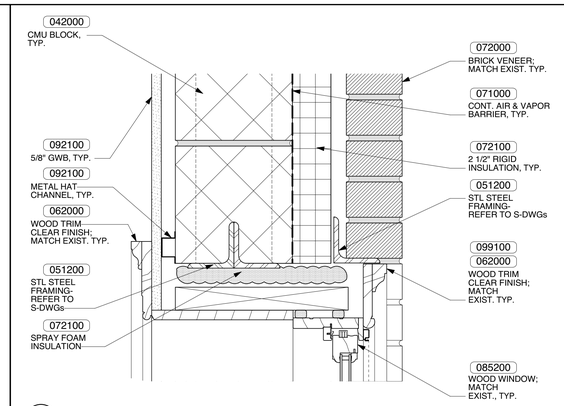

6 / A8.2 WINDOW DETAIL - HEAD
Scale: 3" = 1'-0"

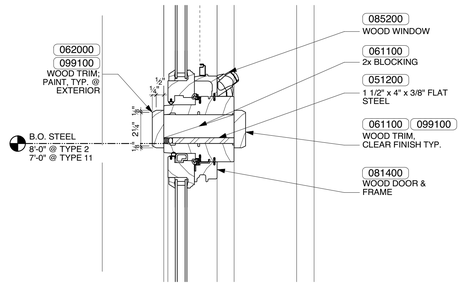

7 / A8.2 DOOR HEAD/TRANSOM DETAIL - HORIZONTAL MULLION
Scale: 3" = 1'-0"

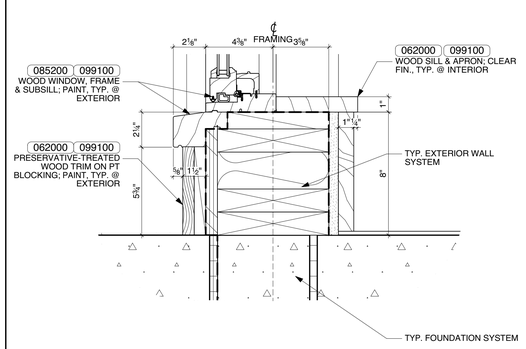

8 / A8.2 WINDOW DETAIL - SILL
Scale: 3" = 1'-0"

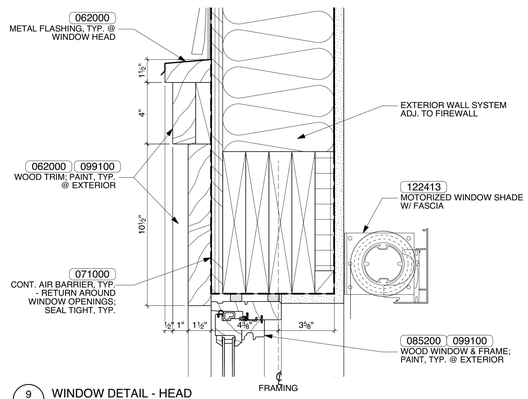

9 / A8.2 WINDOW DETAIL - HEAD
Scale: 3" = 1'-0"

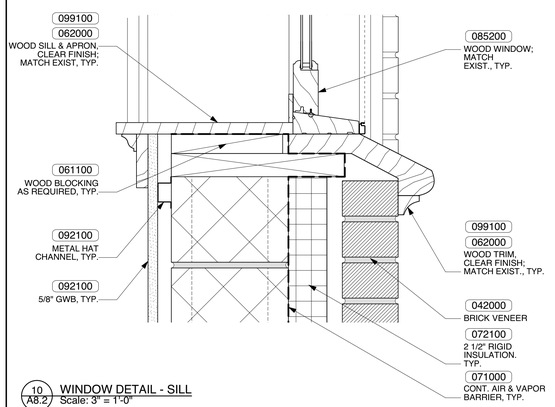

10 / A8.2 WINDOW DETAIL - SILL
Scale: 3" = 1'-0"

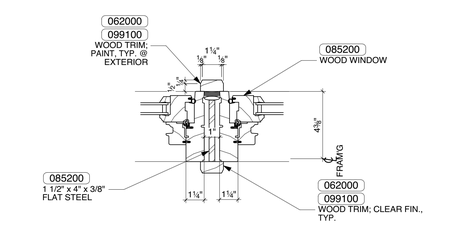

11 / A8.2 WINDOW DETAIL - REINFORCED VERTICAL MULLION
Scale: 3" = 1'-0"

JOHNSON ROBERTS ASSOCIATES INC.
ARCHITECTS
15 PROPERZI WAY
SOMERVILLE, MA
02143-3228

Revisions:

CONCORD FREE PUBLIC LIBRARY EXPANSION

Sheet Title:

WINDOW SCHEDULE & DETAILS

Date: 24-Oct-19 Drawn By: MEB

Scale: As Noted Project No.: 1714

A8.2

GENERAL

1. Structural work shall conform to the requirements of "The Commonwealth of Massachusetts State Building Code", 9th Edition, "The International Building Code" (IBC 2015), "The International Existing Building Code" (IEBC 2015), and ASCE 7-10.
2. Examine architectural, mechanical, plumbing and electrical drawings for verification of location and dimensions of chases, inserts, openings, sleeves, washes, drips, reveals, depressions and other project requirements not shown on structural drawings.
3. Verify and coordinate dimensions related to this project.
4. Provide and install necessary material to connect elevator support beams. Location and size of beams and any inserts required shall be determined by the elevator manufacturer.
5. Openings in slabs and walls less than 12" maximum dimension are generally not shown on structural drawings shall not be revised without prior written approval of the architect.
6. Typical details and notes shown on structural drawings shall be applicable to all parts of the structural work except where specifically required otherwise by contract documents.
7. Details not specifically shown shall be similar to those shown for the most nearly similar condition as determined by the architect.
8. The contractor shall submit complete shop drawings for all parts of the work, including description of demolition and construction methods and sequencing where applicable. No performance of the work including, but not limited to, demolition and construction methods and sequencing where applicable to, demolition of existing structure or fabrication or erection of new structural elements, shall commence without review of the shop drawings by the architect.

FOUNDATIONS

1. Foundations for this project consist of spread footings, foundation walls, and slabs on grade. The allowable bearing capacity is 2.0 tons per square foot based on the Geotechnical report prepared by O'Reilly, Talbot, & Okum, dated August 28, 2017.
2. No responsibility is assumed by the architect for the validity of the subsurface conditions described on the drawings, specifications, test borings or test pits. These data are included only to assist the contractor during bidding and subsequent construction and represent conditions only at these specific locations at the particular time they were made.
3. Foundation units shall be centered under supported structural members, unless noted otherwise on the drawings.
4. Exterior construction shall be carried down below finished exterior grade to a minimum depth of 4'-0", unless noted otherwise.
5. Provide temporary or permanent supports, whether shoring, sheeting or bracing so that no horizontal movement or vertical settlement occurs to existing structures, streets or utilities adjacent to the project site.
6. Carry out continuous control of surface and subsurface water during construction such that foundation work is done in dry and on undisturbed subgrade material, as applicable.
7. Bottom 3 inches of exactions for footings shall be finished by hand shovel.
8. Backfill under any portion of the structure shall be compacted in 6" lifts per specifications requirements.
9. No foundation concrete shall be placed in water or on frozen subgrade material.
10. Protect in-place foundations and slabs from frost penetration until the project is completed.
11. Do not backfill behind foundation walls until permanent lateral structural support system is in place and of full strength.
12. Sheeting, shoring and bracing for the lateral support of excavation shall remain in place until all permanent structural systems below ground level are complete.

CONCRETE

1. Concrete work shall conform to "Building Code Requirements for Reinforced Concrete" (ACI 318-14), and "Specifications for Structural Concrete for Buildings" (ACI 301-14).
2. Concrete shall be controlled concrete, proportioned, mixed and placed in the presence of a representative of an approved testing agency.
3. Unless noted otherwise, concrete shall have a minimum 28 day compressive strength and be of a type as follows:

(A) Footings, piers, slabs-on-grade	4000 PSI	(Normal weight)
(B) Framed slabs, beams, walls	4000 PSI	(Normal weight)
(C) Concrete on steel deck	3000 PSI	(Normal weight)
(D) Topping slabs & housekeeping pads	3000 PSI	(Normal weight)

4. Concrete to be exposed to the weather in the finished project shall be air entrained.
5. Provide vapor barrier under interior slabs cast on grade.
6. Construction joints shown on drawings are mandatory. Omissions, additions or changes shall not be made except with the submittal of a written request together with drawings of the proposed joint locations for approval of the architect.
7. Where construction joints are not shown or when alternate joint locations are proposed, a concrete placing sequence shall be submitted to the architect for approval prior to preparation of the reinforcement shop drawings.
8. Size of concrete placements, unless noted otherwise, shall be as follows:

	Max Length (Feet)	Max Area (Sq. Feet)
(A) Footings and walls	30*	-
(B) Slabs on grade	30*	900* place in alt panel
(C) Concrete on steel deck	90	8100

*Exceed only where intermediate contraction joints are provided.

9. Minimum of 72 hours shall elapse between adjacent concrete placements.
10. Concrete shall be placed without horizontal construction joints except where shown or noted. Vertical construction joints and stops in concrete work shall be made at midspan or at points of minimum shear.
11. Concrete slabs, including concrete placed on steel deck, shall be placed so that the slab thickness is at no point less than that indicated on the drawings. (This will require that the slab not be cast dead level where supporting beams, girders or trusses have an upward camber.)
12. Structural steel below grade shall be encased in concrete with a minimum cover of 2".

REINFORCEMENT

1. Reinforcement work of detailing, fabrication and erection shall conform to "Building Code Requirements for Reinforced Concrete" (ACI 318-14), "ACI Detailing Manual – 1994" (SP-66), "CRSI Manual of Standard Practice" (MSP 1-97), and "Structural Welding Code – Reinforcing Steel" (AWS D1.4-92).
2. Steel reinforcement, unless noted otherwise, shall conform to the following:

(A) Bars, ties and stirrups	ASTM A615 Grade 60	(FY=60 KSI)
(B) Welded wire fabric (WWF)	ASTM A185	

3. Provide and schedule on shop drawings the necessary accessories to hold reinforcement securely in position. Minimum requirements shall be: high chairs, 4'-0" O.C. with continuous #5 support bar; slab bolsters, continuous and 3'-6" O.C.; beam bolsters, 5'-0" O.C.
4. Minimum concrete protective covering for reinforcement, unless noted otherwise, shall be as follows:

(A) Unformed surfaces cast against and permanently in contact with earth: 3.0"
(B) Formed surfaces in contact with earth or exposed to weather:

#6 through #18 bars	2.0"
#5 bars, 5/8" wire and smaller	1.5"

(C) Surfaces not in contact with earth or exposed to weather - walls, slabs, joists:

#14 and #18 bars	1.5"
#11 bars and smaller	1.0"

Beams, girders and columns – principal reinforcement, ties, stirrups or spirals: 1.5"

5. Where continuous reinforcement is called for, it shall be extended continuously around corners and lapped at necessary splices or hooked at discontinuous ends. Laps shall be Class B tension lap splices, unless noted otherwise.
6. Where reinforcement is not shown on drawings, provide reinforcement in accordance with applicable details as determined by the architect. In no case shall reinforcement be less than the minimum reinforcement permitted by the applicable codes.
7. Where reinforcement is required in section, reinforcement is considered typical wherever the section applies.
8. Reinforcement shall be continuous through construction joints.
9. Dowels shall match bar size and number, unless noted otherwise.
10. Welded wire fabric shall lap 8" or 1-1/2" spaces, whichever is larger and shall be wired together.
11. Reinforcement shall not be tack-welded.
12. Installation of reinforcement shall be completed at least 24 hours prior to the scheduled concrete placement. Notify architect of completion at least 24 hours prior to the scheduled completion of the installation of reinforcement.

STRUCTURAL STEEL

1. Structural steel work shall conform to "Specification for Structural Steel Buildings" (AISC 2011); "Code of Standard Practice for Steel Buildings & Bridges" (AISC 2011; "Seismic Provisions for Structural Steel Buildings" (AISC, 2011); "Specification for Structural Steel Joints Using ASTM A325 and A490 bolts" (AISC 2011), "Structural Welding Code – Steel" (AWS D1.1-96).
2. Structural steel shall be detailed in accordance with "Detailing for Steel Construction (AISC)" and where required, designed in accordance with cited references.
3. Structural steel details, not specifically shown, shall be taken as being similar to those shown for the most nearly similar condition as determined by the architect.
4. Structural steel shall be new steel conforming to the following:

(A) Unless noted otherwise	ASTM A992	Grade 50 (Fy = 50 KSI)
(B) Angles, T's, channels, and plates, etc	ASTM A36	(Fy = 36 KSI)
(C) Tubes	ASTM A500	Grade B (Fy = 46 KSI)
(D) Anchor bolts	ASTM A307	
(E) High strength bolts	ASTM A325	

5. Anchor bolts, leveling plates or bearing plates shall be located and built into connecting work, preset by templates or similar methods. Plates shall be set in full beds of non-shrink grout.
6. Bolted connections should be as follows:
   (A) Minimum bolt diameter – ¾", two bolts minimum.
   (B) Standard, oversized or horizontal shorts slotted holes in webs of beams.
   (C) Shear connections for moment connected members – friction type high strength bolts in single shear.
   (D) Shear connections for other members – simple shear connections with either friction type high strength bolts in single shear or bearing type high strength bolts (threads included in shear plane) in single or double shear.
   (E) Simple shear connections shall be capable of end rotation per AISC requirements for "Unrestrained Members".
7. Welded connections shall be made by approved certified welders using filler metal conforming to E70XX or F7X-EXXX with low hydrogen.
8. Welds shall develop the full strength of the materials being welded, unless noted otherwise, except that fillet welds shall be a minimum of ¼".
9. Beam connections, unless noted otherwise, shall provide connection capacity as follows, or as shown on the plans, whichever is larger:
   (A) Beams: support a reaction "R" equal to ½ the total uniform load capacity of beam for a given shape, span and grade of steel per "Maximum Total Uniform Load" Table 3-6 to 3-9, AISC Manual of Steel Construction, 14th Edition.
10. Ends of columns at splices and at other bearing connections shall be "finished to bear" to complete the true bearing.
11. Provide stiffeners "finished to bear" under all load concentrations on supporting members, over columns, and where shown on drawings.
12. Provide temporary erection bracing and supports to hold structural steel framing securely in position. Such temporary bracing and supports shall not be removed until permanent bracing has been installed and concrete for floor slabs has attained 75% of specified concrete strength.
13. Structural steel framing shall be true and plumb before connections are finally bolted or welded.
14. Field cutting of structural steel or any field modifications of structural steel shall not be made without prior written approval by architect for each specific case.
15. Structural steel members and connections exposed to the weather shall be galvanized.

STEEL DECK

1. Steel deck and shear connector work shall conform to the "Specification for Design of Light Gage and Cold-Formed Steel Structural Members" (AISC 1989); "Structural Welding Code – Steel" (AWS D1.1-94); and "Structural Welding Code – Sheet Steel" (AWS D1.3-89).
2. Steel deck cross sections are only represented diagrammatically on the drawings.
3. Steel deck panels shall be formed from steel sheets conforming to ASTM A653, Grade 33, with a minimum yield point of 33,000 PSI, ASTM A570 (UNGALV), Grade 33 or ASTM A611 (UNGALV), Grade C with a minimum yield point of 33,000 PSI and a thickness not thinner than 20 gage.

MASONRY CONSTRUCTION

1. Clay (brick) and concrete masonry unit (CMU) construction shall conform to "Building Code Requirements for Masonry Structures" (ACI 530-99/ASCE 5-99/TMS402-99), and to "Specifications for Masonry Structures" (ACI 530.1-99/ASCE 6-99/TMS 602-99).
2. Materials strings shall be as follows:
   (A) Face brick shall conform to ASTM C-215 Grade SW with compressive strength of 5000 PSI.
   (B) Common brick shall conform to ASTM C-62 Grade SW with compressive strength of 5000 PSI.
   (C) Concrete masonry units shall conform to ASTM C-90 or C-145 Grade N-1.
   (D) Mortar shall conform to ASTM C-270, Type M or S.
   (E) Grout shall conform to ASTM C-476 fine or coarse.
3. Masonry shall have f'm = 1500 PSI. f'm is the compressive strength of the masonry at 28 days as determined by prism tests.
4. Prior to grouting cells, bars and cells must be inspected by the testing agency.
5. The base of each cell in which a bar is placed must have a cleanout hole.
6. The design of reinforced masonry construction is based on allowable stresses predicated on "with inspection" provisions, requiring that qualified masonry inspection take place on a continuous basis whenever masonry is being placed.
7. Reinforced masonry walls shall have bond beams at each floor level. Bond beam reinforcing shall be extended into and be continuous with all intersecting bond beams.
8. Anchors to masonry walls shall be 3/4" diameter expansion bolts or anchor bolts. Bolts shall be 2" shorter than wall thickness.
9. Bonding methods, ties, lintels and accessories shall be approved by the architect.
10. Submit shop drawings, with ample time for architect's review and approval, for structural elements including structural steel.
11. Masonry openings more than 16" wide require approved lintels.
12. Masonry openings for utilities are to be closed up with new brick work around the utility.
13. Provide and install lintels for openings in accordance with the schedule and details on S1.2. Where lintel abuts columns or walls, provide connections to such. (Submit shop drawing of connection detail for approval.)
14. Wall bearing beams shall have bearing plates of sufficient size to develop the maximum end reaction of the beam. Plates shall bear on concrete filled blocks having a compressive strength of 250.0 PSI.
15. Fill cores of concrete blocks under all bearing plates with concrete for a width equal to 3 times the bearing plate length.
16. Provide 1-#5 vertical reinforcing at 24" OC. @ elevator shaft, and 2#4 vertical reinforcing at 8" OC in CMU walls that must act as a vehicle barrier. This reinforcing shall be continuous full height.
17. Masonry block cells containing vertical reinforcing shall be grouted solid. Filling cells with mortar is unacceptable. The compressive strength of grout at the end of 28 days shall be 3000 PSI minimum.
18. Reinforced masonry walls shall have # 9 ga. wire ladder type joint reinforcement at 16" OC horizontal reinforcement.
19. Provide 2-#5 continuous horizontal bars in the top course (bond beam) of walls below the each floor level and the roof, and fill continuously with grout.
20. Provide 1-#5 additional vertical reinforcing bar at each corner, door or window jamb, and at any discontinuity in the wall.

STRUCTURAL TIMBER CONSTRUCTION

1. Timber construction shall conform to Part II "Design" as published in the "Timber Construction Manual" (AITC 4th Edition) and to "National Design Specification for Wood Construction" (NF.PA, 2012 Edition).
2. New timber for structural use shall have a moisture content as specified in the "National Design Specification for Wood Construction (NF.PA, 2012 Edition).
3. Timber construction shall conform to Article 23 of the "International Building Code".
4. Material properties for timber shall conform to the following:
   (A) For members with nominal 2" thickness. S-P-F #1/#2 or better (15% max MC).
   Allowable bending stress:
   Fb = 875 PSI (single member use)
   Fb = 1000 PSI (multiple member use)
   Allowable shear stress Fv = 135 PSI
   Compression parallel to grain = 1100 PSI
   Compression perpendicular to grain = 425 PSI
   Modulus of elasticity = 1,400,000 PSI
   (B) For members with nominal 4" thickness and greater. Douglas Fir-Select Structural (19% max MC).
   Allowable bending stress Fb = 1600 PSI
   Allowable shear stress Fv = 85 PSI
   Compression parallel to grain = 925 PSI
   Compression perpendicular to grain = 625 PSI
   Modulus of elasticity – 1, 600,000 PSI
   (C) For pressure-treated members with nominal 2" thickness, southern pine #1 or better (19% max MC).
   Allowable bending stress Fb = 1300 PSI
   Allowable shear stress Fv = 90 PSI
   Compression parallel to grain = 1550 PSI
   Compression perpendicular to grain = 565 PSI
   Modulus of elasticity = 1,500,000 PSI
   (D) For pressure-treated members with nominal 4" thickness and greater, Southern Pine #2 pressure-treated (19% max MC).
   Allowable bending stress Fb = 1250 PSI
   Allowable shear stress Fv = 95 PSI
   Compression parallel to grain – 725 PSI
   Compression perpendicular to grain = 440 PSI
   Modulus of elasticity = 1,400,000 PSI
   (E) For Glue-laminated members-Douglas Fir- Architectural Grade-Exterior Exposure. 24F-V8 Combination.
   Allowable bending stress Fb = 2,400 PSI
   Allowable shear stress Fv = 240 PSI
   Compression parallel to grain = 1,650 PSI
   Compression perpendicular to grain = 650 PSI
   Modulus of elasticity = 1,800,000 PSI
5. "PT" indicates pressure-treated lumber (to be used when in contact with concrete, masonry or weather).
6. '14" AJS 20's' etc. indicates engineered wood I-Joist with machine rated lumber flanges and OSB webs by the Boise Cascade Co. or equal.
7. '3-1/2" x14" LVL' etc. indicates laminated veneer lumber-2.0 E beam or post by the Boise Cascade Co. or equal.
8. Joist support by nailing is forbidden unless used with an approved hanger. Unless noted otherwise on plans, all flush framed joists and beams shall be framed with Simpson hangers as follows (or approved equals):

(A) 2x6; 2x8	Type 'U26'
(B) 2-2x6; 2-2x8	Type 'U26-2'
(C) 3-2x6; 3-2x8	Type 'U26-3'
(D) 2x10; 2x12	Type 'U210'
(E) 2-2x10; 2-2x12	Type 'U210-2'
(F) 3-2x10; 3-2x12	Type 'U210-3'
(G) 11-7/8" AJS 20's	Type 'ITS2.56/11.88"
(H) 14" BCI 6000's	Type 'ITS2.37/14"
(I) 14" BCI 60's	Type 'ITS2.37/14"
(J) 3-1/2" x 9-1/2" L.V.L.	Type 'GLTV3.59"
(K) 5-1/4" x 9-1/2" L.V.L.	Type 'GLTV5.59"
(L) 3-1/2" x 11-7/8" L.V.L.	Type 'GLTV5.511"
(M) 5-1/4" x 11-7/8" L.V.L.	Type 'GLTV5.511"
(N) 3-1/2" x 14" L.V.L.	Type 'GLTV5.514"
(O) 5-1/4" x 14" L.V.L.	Type 'GLTV5.514"

(It is the contractor's responsibility to determine correct hangers for all sloped and/or skewed conditions.)
9. Minimum bearing for all joists and rafters shall be 4".
10. Use double joists under all partitions.
11. Partition and outside stud walls shall be bridges once in their story height or at least every 4'-6".
12. Anchor bolts and bolts for structural timber shall be ASTM A 307. Standard cut washers shall be provided between wood and bolt head, and between wood and bolt nut unless steel plates or plate washers are used.
13. Exterior walls shall be framed with 2x8's at 16" C/C (unless noted on plan) with 32/16 – ¾" exterior plywood sheathing on one sides (unless noted on plan as both sides). Plywood to be nailed to studs with 10D galvanized nails at 4" on center at panel edges and at 12" on center at intermediate supports.
14. Interior walls indicated on plans shall be framed with 2x4's at 16" C/C or 2x6's at 16" C/C (see arch drawings).
15. Roof construction shall be as shown on the plans with 32/16-5/8" exterior plywood, or 12-7/8" thick SIPS (Structural Insulated Panels) panels.
16. Floor construction shall be as shown on the plans with 32/16-3/4" exterior tongue and groove plywood sheathing, glued and nailed to the joists and beams.
17. "Advantech" sheathing, of the same thickness, may be substituted for the plywood sheathing specified above. OSB is not acceptable.
18. Interior door headers shall be a minimum of 2-2x8's unless noted otherwise on the plans.
19. Exterior door and window headers shall be a minimum of 4-2x8's unless otherwise noted on the plans.
20. No joist shall be noted or drilled with holes without the specific approval of the architect.
21. No joist shall be repaired or reinforced in any way without the specific approval of the architect.
22. Beams built up of timbers shall be firmly nailed or bolted together.
23. Plywood shall be laid with face grain parallel to span; stagger all joints.
24. Sills shall be 2-2x8 (pressure-treated) (see plan) and shall be anchored with 5/8" diameter anchor bolts not more than 32" OC and at 8" from each corner.
25. Temporary erection bracing shall be provided to hold structural timber securely in position as described on the drawings. It shall not be removed until permanent bracing has been installed.
26. Timber shall be generally knot-free, with only small tight knots permitted and generally straight-grained.
27. Structural timber shall be identified by the grade mark of or certificate of inspection issued by a grading or inspection bureau or agency recognized as being competent.
28. Structural timber shall be visually stress-graded lumber in accordance with the provisions of ASTM designation D245-74, "Methods for Establishing Structural Grades and Related Allowable Properties for Visually Graded Lumber".
29. Timber shall be so handled and covered as to prevent marring and moisture absorption from snow or rain.
30. Steel plates and angles shall be new steel conforming to ASTM A36.

RENOVATION AND RESTORATION

1. The contractor shall notify the architect when, in the course of construction or demolition, conditions are uncovered which are unanticipated or otherwise appear to present a dangerous condition.
2. Damaged load bearing masonry shall be removed and replaced or repaired as directed by the architect.
3. New masonry shall be bonded or otherwise tied to adjacent masonry work.
4. Second-hand brick shall not be used in masonry bearing walls unless approval is given by the architect for each specific case.
5. Information regarding existing construction or conditions is based on available record drawings which may or may not truly reflect existing conditions. Such information is included on assumption that it may be of interest to the contractor, but the architect assumes no responsibility for its accuracy or completeness.
6. Verify all dimensions and conditions on the job. Discrepancies shall be brought immediately to the attention of the architect before proceeding with that part of the work.
7. Where new work will be adjacent to or framing existing construction, verify dimensions of existing construction prior to fabrication of new members.
8. Provide all labor and material for any framing required to connect new framing to existing construction. Wherever it is necessary to remove existing construction in order to construct new work, the affected area shall be patched and rebuilt to match existing adjacent work to satisfaction of the architect.
9. Details shown on any drawing shall be considered typical for all similar conditions.
10. Notify architect of any contemplated structural alteration in reasonable time to render and document the architect's decision.
11. Structural materials and components shall have prior approval of the architect.
12. Structural work on this project shall be performed under the supervision of an inspector approved by the architect. Alterations or modifications not indicated on the drawings shall be approved by the architect in writing before such work is initiated. The architect will periodically observe structural elements to assure general compliance with the contract documents, but detailed inspection and testing requirement will be prepared by an independent testing agent hired by the owner. Deficiencies not indicated on the drawings or exposed during construction shall be corrected as directed by the architect.
13. Structural alteration shall be preceded by adequate shoring and bracing.
14. Screw-type shoring posts shall be provided for existing work during the removal of existing bearing walls and structural members and the installation of new structural work.
15. Temporary shores shall be placed as close as practicable to the existing structural work being removed.
16. Headers shall be placed across top of shoring posts and shall be snug tight against underside of the structure above.
17. Shoring shall bear on sleepers to prevent damage to the structure below.
18. Temporary shores shall be individually designed, erected, supported, braced and maintained by the contractor to safely support all dead loads presently carried by the existing structural work being removed and any construction live loads.
19. Structural steel shall be completely installed before removing any shores.
20. Shores shall be released gradually and left loosely in place for at least 2 days to allow for structural shake out.

STRUCTURAL DESIGN LOADS

1. Dead loads
   (A) Weight of building components
2. Live loads
   (A) Main library floor–150 PSF
   (B) Public areas, stairs, etc. – 100 PSF
   (C) Second floor office/corridors – 80 PSF
   (D) Roof snow load – 40 PSF plus drift
   Pg =50 PSF; Is=1.0;Ce=1.0;Ct=1.1;
3. Wind loads – Per Mass. Code and ASCE7-10; Exposure B
   Risk Category II-V (Ult.) = 125 MPH
   Directional Method

Height	Wind Load (Ult.) (PSF)
0'-15'	21.0
15'-20'	22.8
20'-30'	25.4
30'-40'	26.5

4. Earthquake loads- Per Mass. Code and ASCE7-10; Occupancy Category "II"
   Importance Factor I=1.0; Site Class "D"
   Seismic Performance Category 'B'
   For Renovation of Existing Structure- Level II-Work Area Method-no change of Occupancy Category; Small low roof addition. Existing lateral load resisting system (Unreinforced Masonry Shear Walls) is not being modified-analysis for 75% new IBC seismic loads did not over stress the system. Affected gravity load members are reinforced, already meet code, or have loads increased by less than 5% per IEBC criteria.
   For New Addition-Equivalent Lateral Force Procedure
   R=6.5; Cd=4.0 (Light Framed Walls w/Wood Panels Rated for Shear Resistance)
   Ss= .214; Fa=1.6; SDS=.226g
   S1=.07; Fv=2.4; SD1=_.110g
   Cs=.035; V=Cs x W; W= 710.0 Kips; V= 25.0 Kips (Ultimate)

R&G
Roome & Guarracino LLC
STRUCTURAL ENGINEERS
48 Grove Street, Somerville, MA
T: 617-628-1700 F: 617-628-1711

JOHNSON ROBERTS ASSOCIATES INC.
ARCHITECTS
15 PROPERZI WAY
SOMERVILLE, MA
02143-3228

Revisions:

CONCORD FREE PUBLIC LIBRARY EXPANSION

Sheet Title:

GENERAL NOTES

Date: 24-Oct-19 Drawn By: BSM

Scale: NTS Project No.: 1714

S1.1

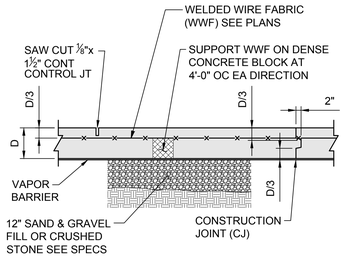

1 SLAB ON GRADE

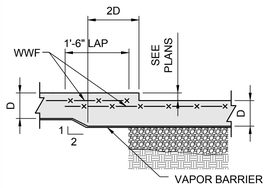

2 SLAB ON GRADE AT DEPRESSIONS

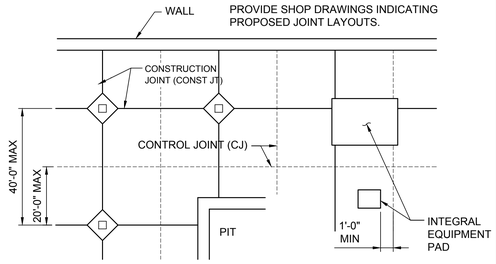

3 LAYOUT OF CONTROL, & CONSTRUCTION JOINTS IN CONCRETE SLABS ON GRADE

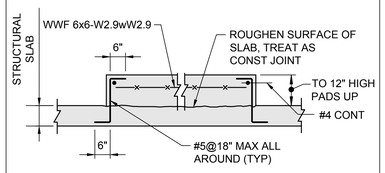

THE EXACT SIZE, SHAPE AND LOCATION OF EQUIPMENT (HOUSEKEEPING) PAD(S) SHALL BE DETERMINED BY THE CONTRACTOR AFTER APPROVAL OF SHOP DRAWINGS FOR EQUIPMENT. ANCHOR BOLTS WHERE REQUIRED SHALL BE SIZED AND LOCATED ACCORDING TO MANUFACTURER'S REQUIREMENTS.

4 CONCRETE EQUIPMENT PAD

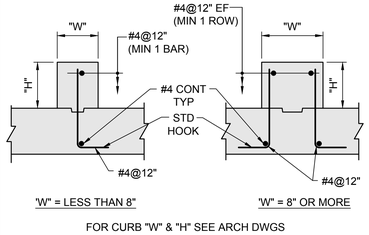

FOR CURB "W" & "H" SEE ARCH DWGS

5 CONCRETE CURB DETAIL

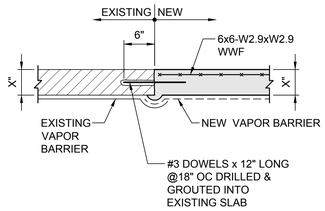

6 TYPICAL DETAIL @NEW SLAB INFILL

CATEGORY

STRUCTURAL ELEMENT	CONCRETE COVER	CATEGORY ACCORDING TO CENTER-TO-CENTER BAR SPACING			
		$\leq 3DIA_b$	$>3DIA_b$ $<4DIA_b$	$\geq 4DIA_b$ $<6DIA_b$	$\geq 6DIA_b$
BEAMS, COLUMNS, AND INNER LAYER OF WALLS OR SLABS	$\leq DIA_b$	1	1	1	2
	$>DIA_b$	1	3	5	6
ALL OTHERS	$\leq DIA_b$	1	1	1	2
	$>DIA_b$ $<2DIA_b$	1	3	3	4
	$\geq 2DIA_b$	1	3	5	6

TYPICAL ABBREVIATIONS
DIA_b = NOMINAL BAR DIAMETER
> = GREATER THAN
≥ = EQUAL TO OR GREATER THAN
< = LESS THAN
≤ = EQUAL TO OR LESS THAN

MINIMUM SPLICE AND EMBEDMENT LENGTH SCHEDULE

(UNLESS SHOWN OTHERWISE ON DRAWINGS)

CLASS B TENSION SPLICE — Fy=60000 PSI

f = 4000 PSI,NORMAL WEIGHT

BAR SIZE	TOP BARS CATEGORY						OTHER BARS CATEGORY					
	1	2	3	4	5	6	1	2	3	4	5	6
#3	18"	18"	18"	18"	18"	18"	16"	16"	16"	16"	16"	16"
#4	26"	24"	24"	24"	24"	24"	20"	19"	19"	19"	19"	19"
#5	40"	32"	30"	30"	30"	30"	31"	25"	23"	23"	23"	23"
#6	57"	45"	40"	36"	36"	36"	44"	35"	31"	28"	28"	28"
#7	77"	62"	54"	43"	42"	42"	59"	48"	42"	33"	33"	33"
#8	102"	81"	71"	57"	51"	48"	78"	63"	55"	44"	39"	37"
#9	129"	103"	90"	72"	64"	55"	99"	79"	69"	56"	50"	42"
#10	163"	131"	114"	92"	82"	65"	126"	101"	88"	70"	63"	50"
#11	200"	160"	140"	112"	100"	80"	154"	123"	108"	86"	77"	62"

1. AVOID SPLICES IN REGIONS OF MAXIMUM MOMENT. IF THIS IS NOT POSSIBLE STAGGER SPLICES SO THAT NOT MORE THAN 50% OF THE BARS ARE SPLICED WITHIN A REQUIRED SPLICE LENGTH OTHERWISE INCREASE SPLICE LENGTH BY 30%.
2. TOP BARS ARE DEFINED AS HORIZONTAL BARS WITH MORE THAN 12" OF CONCRETE CAST IN THE MEMBER BELOW THE REINFORCEMENT. WALL REINF IS CLASSIFIED AS OTHER BARS.
3. FOR LIGHTWEIGHT AGGREGATE CONCRETE MULTIPLY THE VALUES ABOVE BT 1.3.

7

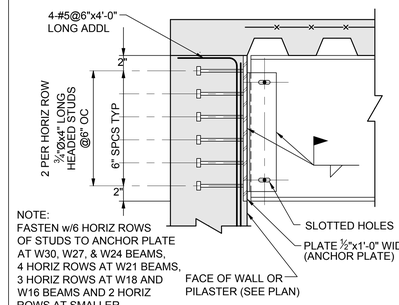

NOTE:
FASTEN w/6 HORIZ ROWS OF STUDS TO ANCHOR PLATE AT W30, W27, & W24 BEAMS, 4 HORIZ ROWS AT W21 BEAMS, 3 HORIZ ROWS AT W18 AND W16 BEAMS AND 2 HORIZ ROWS AT SMALLER.

8 TYP BEAM SUPPORT AT CONCRETE WALLS

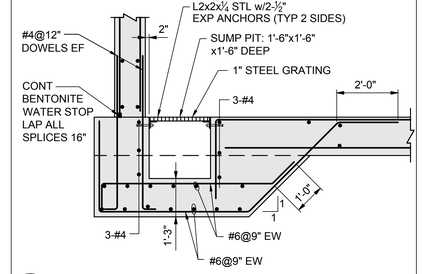

9 ELEVATOR SUMP PIT

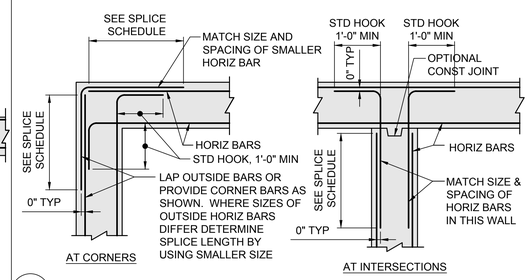

10 HORIZONTAL WALL REINFORCEMENT PLANS

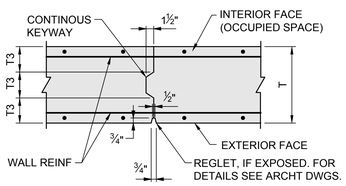

11 VERTICAL CONSTRUCTION JOINT IN CONCRETE WALLS

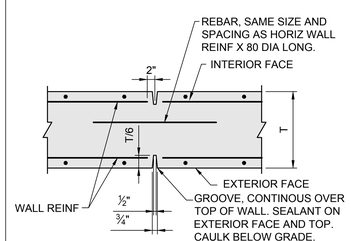

12 VERTICAL CONTROL JOINT IN CONCRETE WALLS

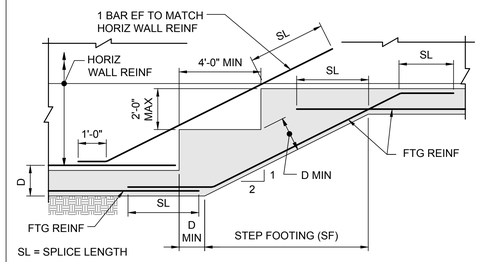

13 ELEVATION OF STEPPED FOOTING AT FOUNDATION WALL

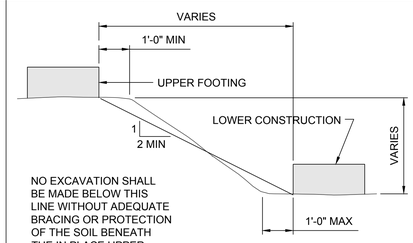

NO EXCAVATION SHALL BE MADE BELOW THIS LINE WITHOUT ADEQUATE BRACING OR PROTECTION OF THE SOIL BENEATH THE IN PLACE UPPER FOOTING.

14 SLOPE BETWEEN FOOTING & ADJACENT CONSTRUCTION

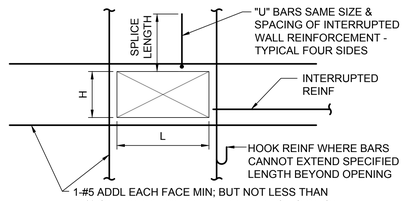

NOTES:
1. WALL OPENINGS SHALL BE COORDINATED AND DETAILED ON THE REINFORCEMENT SHOP DRAWINGS.

15 REINFORCEMENT AT OPENINGS IN REINFORCED CONCRETE WALLS

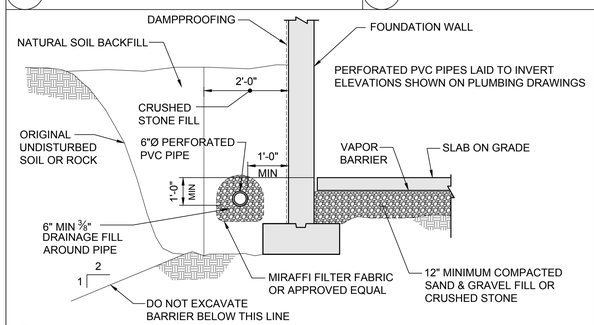

16 PERIMETER & UNDERSLAB DRAINAGE

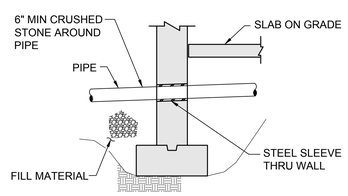

PIPE SHALL NOT PASS UNDER OR THRU WALL FOOTING. LOWER FOOTING BY STEPPING TO AVOID INTERFERENCE.

17 PIPE THRU WALL

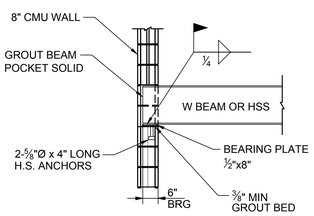

18 STEEL BEAM PERPENDICULAR TO WALL

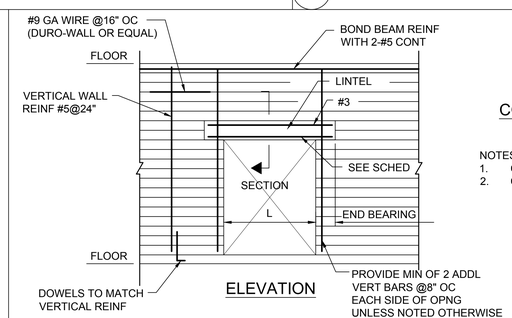

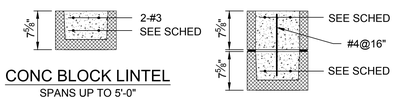

NOTES:
1. CONCRETE fc=3000 PSI
2. CMU fm=1500 PSI MIN

CLEAR SPAN L	REINF IN LINTELS 8" WALL	END BEARING
UP TO 4'-0"	2-#4	8"
TO 5'-0"	2-#4	8"
TO 6'-0"	2-#4	8"
TO 7'-0"	2-#5	8"
TO 8'-0"	2-#6	8"
TO 9'-0"	3-#6	12"

19 REINFORCED CONCRETE LINTELS & TYPICAL REINF ARRANGEMENT FOR CMU WALLS

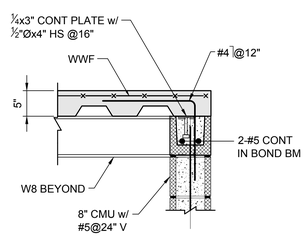

SEE DETAIL 18 ON S1.2 FOR BEAM TO WALL CONNECTION

SCALE: 1" = 1'-0"

20

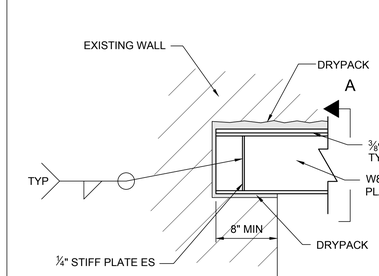

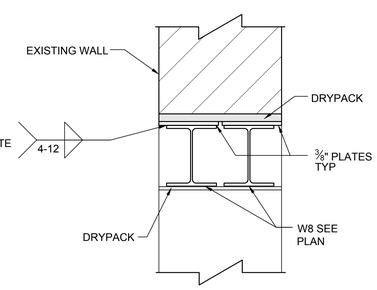

SECTION A

21

SEE DETAIL 21 ON S1.2 FOR INFO NOT SHOWN

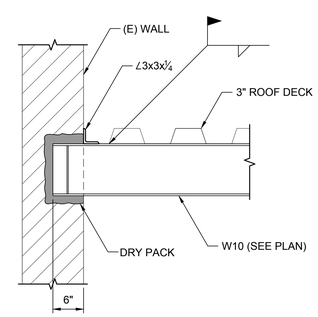

SCALE: 1" = 1'-0"

22

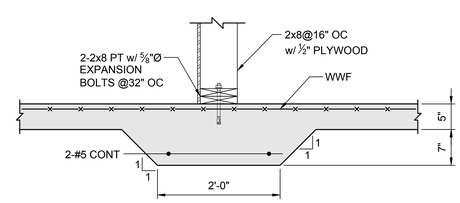

SCALE: 1" = 1'-0"

23

R&G
Roome & Guarracino LLC
STRUCTURAL ENGINEERS
48 Grove Street, Somerville, MA
T: 617-628-1700 F: 617-628-1711

JOHNSON ROBERTS ASSOCIATES INC.
ARCHITECTS
15 PROPERZI WAY
SOMERVILLE, MA
02143-3228

Revisions:

CONCORD FREE PUBLIC LIBRARY EXPANSION

Sheet Title:

TYPICAL DETAILS

Date: 24-Oct-19 Drawn By: BSM

Scale: NTS Project No.: 1714

S1.2

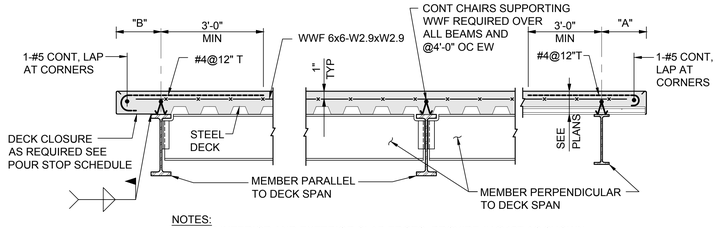

NOTES:
1. AT INTERIOR AND EXTERIOR SLAB EDGES, PROVIDE #4@12T AS SHOWN WHERE DIMENSION "A" OR "B" EXCEEDS 6". DIMENSION "A" SHALL NOT EXCEED 2'-0".

1 TYPICAL REINFORCING IN STEEL DECK SUPPORTED SLABS

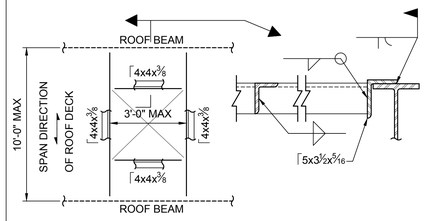

2 FRAMING FOR OPENINGS IN STEEL ROOF DECK (NO CONCRETE)

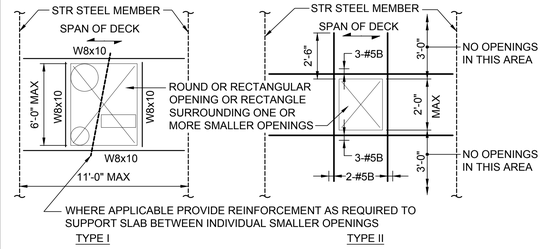

3 REINFORCEMENT AT OPENINGS IN SLABS WITH COMPOSITE STEEL DECK

4

STEEL ANGLE LINTEL SCHEDULE

MASONRY OPENING	WALL THICKNESS			
	4" WALL	6" WALL	8" WALL	12" WALL
3'-0"	1- ⌊3½ x 3½ x ¼	2-⌋⌊3 x 2½ x ¼	2-⌋⌊3½ x 3½ x ¼	3-⌋⌋⌊3½ x 3½ x ¼
4'-0"	1- ⌊4 x 3½ x ¼	2-⌋⌊3 x 2½ x ¼	2-⌋⌊4 x 3½ x ¼	3-⌋⌋⌊4 x 3½ x ¼
5'-0"	1- ⌊4 x 3½ x ¼	2-⌋⌊3½ x 2½ x ¼	2-⌋⌊5 x 3½ x ¼	3-⌋⌋⌊5 x 3½ x ¼
6'-0"	1- ⌊5 x 3½ x ¼	2-⌋⌊3½ x 2½ x ¼	2-⌋⌊5 x 3½ x ¼	3-⌋⌋⌊5 x 3½ x ¼
9'-0"	1- ⌊6 x 3½ x ⅜	2-⌋⌊3½ x 2½ x ¼	2-⌋⌊6 x 3½ x ⅜	3-⌋⌋⌊6 x 3½ x ⅜

1. PROVIDE AND INSTALL LINTEL ANGLES FOR MASONRY OPENINGS IN ACCORDANCE WITH THE SCHEDULE ABOVE. INSTALL LONG LEG VERTICAL. SEE ARCHT & MECH PLANS FOR LOCATIONS.
2. PROVIDE 6" MIN BEARING AT EACH END BUT NOT LESS THAN 1" PER FOOT OF SPAN. FILL 2 COURSES OF MASONRY BELOW BEARING WITH MORTAR.
3. WHERE MINIMUM BEARING CANNOT BE PROVIDED, ATTACH SECURELY TO ADJACENT STRUCTURAL MEMBERS OR PROVIDE SEPARATE SUPPORTS.
4. WHERE LINTELS OCCUR IN EXTERIOR WALLS MINIMUM THICKNESS SHALL BE 5/16" AND ANGLES SHALL BE HOT DIP GALVANIZED.
5. WHERE WALL THICKNESS EXCEEDS 12" PROVIDE ONE ADDITIONAL ANGLE FOR EACH ADDITIONAL 4" OF WALL.

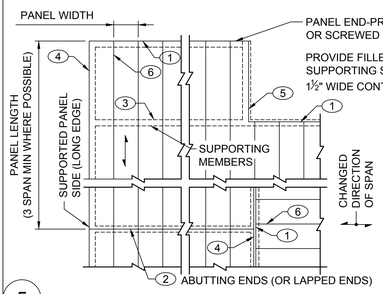

A. LOCATIONS ON STEEL DECK REQUIRING ¾" DIA PUDDLE WELDS @12" ON CENTER:
1. PANEL ENDS
2. ABUTTING ENDS - EACH PANEL LAPPED ENDS - AT CENTER OF LAP
3. PANEL INTERMEDIATE SUPPORTS

B. LOCATIONS ON STEEL DECK REQUIRING ¾" DIA PUDDLE WELDS @12" ON CENTER:
4. PANEL SIDES
5. PANEL SIDE WITH FILLER PIECE, FILLER-TO-PANEL AND FILLER TO SUPPORTING STEEL

C. LOCATIONS ON STEEL DECK REQUIRING 1" SEAM WELDS OR BUTTON PUNCH @ 24" ON CENTER.
6. PANEL SIDE LAPS

5 SCHEMATIC PLAN SHOWING TYPICAL CONNECTION OF STEEL DECK

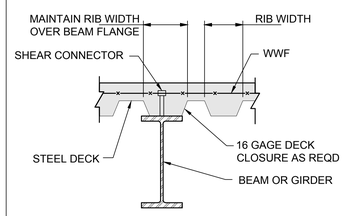

DECK MUST BE IN CONTACT WITH BEAM TO ENSURE THAT FLANGE DOES NOT FALL UNDER HIGH CELL RESULTING IN UNBRACED BEAM.

6 STEEL DECK SPANNING PARALLEL WITH STEEL SLAB

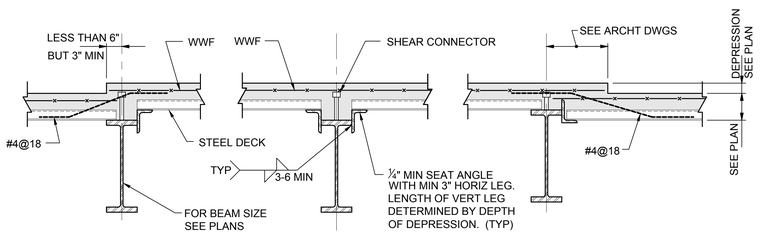

7 STEEL DECK AT CHANGES IN SLAB ELEVATION OR SLAB THICKNESS

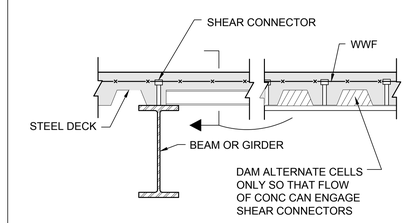

8 STEEL DECK DIRECTION CHANGE

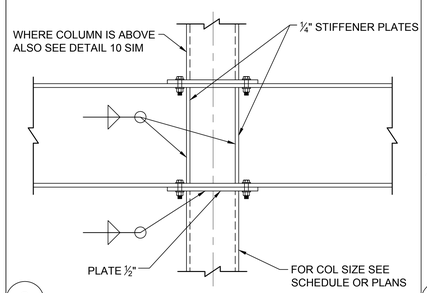

9 TYPICAL COLUMN CAP PLATE DETAIL

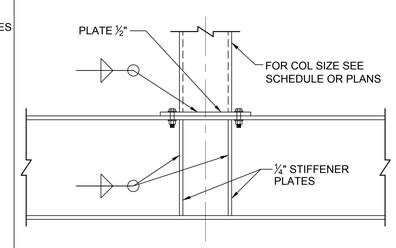

10 TYPICAL DETAIL AT BASE PLATE OF TRANSFER BEAMS

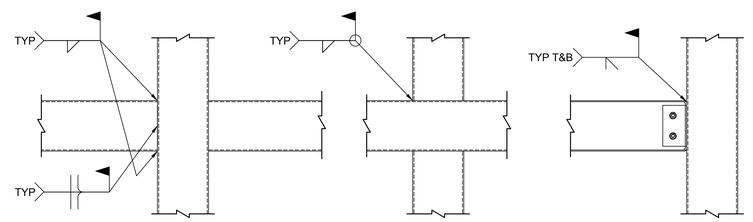

TYPICAL TUBE TO TUBE CONNECTION

TYPICAL TUBE TO TUBE CONNECTION

BEAM TO TUBE COLUMN MOMENT CONNECTION

SHOWN THUS ON PLAN

11

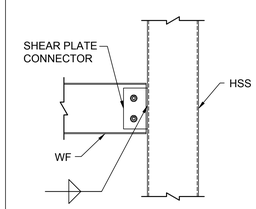

12 TYPICAL BEAM TO COLUMN CONNECTION

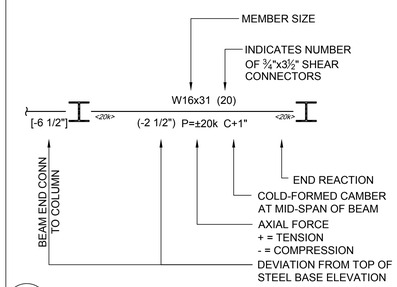

13 BEAM EXPLANATION DIAGRAM

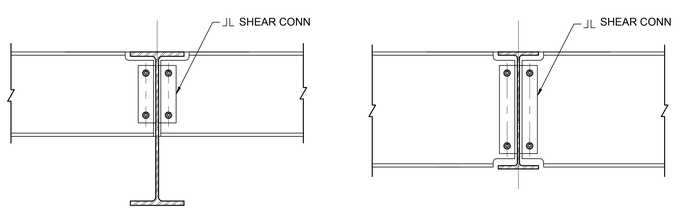

14 TYPICAL BEAM TO BEAM CONNECTION

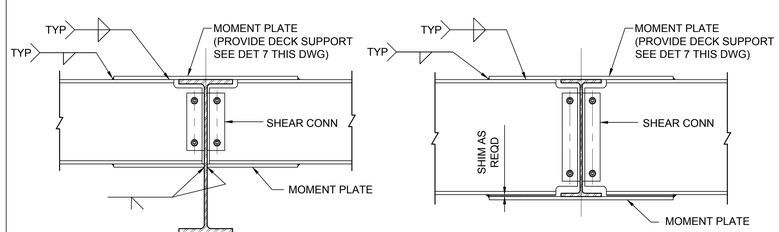

TYPE A

TYPE B

NOTES:
1. SHEAR CONNECTION SHALL BE DESIGNED FOR THE BEAM END REACTIONS.
2. DESIGN MOMENT PLATES FOR THE FULL MOMENT CAPACITY OF THE BEAM.

15 BEAM TO BEAM MOMENT CONNECTION

SHOWN THUS ON PLAN

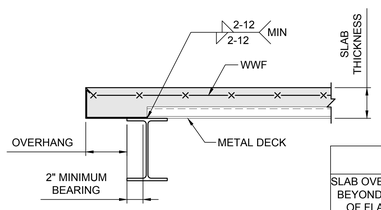

NOTE:
TABLE INDICATES MINIMUM POUR STOP UNLESS NOTED OTHERWISE ON DETAILS

POUR STOP SCHEDULE

SLAB OVERHANG BEYOND EDGE OF FLANGE	POUR STOP THICKNESS		
	≤ 4" SLAB	≤ 5½" SLAB	≤ 6½" SLAB
< 3"	18 GAGE	16 GAGE	16 GAGE
3" TO 6"	16 GAGE	14 GAGE	12 GAGE
6" TO 9"	12 GAGE	12 GAGE	12 GAGE
9" TO 13"	¼" BENT PLATE	¼" BENT PLATE	¼" BENT PLATE
13" TO 16"	5/16" BENT PLATE	5/16" BENT PLATE	5/16" BENT PLATE

16

SCALE: 1½" = 1'-0"

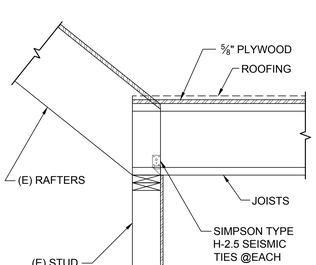

17

SCALE: 1" = 1'-0"

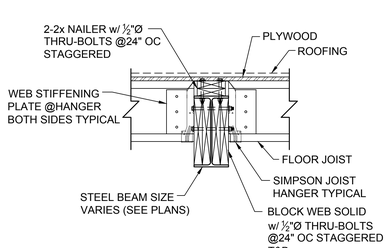

18

SCALE: 1" = 1'-0"

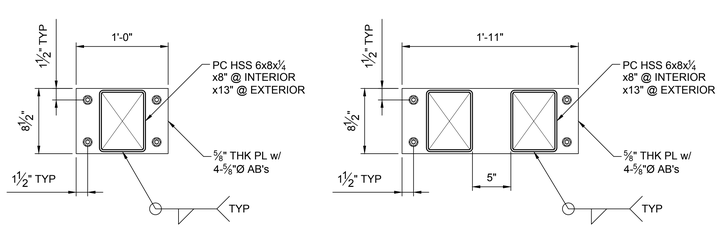

19 TYPICAL BASE FOR GLU-LAM POST / POSTS

SCALE: 1½" = 1'-0"

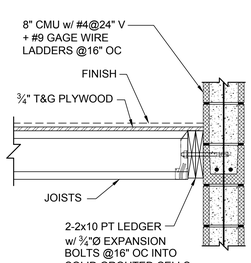

20

SCALE: 1" = 1'-0"

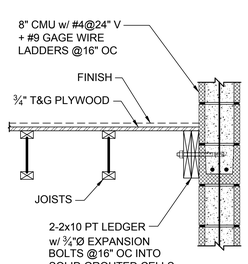

21

SCALE: 1" = 1'-0"

R&G
Roome & Guarracino LLC
STRUCTURAL ENGINEERS
48 Grove Street, Somerville, MA
T: 617-628-1700 F: 617-628-1711

JOHNSON ROBERTS ASSOCIATES INC.
ARCHITECTS
15 PROPERZI WAY
SOMERVILLE, MA
02143-3228

Revisions:

CONCORD FREE PUBLIC LIBRARY EXPANSION

Sheet Title:

TYPICAL DETAILS

Date: 24-Oct-19 Drawn By: BSM

Scale: NTS Project No.: 1714

S1.3

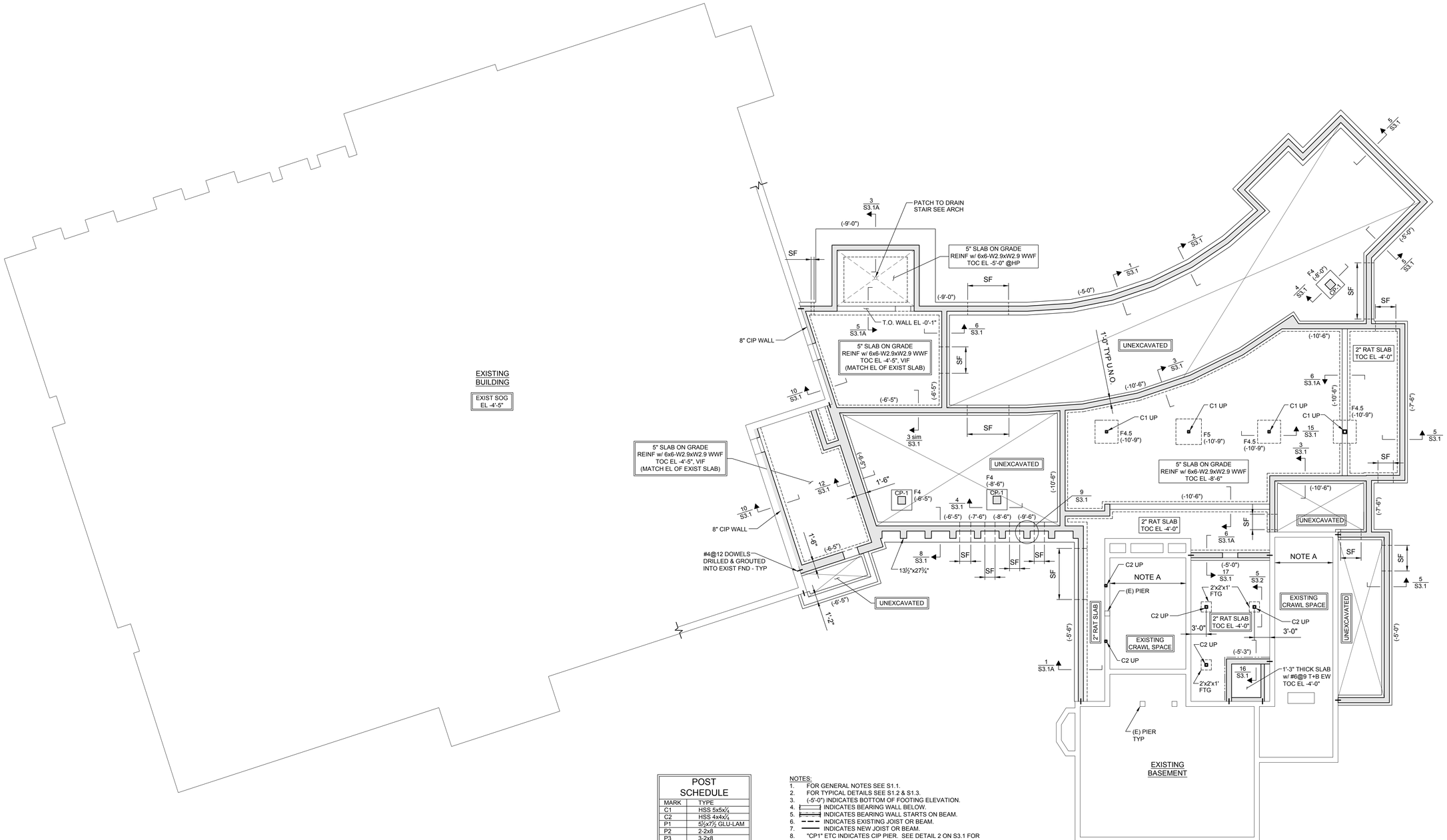

FOUNDATION PLAN

POST SCHEDULE	
MARK	TYPE
C1	HSS 5x5x¼
C2	HSS 4x4x¼
P1	5½x7½ GLU-LAM
P2	2-2x8
P3	3-2x8
P4	4-2x8
P5	3½x3½ LVL
P6	3½x5¼ LVL
P7	5¼x5¼ LVL

FOOTING SCHEDULE 3.5 TSF (ALLOWABLE BEAM CAPACITY)		
MARK	TYPE	REINF
F4	4'-0"x4'-0"x1'-0"	4-#4 BEW
F4.5	4'-6"x4'-6"x1'-3"	4-#4 BEW
F5	5'-0"x5'-0"x1'-3"	4-#4 BEW

NOTES:
1. FOR GENERAL NOTES SEE S1.1.
2. FOR TYPICAL DETAILS SEE S1.2 & S1.3.
3. (-5'-0") INDICATES BOTTOM OF FOOTING ELEVATION.
4. INDICATES BEARING WALL BELOW.
5. INDICATES BEARING WALL STARTS ON BEAM.
6. INDICATES EXISTING JOIST OR BEAM.
7. INDICATES NEW JOIST OR BEAM.
8. "CP1" ETC INDICATES CIP PIER. SEE DETAIL 2 ON S3.1 FOR SIZE & REINFORCEMENT.
9. "SF" INDICATES STEPPED FOOTING SEE DETAIL 13 ON 1.2.
10. "F1" ETC INDICATES FOOTING TYPE SEE THIS DRAWING FOR SCHEDULE.

NOTE A:
UNDERPIN EXISTING FOUNDATION AS REQUIRED w/ 3'-0" WIDE MAXIMUM ALTERNATING PITS

R&G
Roome & Guarracino LLC
STRUCTURAL ENGINEERS
48 Grove Street, Somerville, MA
T: 617-628-1700 F: 617-628-1711

JOHNSON ROBERTS ASSOCIATES INC.
ARCHITECTS
15 PROPERZI WAY
SOMERVILLE, MA
02143-3228

PROJECT NORTH

Revisions:

CONCORD FREE PUBLIC LIBRARY EXPANSION

Sheet Title:

FOUNDATION PLAN

Date: 24-Oct-19 Drawn By: BSM

Scale: ⅛" = 1'-0" Project No.: 1714

S2.1

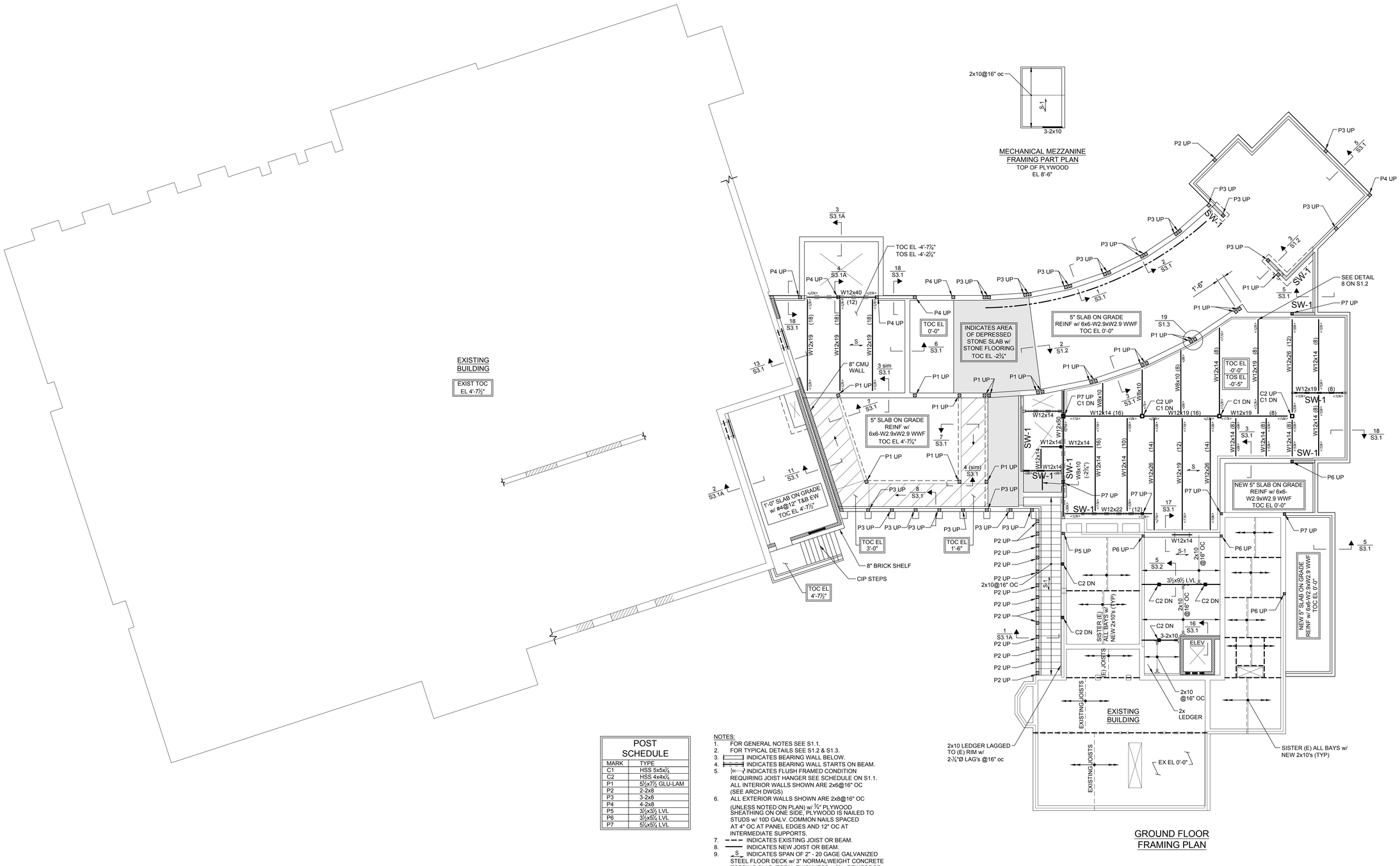

POST SCHEDULE	
MARK	TYPE
C1	HSS 5x5x¼
C2	HSS 4x4x¼
P1	5½x7½ GLU-LAM
P2	2-2x8
P3	3-2x8
P4	4-2x8
P5	3½x3½ LVL
P6	3½x5¼ LVL
P7	5½x5¼ LVL

NOTES:

1. FOR GENERAL NOTES SEE S1.1.
2. FOR TYPICAL DETAILS SEE S1.2 & S1.3.
3. INDICATES BEARING WALL BELOW.
4. INDICATES BEARING WALL STARTS ON BEAM.
5. INDICATES FLUSH FRAMED CONDITION REQUIRING JOIST HANGER SEE SCHEDULE ON S1.1. ALL INTERIOR WALLS SHOWN ARE 2x6@16" OC (SEE ARCH DWGS)
6. ALL EXTERIOR WALLS SHOWN ARE 2x8@16" OC (UNLESS NOTED ON PLAN) w/ ¾" PLYWOOD SHEATHING ON ONE SIDE, PLYWOOD IS NAILED TO STUDS w/ 10D GALV. COMMON NAILS SPACED AT 4" OC AT PANEL EDGES AND 12" OC AT INTERMEDIATE SUPPORTS.
7. INDICATES EXISTING JOIST OR BEAM.
8. INDICATES NEW JOIST OR BEAM.
9. S INDICATES SPAN OF 2" - 20 GAGE GALVANIZED STEEL FLOOR DECK w/ 3" NORMALWEIGHT CONCRETE TOPPING SLAB (TOTAL THICKNESS = 5"). REINFORCE w/ 6x6-W2.9xW2.9 WWF.
10. S-1 INDICATES SPAN OF ¾" T&G PLYWOOD GLUED & NAILED TO JOISTS & BEAMS.
11. SW-1 INDICATES 2x6@16" OC w/ ½" PLYWOOD SHEATHING ON ONE SIDE, PLYWOOD IS NAILED TO STUDS w/ 10D GALV. COMMON NAILS SPACED AT 4" OC AT PANEL EDGES AND 12" OC AT INTERMEDIATE SUPPORTS.

R&G
Roome & Guarracino LLC
STRUCTURAL ENGINEERS
48 Grove Street, Somerville, MA
T: 617-628-1700 F: 617-628-1711

JOHNSON ROBERTS ASSOCIATES INC.
ARCHITECTS
15 PROPERZI WAY
SOMERVILLE, MA
02143-3228

PROJECT NORTH

Revisions:

CONCORD FREE PUBLIC LIBRARY EXPANSION

Sheet Title:

GROUND FLOOR FRAMING PLAN

Date: 24-Oct-19 Drawn By: BSM

Scale: ⅛" = 1'-0" Project No.: 1714

S2.2

SECOND FLOOR CLERESTORY FRAMING PLAN

POST SCHEDULE	
MARK	TYPE
C1	HSS 5x5x¼
C2	HSS 4x4x¼
P1	5½x7½ GLU-LAM
P2	2-2x8
P3	3-2x8
P4	4-2x8
P5	3½x3½ LVL
P6	3½x5¼ LVL
P7	5¼x5¼ LVL

NOTES:

1. FOR GENERAL NOTES SEE S1.1.
2. FOR TYPICAL DETAILS SEE S1.2 & S1.3.
3. INDICATES BEARING WALL BELOW.
4. INDICATES BEARING WALL STARTS ON BEAM.
5. INDICATES FLUSH FRAMED CONDITION REQUIRING JOIST HANGER SEE SCHEDULE ON S1.1. ALL INTERIOR WALLS SHOWN ARE 2x6@16" OC (SEE ARCH DWGS)
6. ALL EXTERIOR WALLS SHOWN ARE 2x8@16" OC (UNLESS NOTED ON PLAN) w/ ¾" PLYWOOD SHEATHING ON ONE SIDE, PLYWOOD IS NAILED TO STUDS w/ 10D GALV. COMMON NAILS SPACED AT 4" OC AT PANEL EDGES AND 12" OC AT INTERMEDIATE SUPPORTS.
7. INDICATES EXISTING JOIST OR BEAM.
8. INDICATES NEW JOIST OR BEAM.
9. S-1 INDICATES SPAN OF ¾" T&G PLYWOOD GLUED & NAILED TO JOISTS & BEAMS.
10. R INDICATES SPAN OF 12⅞" THICK SIPS PANELS.
11. R-1 INDICATES SPAN OF ⅝" PLYWOOD.
12. R-2 INDICATES SPAN OF 3" DEEP, 20 GA GALV STEEL ROOF DECK.
13. SW-1 INDICATES 2x6@16" OC w/ ½" PLYWOOD SHEATHING ON ONE SIDE, PLYWOOD IS NAILED TO STUDS w/ 10D GALV. COMMON NAILS SPACED AT 4" OC AT PANEL EDGES AND 12" OC AT INTERMEDIATE SUPPORTS.

R&G
Roome & Guarracino LLC
STRUCTURAL ENGINEERS
48 Grove Street, Somerville, MA
T: 617-628-1700 F: 617-628-1711

JOHNSON ROBERTS ASSOCIATES INC.
ARCHITECTS
15 PROPERZI WAY
SOMERVILLE, MA
02143-3228

Revisions:

CONCORD FREE PUBLIC LIBRARY EXPANSION

Sheet Title:

SECOND FLOOR / CLERESTORY FRAMING PLAN

Date: 24-Oct-19 Drawn By: BSM

Scale: ⅛" = 1'-0" Project No.: 1714

S2.3

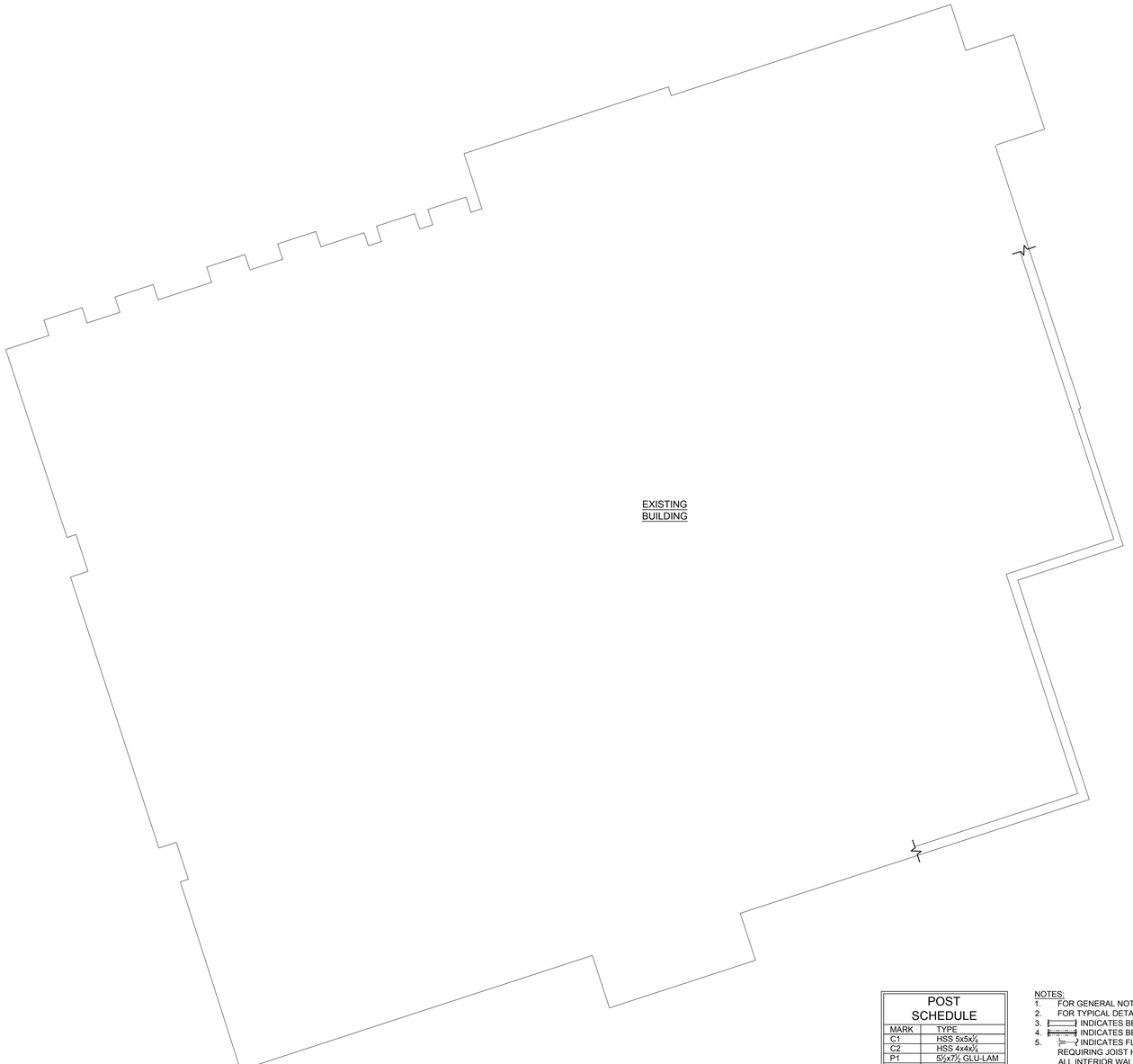

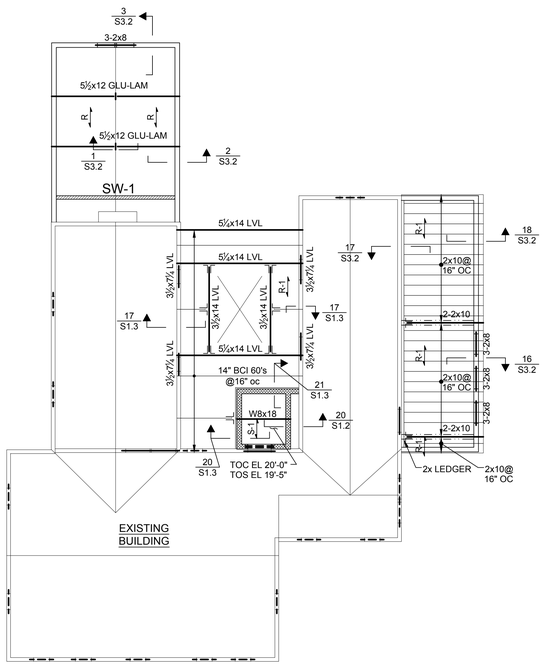

ROOF FRAMING PLAN

POST SCHEDULE	
MARK	TYPE
C1	HSS 5x5x¼
C2	HSS 4x4x¼
P1	5½x7½ GLU-LAM
P2	2-2x8
P3	3-2x8
P4	4-2x8
P5	3½x3½ LVL
P6	3½x5¼ LVL
P7	5½x5¼ LVL

NOTES:

1. FOR GENERAL NOTES SEE S1.1.
2. FOR TYPICAL DETAILS SEE S1.2 & S1.3.
3. INDICATES BEARING WALL BELOW.
4. INDICATES BEARING WALL STARTS ON BEAM.
5. INDICATES FLUSH FRAMED CONDITION REQUIRING JOIST HANGER SEE SCHEDULE ON S1.1. ALL INTERIOR WALLS SHOWN ARE 2x6@16" OC (SEE ARCH DWGS)
6. ALL EXTERIOR WALLS SHOWN ARE 2x8@16" OC (UNLESS NOTED ON PLAN) w/ ¾" PLYWOOD SHEATHING ON ONE SIDE. PLYWOOD IS NAILED TO STUDS w/ 10D GALV. COMMON NAILS SPACED AT 4" OC AT PANEL EDGES AND 12" OC AT INTERMEDIATE SUPPORTS.
7. INDICATES EXISTING JOIST OR BEAM.
8. INDICATES NEW JOIST OR BEAM.
9. S INDICATES SPAN OF ¾" T&G PLYWOOD GLUED & NAILED TO JOISTS & BEAMS.
10. S-1 INDICATES SPAN OF 2" - 20 GAGE GALVANIZED STEEL COMPOSITE FLOOR DECK w/ 3" NWC TOPPING SLAB (TOTAL THICKNESS = 5"). REINFORCE w/ 6x6-W2.9xW2.9 WWF.
11. R INDICATES SPAN OF 12⅞" THICK SIPS PANELS.
12. R-1 INDICATES SPAN OF ⅝" PLYWOOD.
13. R-2 INDICATES SPAN OF 3" DEEP, 20 GA GALV STEEL ROOF DECK.
14. SW-1 INDICATES 2x6@16" OC w/ ½" PLYWOOD SHEATHING ON ONE SIDE. PLYWOOD IS NAILED TO STUDS w/ 10D GALV. COMMON NAILS SPACED AT 4" OC AT PANEL EDGES AND 12" OC AT INTERMEDIATE SUPPORTS.

R&G
Roome & Guarracino LLC
STRUCTURAL ENGINEERS
48 Grove Street, Somerville, MA
T: 617-628-1700 F: 617-628-1711

JOHNSON ROBERTS ASSOCIATES INC.
ARCHITECTS
15 PROPERZI WAY
SOMERVILLE, MA
02143-3228

PROJECT NORTH

Revisions:

CONCORD FREE PUBLIC LIBRARY EXPANSION

Sheet Title:

THIRD FLOOR / ROOF FRAMING PLAN

Date: 24-Oct-19 Drawn By: BSM

Scale: ⅛" = 1'-0" Project No.: 1714

S2.4

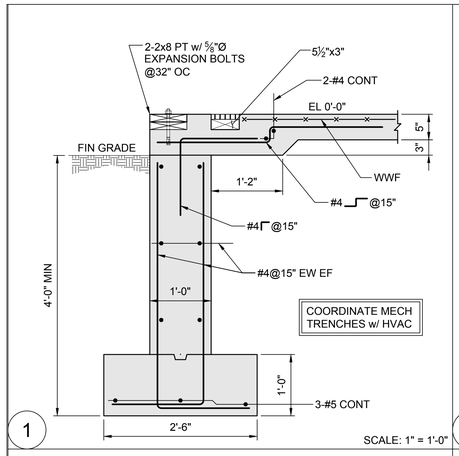

1

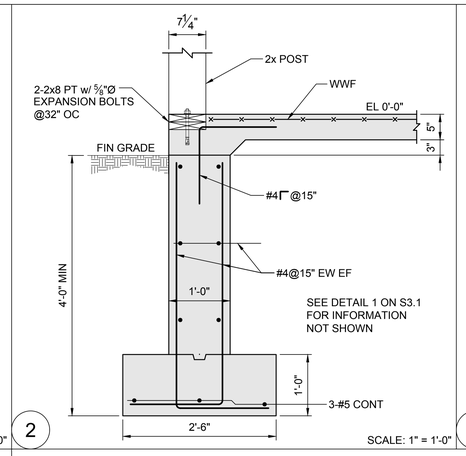

2

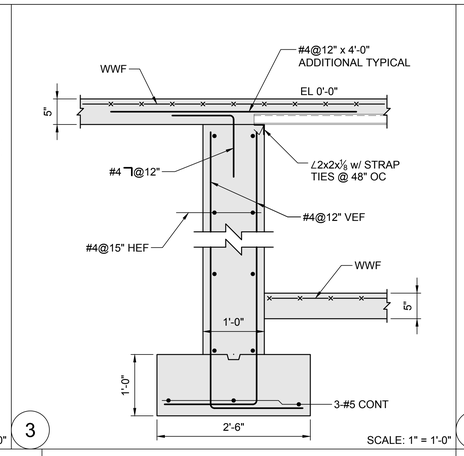

3

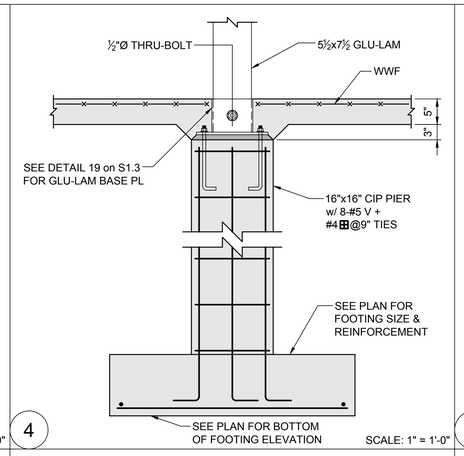

4

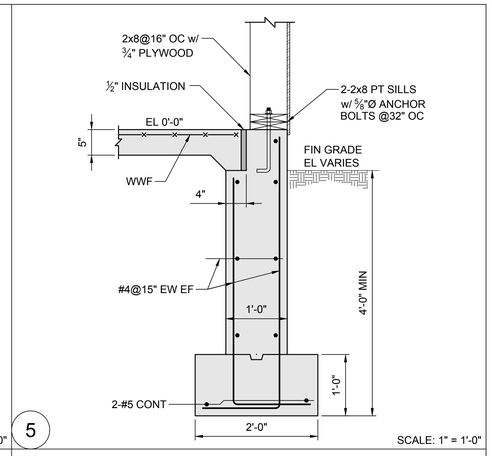

5

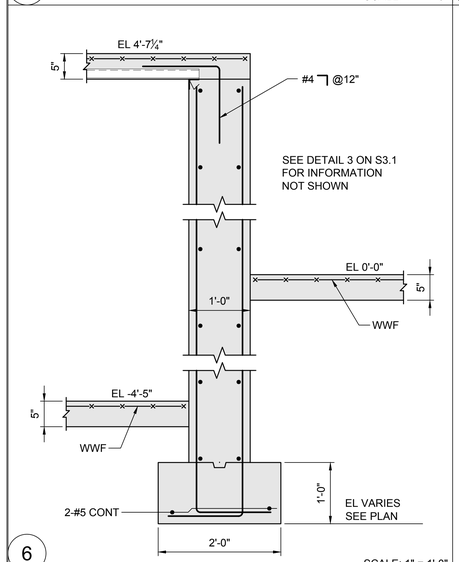

6

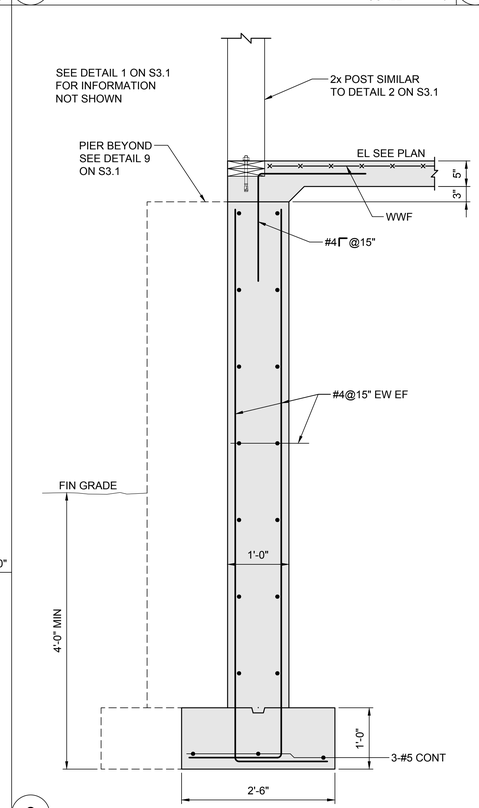

8

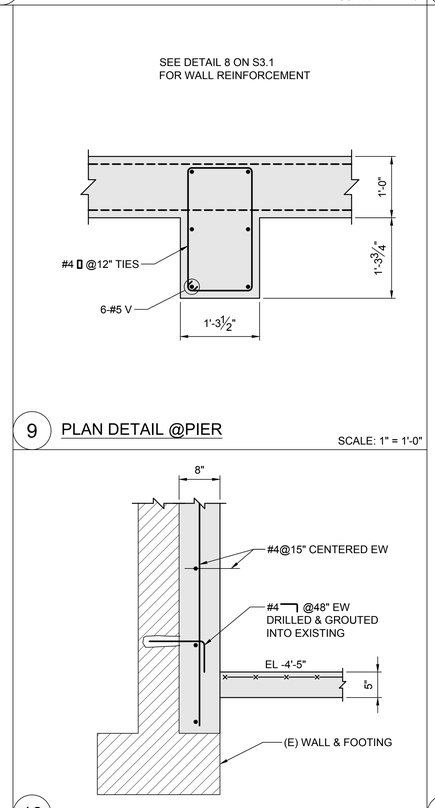

9 PLAN DETAIL @PIER

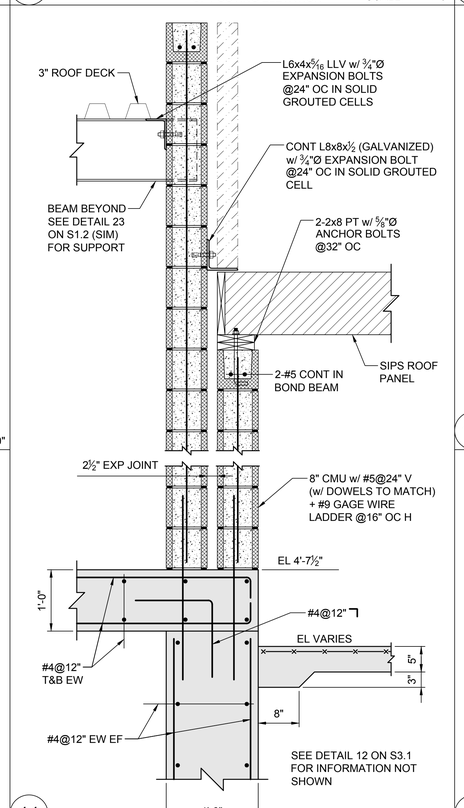

11

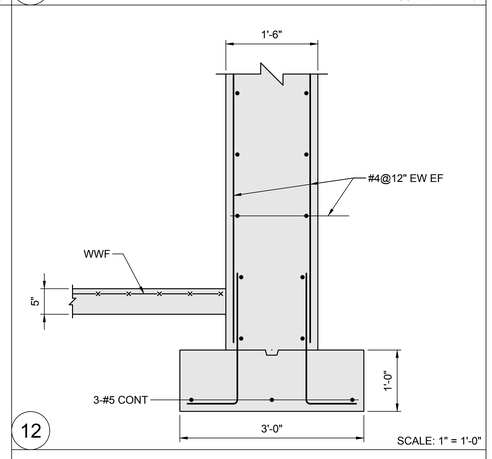

12

7

10

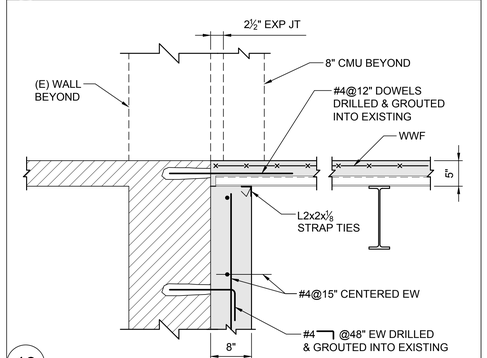

13

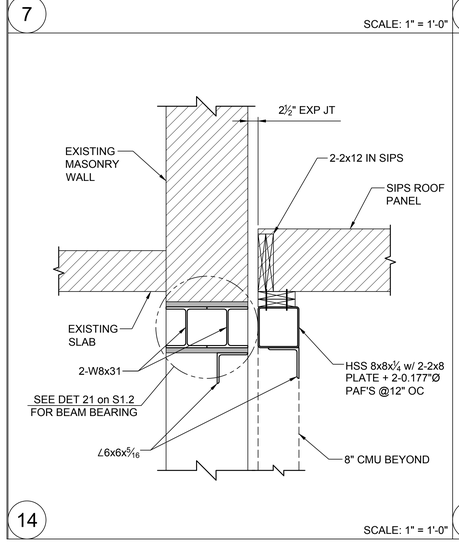

14

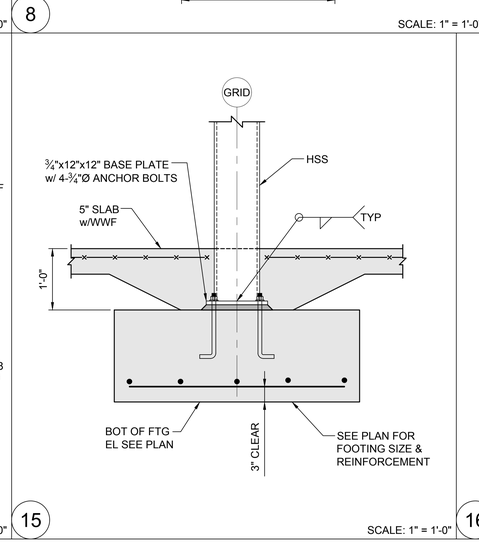

15

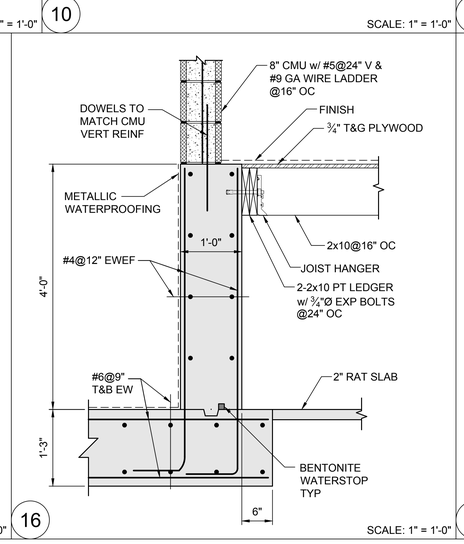

16

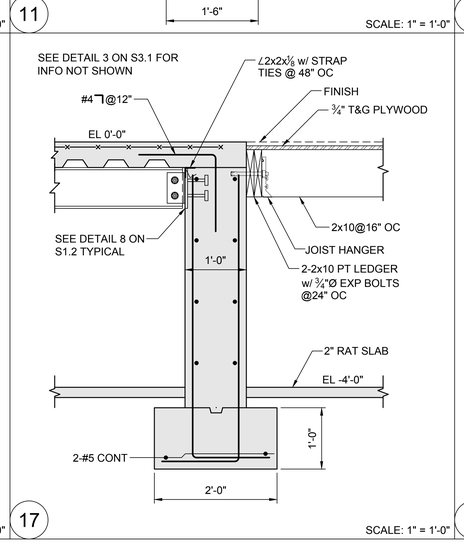

17

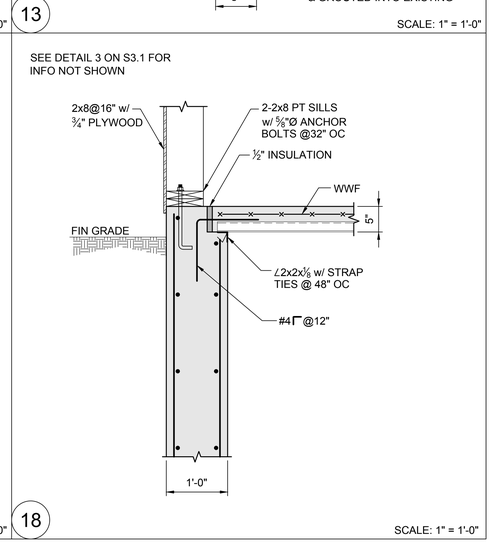

18

R&G
Roome & Guarracino LLC
STRUCTURAL ENGINEERS
48 Grove Street, Somerville, MA
T: 617-628-1700 F: 617-628-1711

JOHNSON ROBERTS ASSOCIATES INC.
ARCHITECTS
15 PROPERZI WAY
SOMERVILLE, MA
02143-3228

Revisions:

CONCORD FREE PUBLIC LIBRARY EXPANSION

Sheet Title:

SECTIONS

Date: 24-Oct-19 Drawn By: BSM

Scale: AS NOTED Project No.: 1714

S3.1

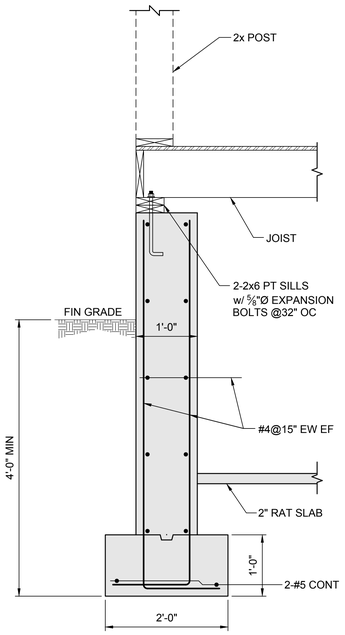

1 SCALE: 1" = 1'-0"

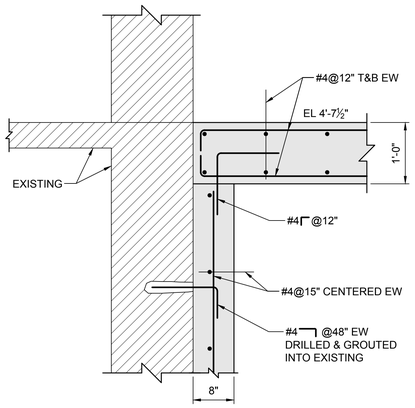

2 SCALE: 1" = 1'-0"

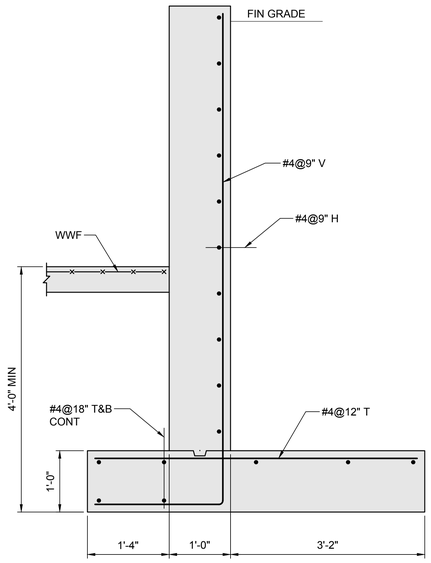

3 SCALE: 1" = 1'-0"

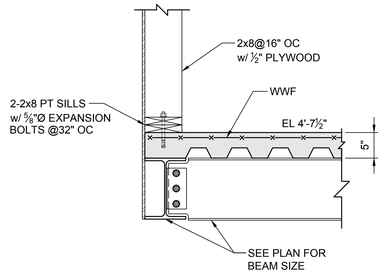

4 SCALE: 1" = 1'-0"

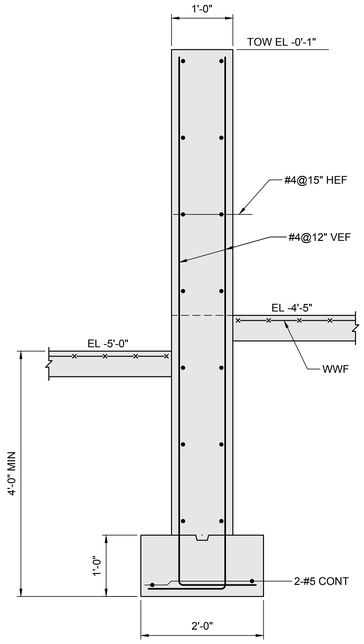

5 SCALE: 1" = 1'-0"

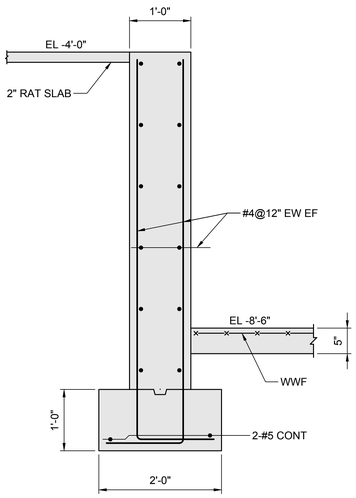

6 SCALE: 1" = 1'-0"

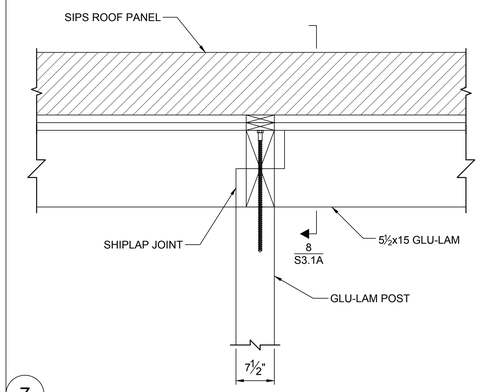

7 SCALE: 1" = 1'-0"

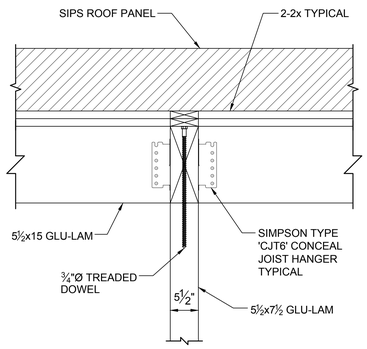

8 SCALE: 1" = 1'-0"

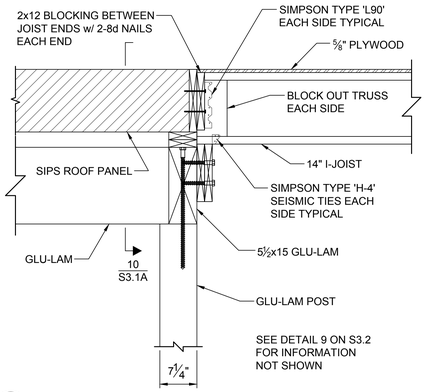

9 SCALE: 1" = 1'-0"

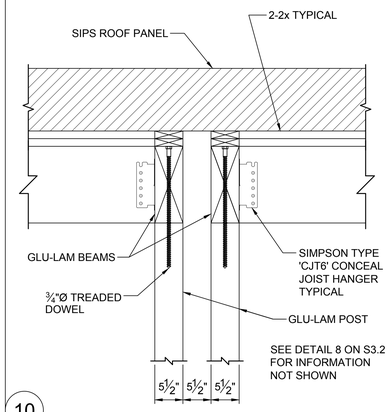

10 SCALE: 1" = 1'-0"

R&G
Roome & Guarracino LLC
STRUCTURAL ENGINEERS
48 Grove Street, Somerville, MA
T: 617-628-1700 F: 617-628-1711

JOHNSON ROBERTS ASSOCIATES INC.
ARCHITECTS
15 PROPERZI WAY
SOMERVILLE, MA
02143-3228

Revisions:

CONCORD FREE PUBLIC LIBRARY EXPANSION

Sheet Title:

SECTIONS

Date: 24-Oct-19 Drawn By: BSM

Scale: AS NOTED Project No.: 1714

S3.1A

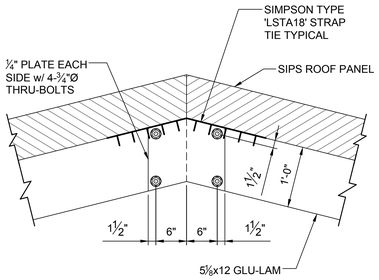

1 SCALE: 1" = 1'-0"

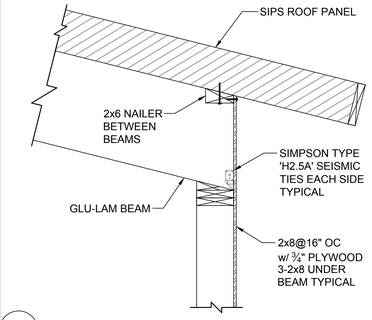

2 SCALE: 1" = 1'-0"

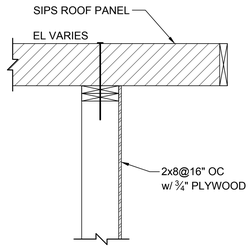

3 SCALE: 1" = 1'-0"

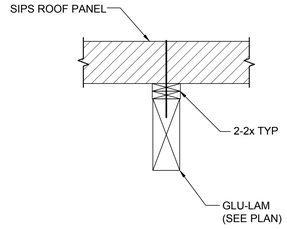

4 SCALE: 1" = 1'-0"

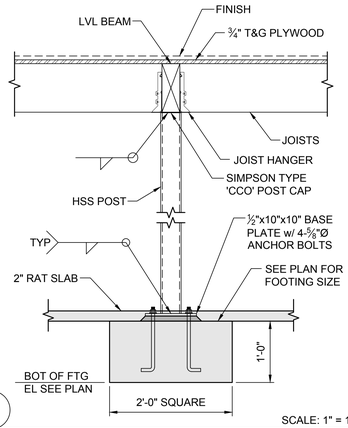

5 SCALE: 1" = 1'-0"

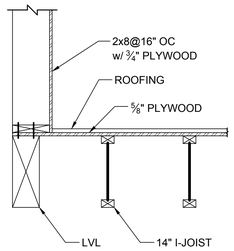

6 SCALE: 1" = 1'-0"

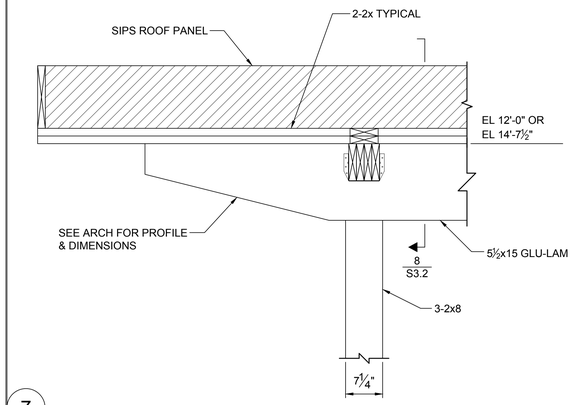

7 SCALE: 1" = 1'-0"

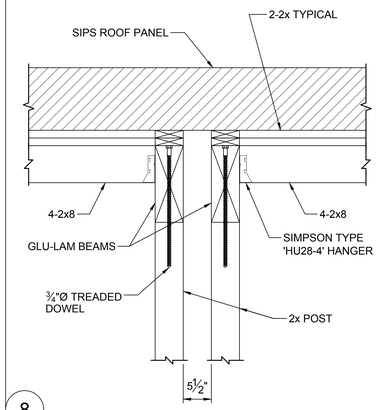

8 SCALE: 1" = 1'-0"

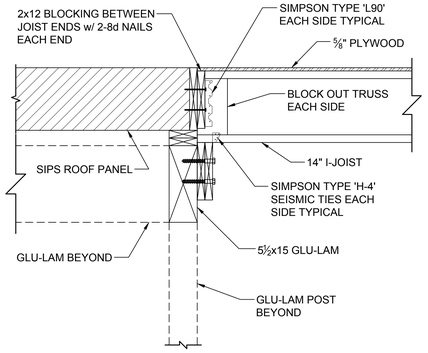

9 SCALE: 1" = 1'-0"

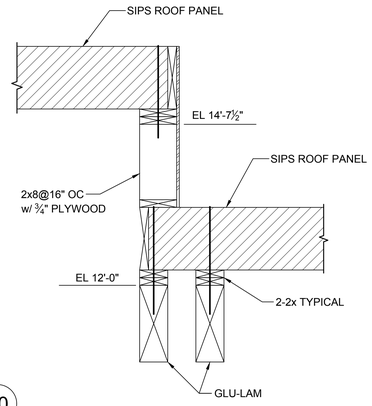

10 SCALE: 1" = 1'-0"

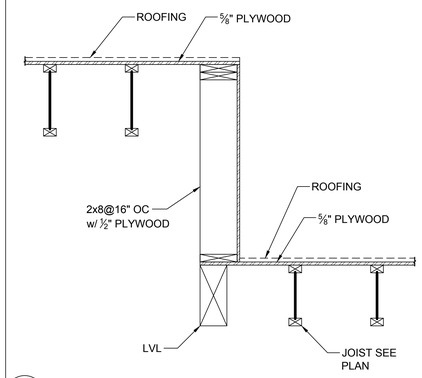

11 SCALE: 1" = 1'-0"

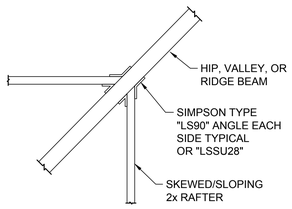

12 SKEWED/SLOPING RAFTER TO RIDGE, VALLEY, OR HIP SCALE: 1" = 1'-0"

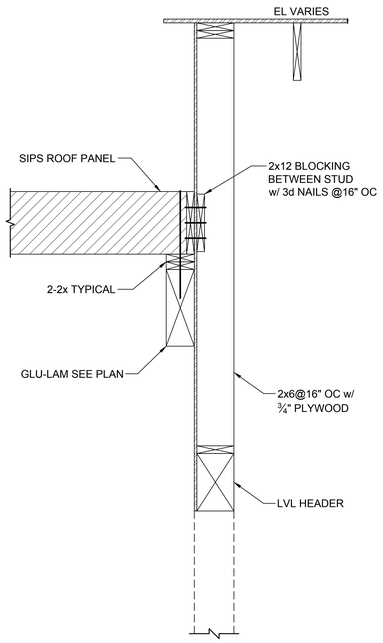

13 SCALE: 1" = 1'-0"

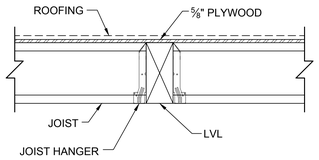

14 SCALE: 1" = 1'-0"

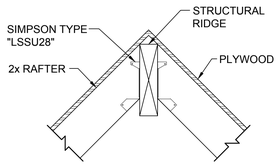

15 RAFTER CONNECTION @STRUCTURAL RIDGE SCALE: 1" = 1'-0"

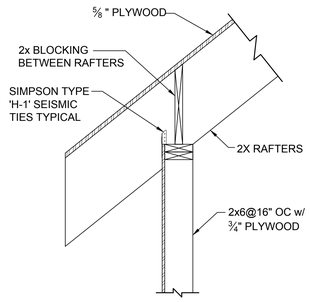

16 SCALE: 1" = 1'-0"

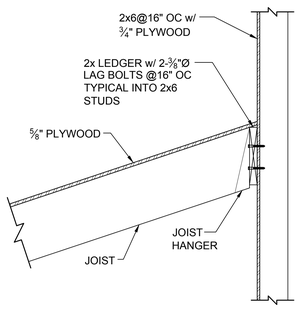

17 SCALE: 1" = 1'-0"

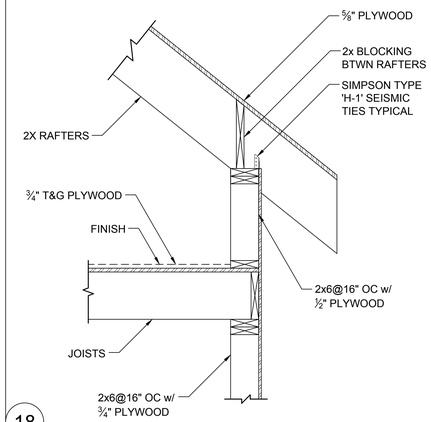

18 SCALE: 1" = 1'-0"

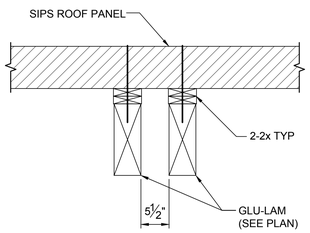

19 SCALE: 1" = 1'-0"

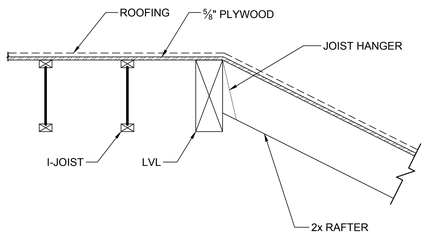

20 SCALE: 1" = 1'-0"

R&G
Roome & Guarracino LLC
STRUCTURAL ENGINEERS
48 Grove Street, Somerville, MA
T: 617-628-1700 F: 617-628-1711

JOHNSON ROBERTS ASSOCIATES INC.
ARCHITECTS
15 PROPERZI WAY
SOMERVILLE, MA
02143-3228

Revisions:

CONCORD FREE PUBLIC LIBRARY EXPANSION

Sheet Title:

SECTIONS

Date: 24-Oct-19 Drawn By: BSM

Scale: AS NOTED Project No.: 1714

S3.2

LEGEND

SYMBOL	ABBREV	DESCRIPTION
FSP	FSP	STANDPIPE (WET)
F	F	FIRE MAIN ABOVEGROUND
F	F	FIRE MAIN UNDERGROUND
SPR	SPR	SPRINKLER LINE (WET)
CA	CA	CLEAN AGENT SUPPRESSION LINE (GAS)
PA	PA	PREACTION SPRINKLER LINE (DRY)
SD	SD	SPRINKLER DRAIN
DSP	DSP	DRY SPRINKLER PIPE (DRY)
SPF	SPF	SPRINKLER PIPE FOAM
EC	EC	SIDEWALL SPRINKLER HEAD EXTENDED COVERAGE
		SIDEWALL SPRINKLER HEAD
		SIDEWALL SPRINKLER HEAD - FLAT PLATE CONCEALED
P	P	PENDENT SIDEWALL SPRINKLER HEAD
U	U	UPRIGHT SIDEWALL SPRINKLER HEAD
EC	EC	PENDANT SPRINKLER HEAD EXTENDED COVERAGE
		PENDANT SPRINKLER HEAD
		EXPOSED UPRIGHT SPRINKLER HEAD
		CONCEALED PENDANT SPRINKLER HEAD IN CEILING
D	D	DRY SIDEWALL SPRINKLER HEAD
W	W	WINDOW SPRINKLER
	DP,DN	PIPE DROP OR DOWN
	UP	PIPE RISE OR UP
		TEE LOOKING DOWN
		CAP ON END OF PIPE
		STRAINER
		UNION
	PG	PRESSURE GAGE
	CV	CHECK VALVE
	SCV	SUPERVISED CONTROL VALVE
	VIV	VALVE ON VERTICAL
	FS	FLOW SWITCH
	PIV	POST INDICATOR VALVE
	PRV	PRESSURE REDUCING VALVE
	ABD	AUTOMATIC BALL DRIP
		PRESSURE RELIEF VALVE
		SLOPED PIPE
	DACV	DRY ALARM CHECK VALVE
	WMG	WATER MOTOR GONG
	ITC	INSPECTORS TEST CONNECTION
	TYP.	TYPICAL
	AC	CONCEALED ABOVE CEILING
	@C	EXPOSED AT CEILING
	AP	ACCESS PANEL
	AFF	ABOVE FINISHED FLOOR
	F&I	FURNISH AND INSTALL
	PC	PLUMBING CONTRACTOR
	PA	PRE-ACTION
	FPC	FIRE PROTECTION CONTRACTOR
	GC	GENERAL CONTRACTOR
	HVAC	HEAT, VENT & AIR CONDITIONER. CONTRACTOR
	EC	ELECTRICAL CONTRACTOR
	DCVA	DOUBLE CHECK VALVE ASSEMBLY
	EXP	EXPOSED
	LPD	LOW POINT DRAIN
	ETR	EXISTING TO REMAIN
	ETBR	EXISTING TO BE REMOVED
	CTE	CONNECT TO EXISTING
	FDC	FIRE DEPARTMENT CONNECTION (STORZ)
	FDC	FIRE DEPARTMENT CONNECTION (SIAMESE)
	FDV	FIRE DEPARTMENT VALVE
	FDVC	FIRE DEPT. VALVE CABINET
	FDVC-SCVA	COMBINED FIRE DEPT. VALVE CABINET AND SPRINKLER FLOOR CONTROL VALVE ASSEMBLY
	FHC	FIRE HOSE CABINET
	SCVA	SPRINKLER FLOOR CONTROL VALVE ASSEMBLY
NAS		NO AUTOMATIC SPRINKLERS
T	TS	TAMPER (SUPERVISORY) SWITCH
F	FS	FLOW SWITCH
A	AC	AIR COMPRESSOR
P	PS	PRESSURE SWITCH
	ITS	REMOTE INSPECTORS TEST STATION
1		HYDRAULIC NODE POINT DESIGNATION
S I		IONIZATION SMOKE DETECTOR
S P		PHOTOELECTRIC SMOKE DETECTOR
FLOOR / ZONE / SYSTEM TYPE / HAZARD CLASSIFICATION / DENSITY GPM / AREA OF APPLICATION SQ.FT. / HOSE ALLOWANCE GPM / COVERAGE PER HEAD (SQ.FT.) / REMARKS:		DENOTES SPRINKLER DESIGN CRITERIA
		DENOTES SPRINKLER ZONE BOUNDARY

NOTE: NOT ALL SYMBOLS LISTED ARE APPLICABLE TO THIS PROJECT.

GENERAL NOTES

1. THE WORK HEREIN REQUIRED INCLUDES A HYDRAULICALLY DESIGNED SPRINKLER SYSTEM AS SPECIFIED IN THE DOCUMENTS AND AS APPROVED BY THE ARCHITECT.
2. THE FIRE PROTECTION DRAWINGS ARE DIAGRAMMATIC AND ARE TO BE USED FOR THE PURPOSE OF ESTABLISHING GENERAL LOCATIONS OF PIPING RUNS, SIZES OF PIPING, AND QUANTITIES OF FIXTURES AND EQUIPMENT TO BE FURNISHED HEREIN.
3. ALL PIPING SHOWN ON THESE PLANS OR THOSE TO BE DESIGNED HEREIN SHALL BE RUN CONCEALED ABOVE SUSPENDED CEILINGS, IN CHASES, OR IN PARTITIONS UNLESS SPECIFICALLY NOTED OTHERWISE.
4. ALL SPRINKLER HEADS IN CEILING TILES SHALL BE LOCATED IN THE EXACT CENTER OF TILE UNLESS SPECIFICALLY APPROVED OTHERWISE BY THE ARCHITECT.
5. REFER TO ARCHITECTURAL REFLECTED CEILING PLANS FOR CEILING HEIGHTS AND CEILING MATERIALS AND LAYOUTS. REFER TO THE RESPECTIVE PLUMBING, HVAC AND ELECTRICAL DRAWINGS FOR LIGHTING, DIFFUSER AND REGISTER LAYOUTS IN CEILINGS AND FOR PIPING, DUCTWORK AND EQUIPMENT ABOVE CEILINGS FOR COORDINATION PURPOSES. IN THE EVENT OF CONFLICT OR IF DIMENSIONS ARE NOT SHOWN, OBTAIN FIELD DIRECTIVE FROM THE ARCHITECT AS TO THE LOCATIONS OF ALL VISIBLE EQUIPMENT.
6. ATTENTION IS CALLED TO THE REQUIREMENT FOR THE PREPARATION OF COORDINATION DRAWINGS. IN ADDITION TO THE PREPARATION OF SHOP DRAWINGS ALSO PREPARE COORDINATION DRAWINGS AS OUTLINED IN THE SPECIFICATION. THE APPROVAL OF THE SHOP DRAWINGS INCLUDING DIMENSIONS SHOWN THEREIN DOES NOT RELIEVE THE CONTRACTOR.
7. SPECIFIC ATTENTION IS DIRECTED TO THE REQUIREMENTS OF STATE BUILDING CODE AND NFPA 241-2004 REGARDING THE MAINTENANCE OF FIRE PROTECTION SYSTEMS INCLUDING STANDPIPES AND BULK FIRE MAINS BOTH DURING CONSTRUCTION. MAINTAIN THE SYSTEMS AS REQUIRED BY THESE STANDARDS AS A MINIMUM.
8. THE SPRINKLER CONTRACTOR SHALL PROVIDE AS PART OF HIS CONTRACT AN INSPECTOR'S TEST STATION ON EACH SPRINKLER ZONE. THE INSPECTOR'S TEST STATION WILL BE LOCATED AT THE MOST HYDRAULICALLY REMOTE PART OF EACH ZONE AND SHALL BE IDENTIFIED ON THE SPRINKLER SHOP DRAWINGS.
9. REFER TO NFPA 13 TABLE 8.3.2.5(a) FOR TEMPERATURE RATING OF SPRINKLERS BASED ON DISTANCE FROM HEAT SOURCES SUCH AS HEATING DUCTS, DIFFUSERS AND UNIT HEATERS.

FIRE PROTECTION CRITERIA

1. THE PURPOSE OF THE FIRE PROTECTION DRAWINGS AND SPECIFICATIONS IS TO ESTABLISH THE CRITERIA FOR DESIGN, MATERIALS, AND LOCATIONS OF THE COMPLETE SPRINKLER SYSTEM. THE FIRE PROTECTION SUB-CONTRACTOR IS RESPONSIBLE FOR THE FINAL DESIGN OF THE SPRINKLER SYSTEM AND SAID DESIGN AND INSTALLATION SHALL INCLUDE ALL COMPONENTS TO PROVIDE FOR THE COMPLETE SYSTEM WITHOUT ANY ADDITIONAL EXPENSE TO THE OWNER. THE SUB-CONTRACTOR SHALL VERIFY THAT THE NUMBER OF HEADS SHOWN ON HIS WORKING PLANS AND HYDRAULIC CALCULATIONS ARE ADEQUATE TO PROTECT ALL AREAS OF THE BUILDING AND SHALL INCLUDE ANY COST FOR ADDITIONAL SPRINKLER HEADS AND PIPING NOT SHOWN ON THESE DRAWINGS IN HIS CONTRACT PRICE.
2. THE BUILDING IS TO BE 100% SPRINKLERED INCLUDING ALL CLOSETS, TELEPHONE ROOMS, AND ELECTRIC ROOMS. THE EMERGENCY ELECTRIC ROOM SHALL BE CONSTRUCTED AND OCCUPIED TO MEET THE EXCEPTIONS LISTED UNDER NFPA 13-2013 PARAGRAPH 8.15.11 AND ARE NOT SPRINKLERED. THE ELEVATOR MACHINE ROOM AND ELEVATOR SHAFT ARE NOT SPRINKLERED.
3. THE BUILDING IS GENERALLY WOOD CONSTRUCTION. THE SPACE SHALL BE PROTECTED THROUGHOUT WITH A WET TYPE SPRINKLER SYSTEM AND THE HEADS LOCATED WHERE SHOWN.
4. CODE REQUIREMENTS:

   BUILDING USE: A-3: ASSEMBLY

   FLOOR AREA:
   BASEMENT = 5,147 S.F.
   GROUND FLOOR = 9,206 S.F.
   SECOND FLOOR = 2,923 S.F.
   TOTAL = 17,276 S.F.

   CONSTRUCTION: 5B

   PER 780 CMR - 903.2 - SPRINKLERS ARE REQUIRED IN USE GROUP B, 12,000 S.F.

   MGL-C148-S26G - REQUIRES SPRINKLERS IN COMMERCIAL USE BUILDING GREATER THAN 7,500 S.F.

   SYSTEM DESIGN PROVIDES FOR AN AUTOMATIC SPRINKLER SYSTEM DESIGNED AND INSTALLED IN ACCORDANCE WITH NFPA 13-2013.

   REFER TO ARCHITECT'S DRAWINGS FOR ADDITIONAL CODE SUMMARY INFORMATION AND DELINEATION OF FIRE SEPARATIONS.

   REFER TO ELECTRICAL DRAWINGS FOR DETAILS OF THE FIRE ALARM SYSTEM.
5. PROVIDE COMPLETE HYDRAULIC CALCULATIONS AND DISTRIBUTION SYSTEM DESIGN UTILIZING THE DESIGN CRITERIA ESTABLISHED ON THE CONTRACT DOCUMENTS. SYSTEM DESIGN SHALL BE BASED ON FLOW TEST PROVIDED HEREIN. THE TEST WAS CONDUCTED AT ON OCTOBER 5, 2017 BY FIRE PROTECTION SERVICES. FLOW HYDRANT IS LOCATED HUBBARD STREET. GAGE HYDRANT LOCATED AT STOW STREET. ELEVATION OF THE GAGE HYDRANT IS APPROXIMATELY 131.

   STATIC PRESSURE = 95 PSI
   RESIDUAL PRESSURE 92 PSI
   FLOW = 869 GPM
6. REQUIRED DESIGN FLOWS:

   A. DESIGN HAZARDS:
   1. MECHANICAL ROOMS = ORDINARY, GROUP 1
   2. STORAGE ROOMS = ORDINARY, GROUP 1
   3. OFFICES = LIGHT
   4. MEETING ROOMS = LIGHT
   5. ALL OTHER AREAS NOT LISTED = LIGHT

   B. REQUIRED DESIGN DENSITIES:
   1. LIGHT HAZARD AREAS = 0.10 GPM OVER 1,500 S.F.
   2. ORDINARY HAZARD GROUP 1 = 0.15 GPM OVER 1,500 S.F.
   3. ORDINARY HAZARD GROUP 2 = 0.20 GPM OVER 1,500 S.F.
7. SPRINKLER SPACING (MAX.):

   LIGHT HAZARD AREAS = 225 S.F.
   ORDINARY HAZARD AREAS = 130 S.F.
8. PRELIMINARY CALCULATIONS ONLY. THESE ARE BASED ON THE INFORMATION ABOVE FOR THE DESIGNER'S PURPOSES ONLY AND TO ESTABLISH THE SYSTEM PERFORMANCE IN ACCORDANCE WITH 903.1. NO ADDITIONAL COMPENSATION WILL BE ALLOWED FOR ANY DEVIATION.

   ANALYSIS OF ORDINARY HAZARD AREA (SALLYPORT):

   SPRINKLER FLOW:
   MIN. FLOW = 0.10 GPM/S.F. x 1,500 =150 GPM
   HYDRAULIC FACTOR = 1.5
   SPRINKLER FLOW = 225 GPM
   ELEVATION = 153'
   INSIDE HOSE = 100 GPM
   OUTSIDE HOSE = 150 GPM
   TOTAL HOSE = 250 GPM
   TOTAL FLOW = 475 GPM

   MINIMUM PRESSURE @ SPRINKLER HEAD:
   (ASSUME K = 5.6) = 7 PSI
   PRESSURE AVAILABLE @ 475 GPM @ EL 131' = 92 PSI
   GRAVITY LOSS = (131 - 153) x .433 = 9.5 PSI
   D.C.V.A. = 5 PSI
   DESIGN CUSHION = 10 PSI
   AVAILABLE FOR PIPING LOSS (92 - 32) = 60 PSI

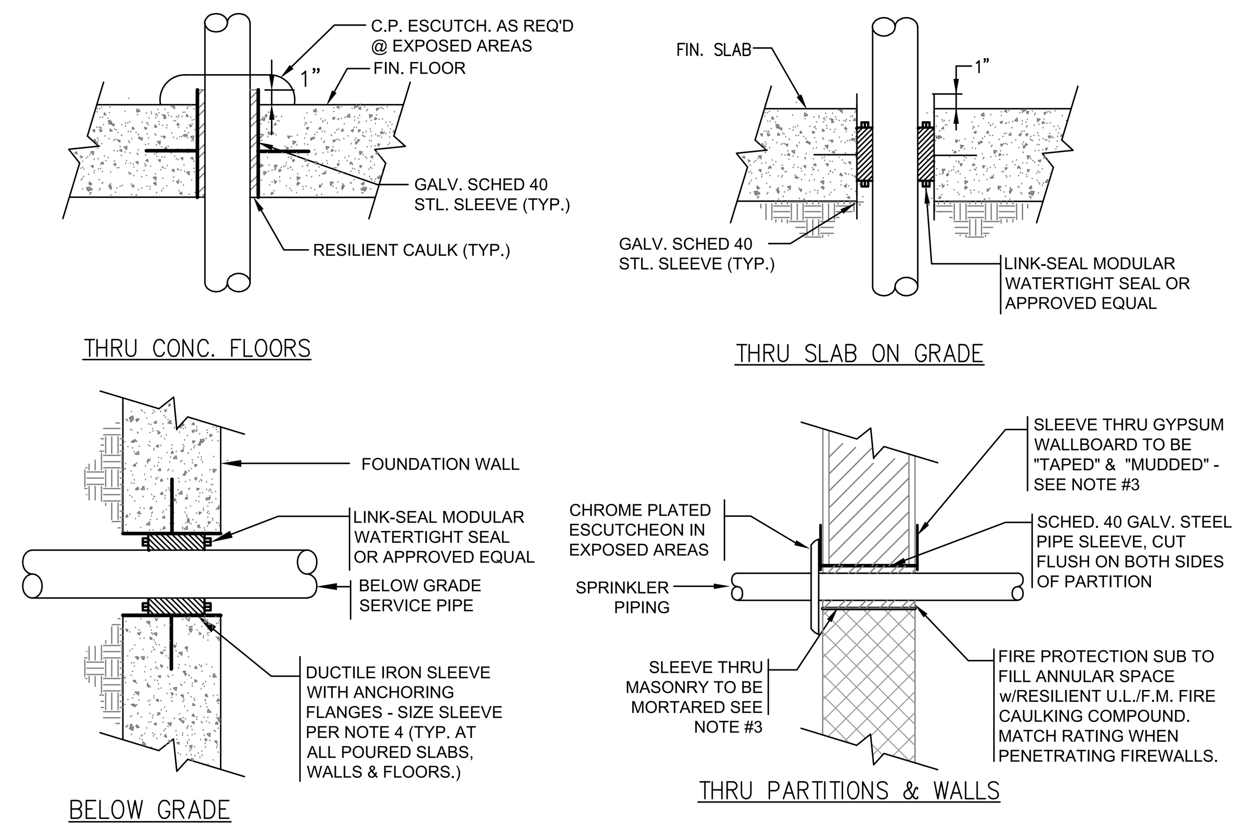

1 / FP5.0 TYPICAL SLEEVE CONDITION DETAILS
N.T.S.

NOTE:
1. ALL PIPING PENETRATING ALL PARTITIONS, WHETHER FIRE OR SMOKE RATED OR NOT, CONCEALED OR EXPOSED, SHALL BE SLEEVED AS DETAILED.
2. WHERE CONCRETE WALLS, SLABS, ETC., ARE CORE DRILLED, INSTALL SLEEVE FLUSH WITH BOTH SIDES, CAULKED & LEADED IN PLACE.
3. REFER TO DIVISION 4 & 9 FOR PROCEDURES & METHODS OF PATCHING AROUND SLEEVES AT GYPSUM, PLASTER & MASONRY. REFER TO SPECS FOR DELINEATION OF RESPONSIBILITY. SLEEVES SHALL BE SIZED TO PROVIDE MIN. 1" CLEARANCE BETWEEN PIPE O.D. & SLEEVE I.D.
4. FOR PIPING UP TO 3" IN SIZE. PROVIDE 2" CLEARANCE BETWEEN PIPE O.D. & SLEEVE I.D. FOR PIPING 4" IN SIZE AND GREATER.

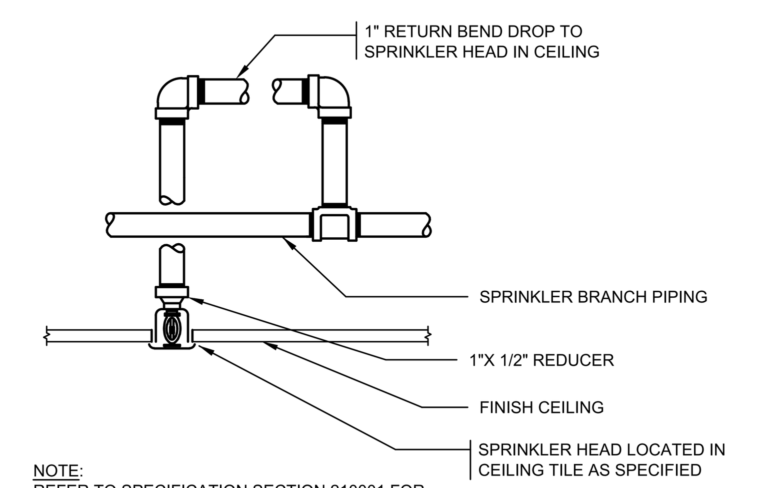

NOTE:
REFER TO SPECIFICATION SECTION 210001 FOR SPRINKLER HEAD TYPES AND LOCATION REQUIREMENTS WITHIN CEILING TILES.

2 / FP5.0 TYPICAL CONCEALED SPRINKLER HEAD RETURN BEND DROP
N.T.S.

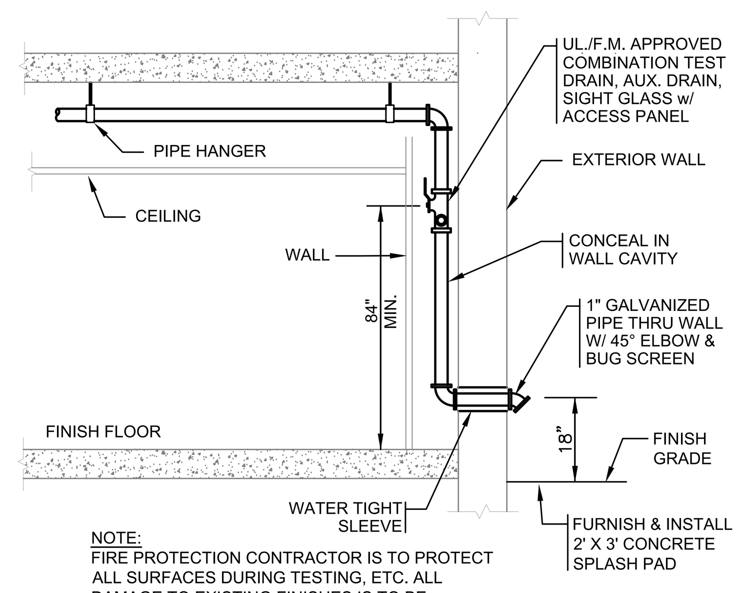

NOTE:
FIRE PROTECTION CONTRACTOR IS TO PROTECT ALL SURFACES DURING TESTING, ETC. ALL DAMAGE TO EXISTING FINISHES IS TO BE REPAIRED AT NO ADDITIONAL COST TO OWNER.

3 / FP5.0 INSPECTOR'S TEST STATION PIPING SCHEMATIC - WET SYSTEM
N.T.S.

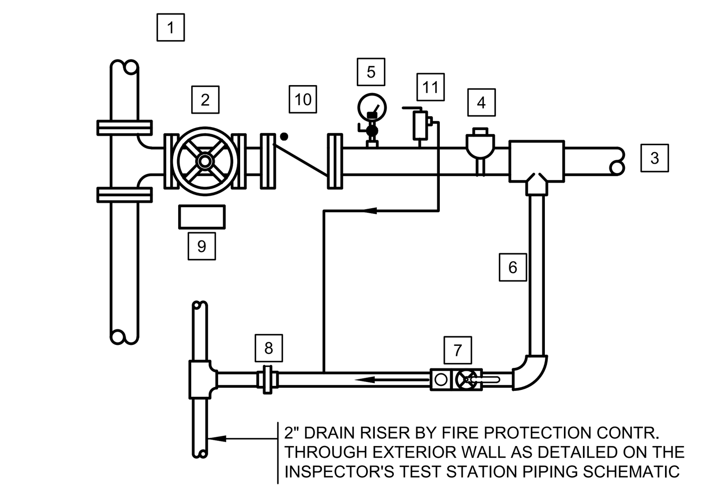

1. COMBINATION F/SP. STANDPIPE
2. UL/FM INDICATING TYPE CONTROL VALVE
3. TO SPRINKLER SYSTEM
4. WATERFLOW SWITCH
5. PRESSURE GAUGE WITH COCK
6. 1" DRAIN LINE
7. U.L. LISTED COMBINATION TEST DRAIN, AUX. DRAIN, AND SIGHT GLASS
8. UNION
9. IDENTIFICATION SIGN
10. UL/FM CHECK VALVE
11. 3/4" RELIEF VALVE PROVIDE ON ASSEMBLIES WITH PRESSURE REDUCING & CHECK VALVES

4 / FP5.0 SPRINKLER CONTROL VALVE DETAIL ASSEMBLY (SCVA) DETAIL
N.T.S.

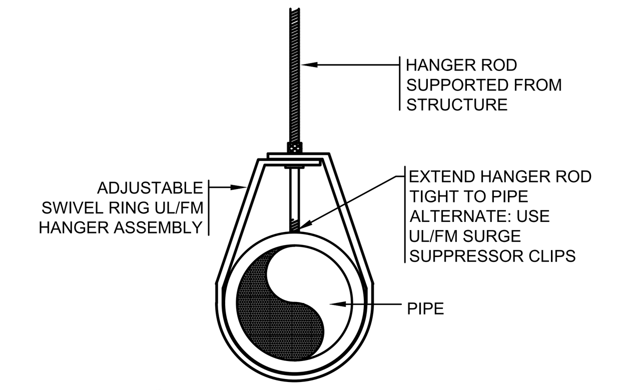

NOTE:
TO BE USED AT ALL END-OF-LINE BRANCH HANGERS THROUGHOUT PROJECT

5 / FP5.0 TYPICAL END-OF-LINE BRANCH PIPE HANGER DETAIL
N.T.S.

JOHNSON ROBERTS ASSOCIATES INC.
ARCHITECTS
15 PROPERZI WAY
SOMERVILLE, MA
01243 - 3228

GARCIA•GALUSKA•DESOUSA
CONSULTING ENGINEERS INC.

Revisions:

CONCORD FREE PUBLIC LIBRARY EXPANSION

CONCORD, MA

Sheet Title: Legend, Schedules, and Details Plan

Date: 24-Oct-19 | Drawn By: RSN

Scale: 1/8"=1'-0" | Project No.: 1714

FP0.0

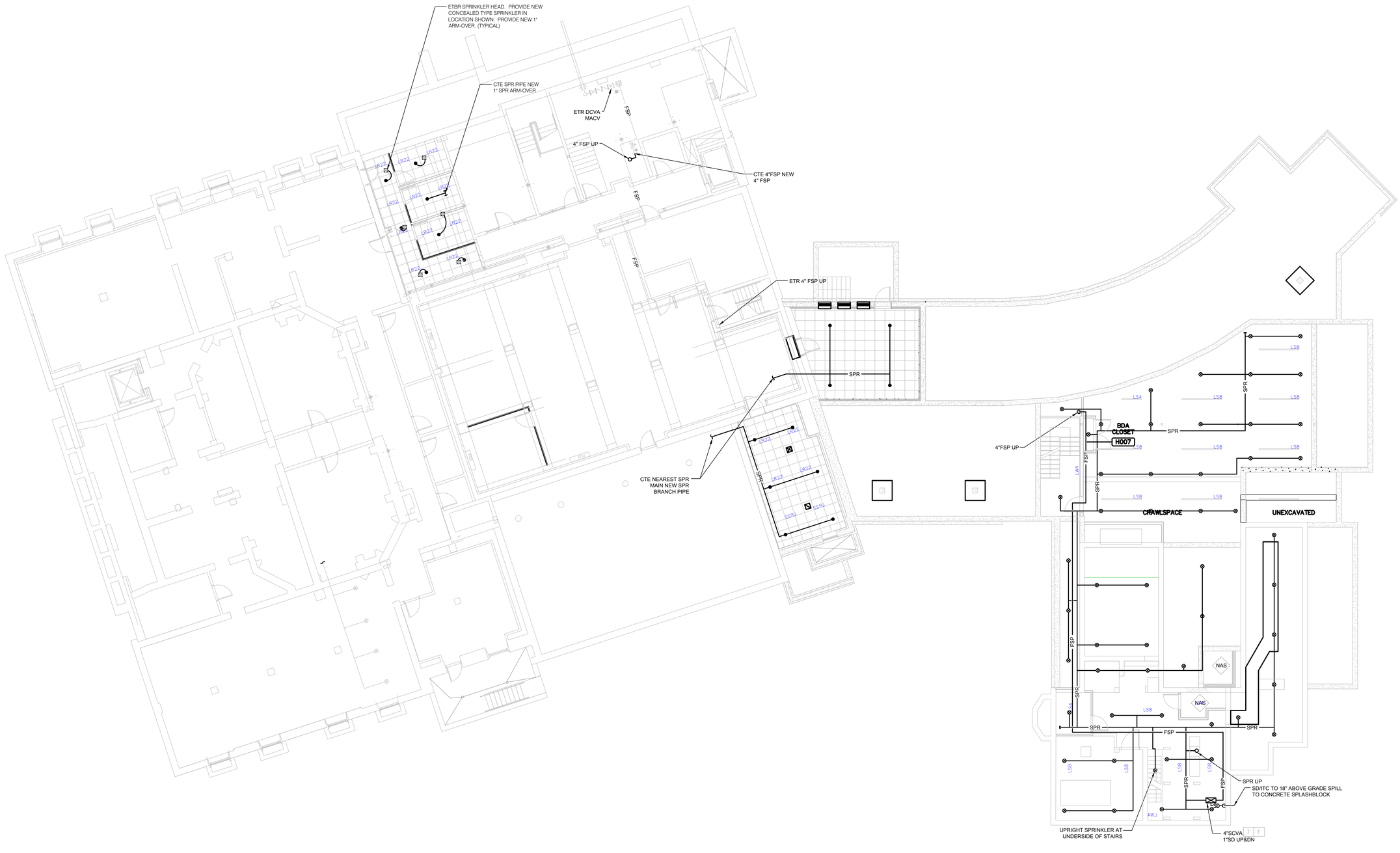

JOHNSON ROBERTS ASSOCIATES INC.
ARCHITECTS

15 PROPERZI WAY
SOMERVILLE, MA
01243 - 3228

GARCIA•GALUSKA•DESOUSA
CONSULTING ENGINEERS INC.
200 FRANKLIN CORNER ROAD, LAWRENCE, NJ. 08648-4317
609-896-0700 • FAX 609-896-0800 • E-MAIL info@g-g-d.com

Revisions:

CONCORD FREE PUBLIC LIBRARY EXPANSION

CONCORD, MA

Sheet Title:

Basement Fire Protection Plan

Date: 24-Oct-19 Drawn By: RSN

Scale: 1/8"=1'-0" Project No.: 1714

FP1.0

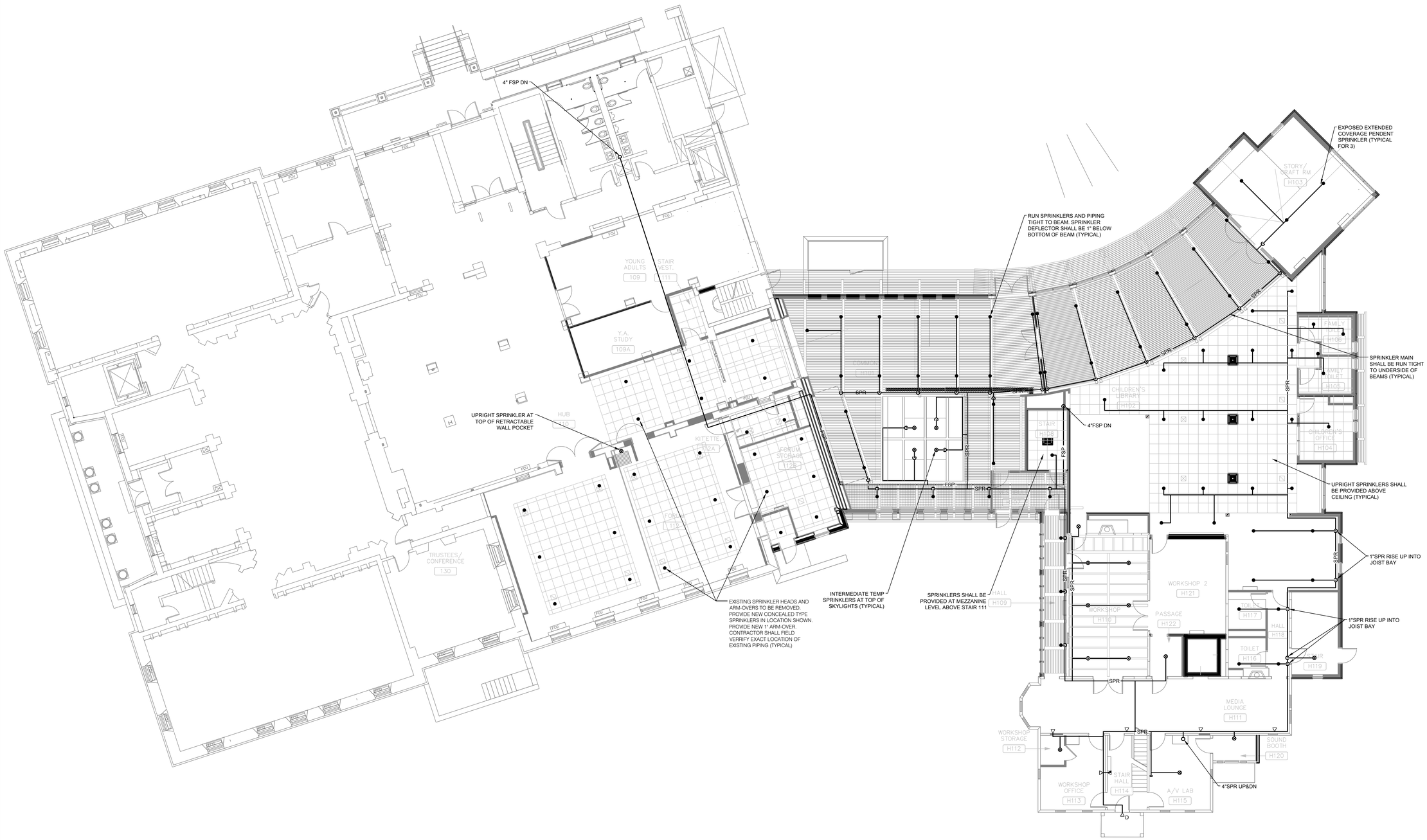

JOHNSON ROBERTS ASSOCIATES INC.
ARCHITECTS

15 PROPERZI WAY
SOMERVILLE, MA
01243 - 3228

GARCIA•GALUSKA•DESOUSA
CONSULTING ENGINEERS INC.
200 FRANKLIN CORNER ROAD, LEXINGTON, MA 02421-1017
617-863-5700 • FAX 617-863-5800 • E-MAIL info@g-g-d.com

Revisions:

CONCORD FREE PUBLIC LIBRARY EXPANSION

CONCORD, MA

Sheet Title:

Ground Floor Fire Protection Plan

Date: 24-Oct-19 Drawn By: RSN

Scale: 1/8"=1'-0" Project No.: 1714

FP1.1

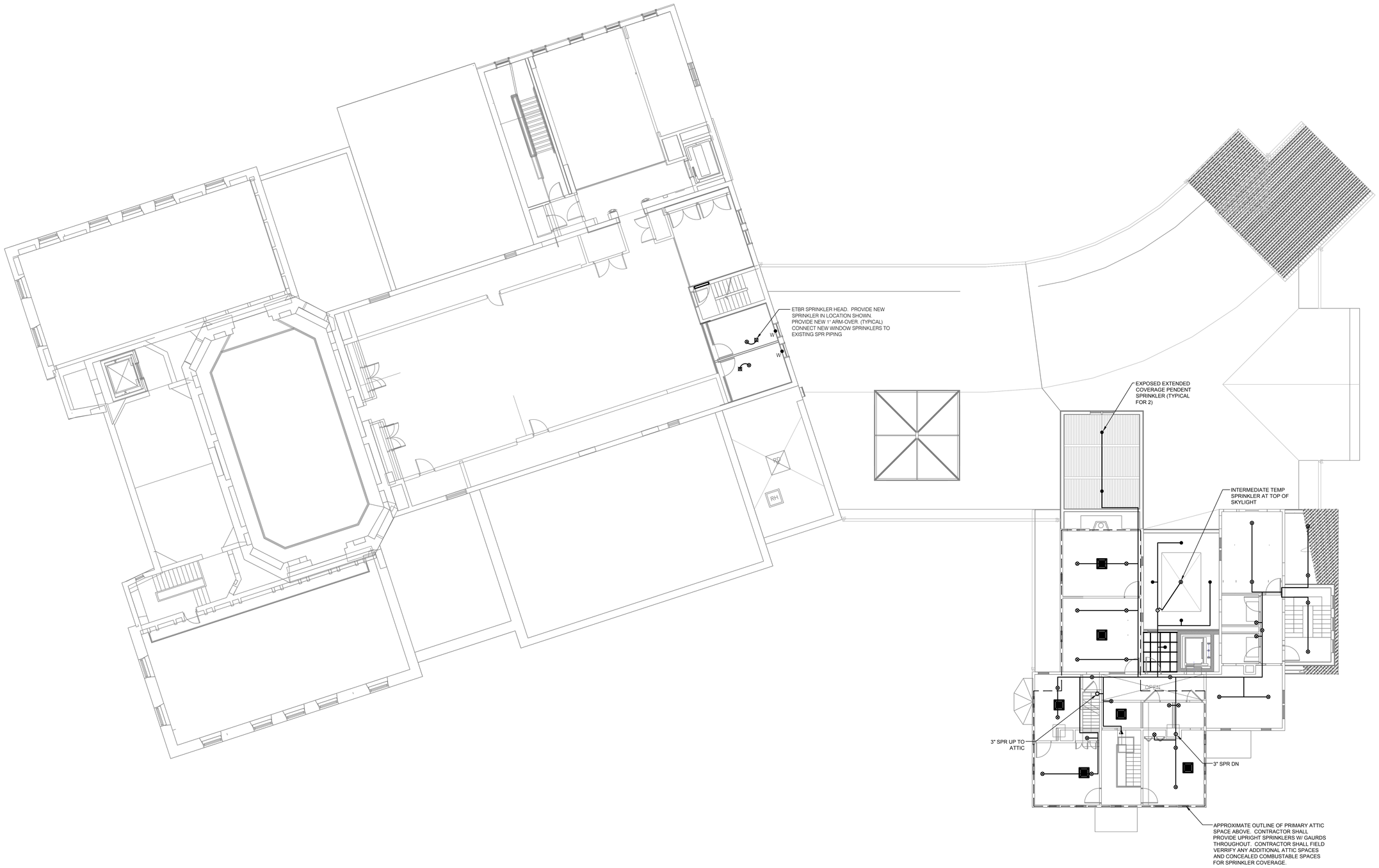

JOHNSON ROBERTS ASSOCIATES INC.
ARCHITECTS

15 PROPERZI WAY
SOMERVILLE, MA
01243 - 3228

GARCIA•GALUSKA•DESOUSA
CONSULTING ENGINEERS INC.
270 FRANKLIN CORNER ROAD, LEXINGTON, MA 02421-1017
781-863-5700 • FAX 781-863-0020 • E-MAIL info@g-g-d.com

Revisions:

CONCORD FREE PUBLIC LIBRARY EXPANSION

CONCORD, MA

Sheet Title:

Second Floor Fire Protection Plan

Date: 24-Oct-19 Drawn By: RSN

Scale: 1/8"=1'-0" Project No.: 1714

FP1.2

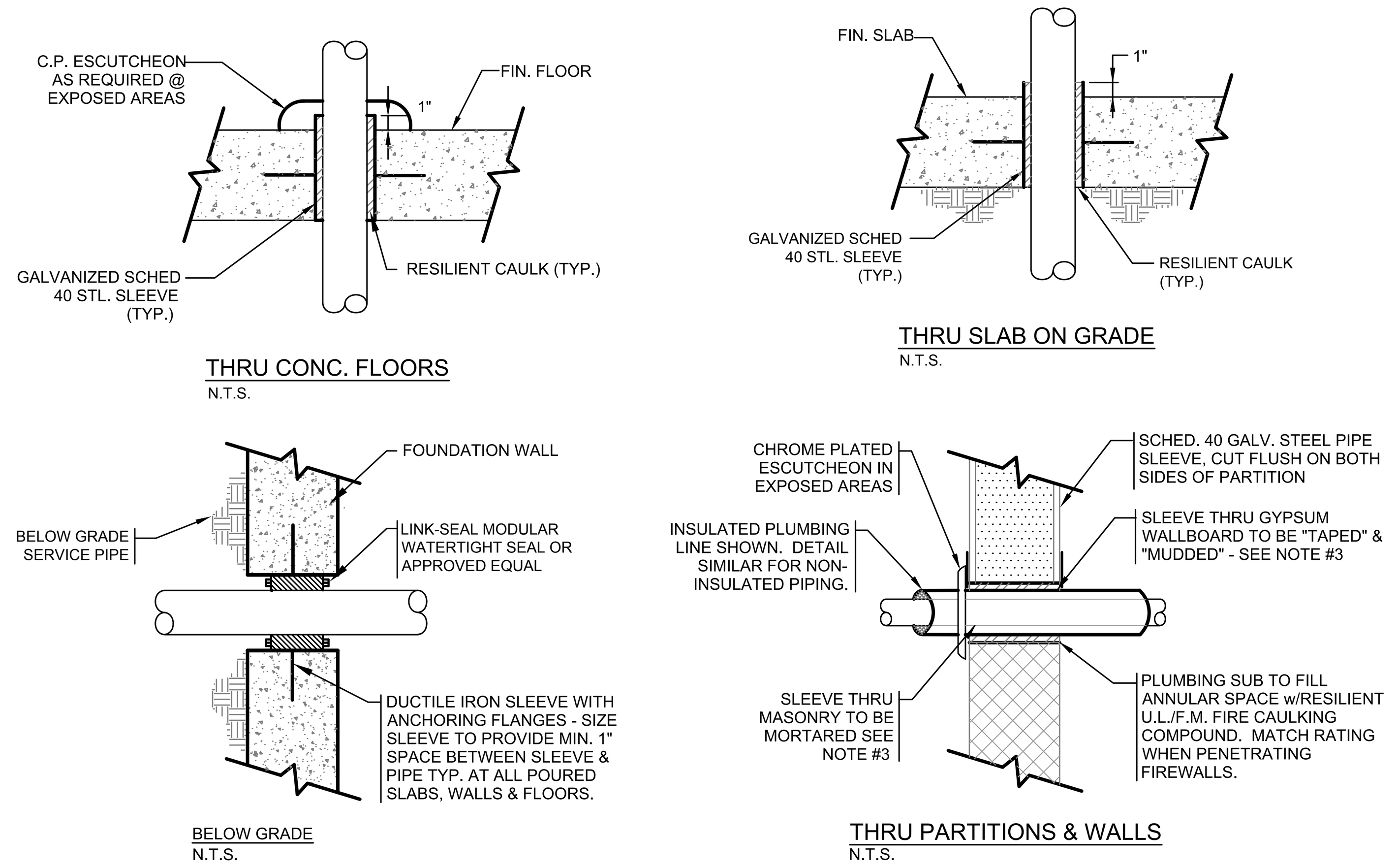

1/P0.1 TYPICAL PLUMBING SLEEVE CONDITION DETAILS
N.T.S.

NOTE:
1. ALL PIPING PENETRATING ALL PARTITIONS, WHETHER FIRE OR SMOKE RATED OR NOT, CONCEALED OR EXPOSED, SHALL BE SLEEVED AS DETAILED.
2. WHERE CONC. WALLS, SLABS, ETC., ARE CORE DRILLED, INSTALL SLEEVE FLUSH WITH BOTH SIDES, CAULKED & LEADED IN PLACE.
3. REFER TO DIVISION 4 & 9 FOR PROCEDURES & METHODS OF PATCHING AROUND SLEEVES AT GYPSUM, PLASTER & MASONRY. REFER TO SPECS FOR DELINEATION OF RESPONSIBILITY
4. SLEEVES SHALL BE SIZED TO PROVIDE MIN. 1" CLEARANCE BETWEEN PIPE O.D. & SLEEVE I.D.

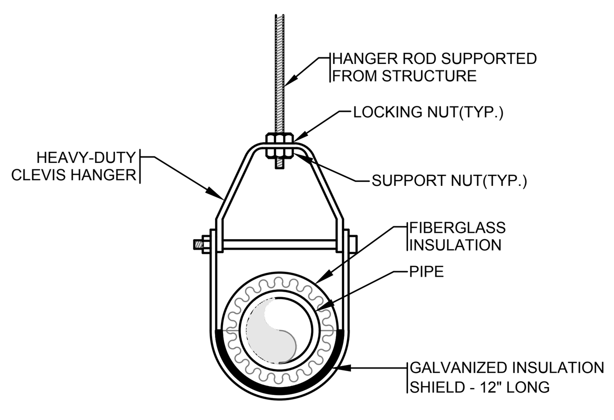

2/P0.1 TYPICAL PIPE HANGER DETAIL
N.T.S.

THIS DETAIL INDICATES HANGING OF INSULATED PIPING WHICH MAY BE EITHER WATER OR STORM DRAIN. CLEVIS HANGER DETAIL APPLIES TO ALL PLUMBING PIPING ON THIS PROJECT.

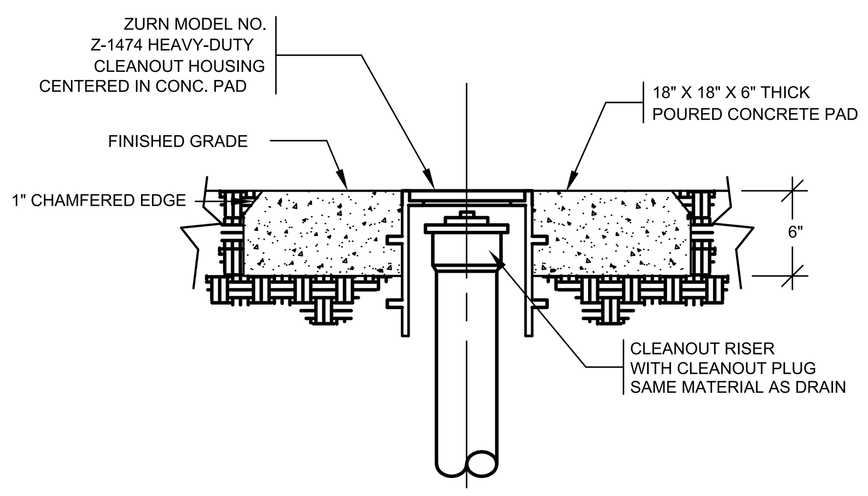

3/P0.1 GROUND CLEANOUT
N.T.S.

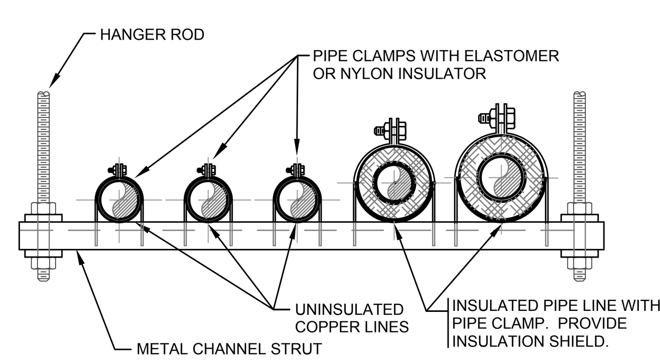

4/P0.1 TRAPEZE PIPE HANGER
N.T.S.

SHOCK ABSORBER SCHEDULE

PDI SYMBOL	A	B	C	D	E	F
ZURN SERIES 1250-XL OR EQ.	A	B	C	D	E	F
FIXTURE UNITS	1-11	12-32	33-60	61-113	114-154	155-330

PLUMBING ELECTRICAL EQUIPMENT

UNIT NO.	UNIT FUNCTION	UNIT LOCATION	MOTOR HP	V	PH	KW	REMARKS
EWH-1	ELECT. WTR. HEATER	KITCHEN 112A	-	208	1	8.3	
EWH-2	EXISTING WTR. HEATER	MECHANICAL ROOM H004	-	208	1	3.5	
RP-1	CIRC. 120 HWR	MECHANICAL ROOM H004	-	120	1	-	TIME CLOCK 1 & AQUASTAT
ST-1	STORM WATER PUMPS	STORAGE ROOM H001	¾	208	3	-	DUPLEX
ESP-1	ELEVATOR SUMP PUMP	ELEVATOR PIT	½	120	1	-	

PIPE SIZE TO FIXTURE SCHEDULE

P. NO.	FIXTURE	S/W	VENT	CW	HW	REMARKS
P-1A	WATER CLOSET (ACCESSIBLE)	4"	2"	1"	-	FLOOR MOUNT - FLUSH VALVE
P-1B	WATER CLOSET (ACCESSIBLE)	4"	2"	1"	-	WALL MOUNT - FLUSH VALVE
P-2	LAVATORY (ACCESSIBLE)	2"	2"	1/2"	1/2"	WALL MOUNTED
P-3	SINK	2"	2"	1/2"	1/2"	W/ INTERCEPTOR
P-3A	SINK (ACCESSIBLE)	2"	2"	1/2"	1/2"	W/ INTERCEPTOR
P-4	JANITORS SINK	2"	2"	3/4"	3/4"	
P-5	SINK	2"	2"	1/2"	1/2"	
P-6	WATER FOUNTIAN	2"	2"	1/2"	-	

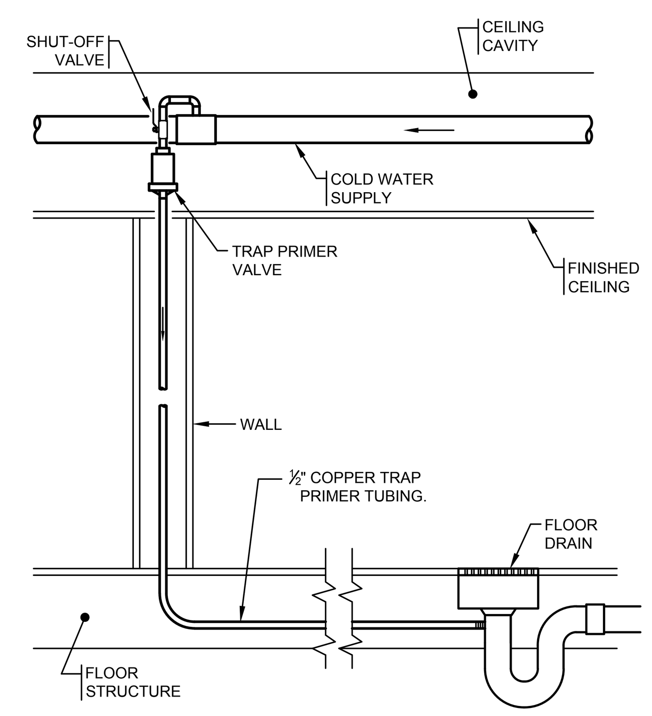

5/P0.1 TRAP PRIMER PIPING DETAIL
N.T.S.

LEGEND

ABBREV	DESCRIPTION
NEW	NEW WORK (DARK)
EX	EXISTING WORK (LIGHT)
S/W	SOIL/WASTE ABV. GRADE
S/W	SOIL/WASTE UNDERGROUND
V	VENT ABV. GRADE
V	VENT UNDERGROUND
IW	INDIRECT WASTE
RL	RAIN LEADER ABV. GRADE
RL	RAIN LEADER UNDERGROUND
CW	COLD WATER
HW	HOT WATER
HWR	HOT WATER RETURN
DP,DN	PIPE DROP OR DOWN
UP	PIPE RISE OR UP
	TEE LOOKING DOWN
	CAP ON END OF PIPE
FD RD AD	FLOOR DRAIN, ROOF DRAIN, AREA DRAIN
	STRAINER
	UNION
CO	CLEANOUT
DCO	DANDY CLEANOUT
FCO/ GCO	FLOOR CLEANOUT/ GRADE CLEAN OUT
PG/TG	PRESSURE GAGE/TEMPERATURE GAGE
SA △	SHOCK ABSORBER
	BALANCING VALVE
BV	BALL VALVE
CV	CHECK VALVE
	SOLENOID VALVE
GV	GATE VALVE
PRV	PRESSURE REDUCING VALVE
VOV	VALVE ON VERTICAL
PT	P-TRAP
S&W	STOP & WASTE VALVE
EL	EXPANSION LOOP
	PIPE GUIDE
	PIPE ANCHOR
	FLOW IN DIRECTION OF ARROW
HB/WH	HOSE BIBB/WALL HYDRANT
TP	TRAP PRIMER
TYP.	TYPICAL
FFE	FINISHED FLOOR ELEVATION
INV	INVERT ELEVATION
VTR	VENT THRU ROOF
AP	ACCESS PANEL
AFF	ABOVE FINISHED FLOOR
CI	CAST IRON
CP	CHROME PLATED
PC	PLUMBING CONTRACTOR
EC	ELECTRICAL CONTRACTOR
FPC	FIRE PROTECTION CONTRACTOR
GC	GENERAL CONTRACTOR
HVAC	HEAT, VENT & AIR COND. CONTRACTOR
DCVA	DOUBLE CHECK VALVE ASSEMBLY
RPBP	REDUCED PRESSURE BACKFLOW PREVENTOR
FBO	FURNISHED BY OTHERS
S&W	STOP AND WASTE

NOTE: NOT ALL SYMBOLS LISTED ARE APPLICABLE TO THIS PROJECT

GENERAL NOTES

1. THE PLUMBING DRAWINGS ARE DIAGRAMMATIC AND ARE TO BE USED FOR THE PURPOSE OF ESTABLISHING GENERAL LOCATIONS OF PIPING RUNS, SIZES OF PIPING, AND QUANTITIES OF FIXTURES AND EQUIPMENT TO BE FURNISHED HEREIN. REFER TO ARCHITECTURAL DRAWINGS FOR DIMENSIONS FOR EXACT LOCATIONS OF ALL PLUMBING FIXTURES, AND EQUIPMENT, INCLUDING FLOOR DRAINS, AND MOUNTING HEIGHTS. IN THE EVENT OF CONFLICT OR IF DIMENSIONS ARE NOT SHOWN, OBTAIN FIELD DIRECTIVE FROM THE ARCHITECT AS TO THE LOCATIONS OF ALL VISIBLE EQUIPMENT. PAY PARTICULAR CARE TO COORDINATE WITH THE ARCHITECT'S FIELD REPRESENTATIVE ALL FLOOR DRAIN AND FLOOR CLEANOUT LOCATIONS.
2. ALL PIPING SHOWN ON THIS PLAN SHALL BE RUN CONCEALED ABOVE SUSPENDED CEILINGS, IN CHASES, OR IN PARTITIONS UNLESS SPECIFICALLY NOTED OTHERWISE.
3. EXISTING CONDITIONS INDICATING PIPING AND EQUIPMENT LOCATIONS ARE TAKEN FROM ENGINEERING FIELD NOTES AND DRAWINGS OF THE ORIGINAL BUILDING CONSTRUCTION ARE TO BE CONSIDERED APPROXIMATE ONLY. FIELD VERIFY POINTS OF CONNECTIONS OF NEW TO EXISTING BEFORE INSTALLING ANY PIPE OR EQUIPMENT. BRING ANY DISCREPANCY TO THE ATTENTION OF THE ARCHITECT.
4. INSTALL ALL NEW VALVES SO AS TO BE EASILY ACCESSIBLE AND OPERABLE.
5. WHERE REMOVAL OF EXISTING FIXTURES, EQUIPMENT AND PIPING IS INDICATED CUT AND CAP ALL EXISTING PIPING TO BEYOND THE NEW FINISHED SURFACE SO NO EVIDENCE OF PREVIOUS INSTALLATION WILL REMAIN.
6. MAINTAIN PLUMBING SYSTEMS IN OTHER BUILDING AREAS AT ALL TIMES DURING THE CONSTRUCTION. REFER TO PHASING PLANS AND SPECIFICATIONS ON THE ARCHITECT'S DRAWINGS & SPECIFICATIONS.
7. THE PLUMBING DRAWINGS ARE INTENDED TO INDICATE THE SIZING AND DESIGN FOR THE MAIN SUPPLY AND WASTE PIPING AND FOCUSES ON RUNS AND SIZES OF THE MAIN RISERS, STACKS AND VENT TERMINATION. IT IS NOT INTENDED TO INDICATE EVERY TRAP AND FIXTURE CONNECTION. PARTICULARLY IN THE CASE OF GANG TOILETS. CONTRACTOR IS REQUIRED TO PROVIDE ALL CONNECTIONS, TO MAKE ALL CONNECTIONS TO ALL DRAINS AND FIXTURES WHICH ARE SHOWN AND SCHEDULED ON THE PLUMBING DRAWINGS.

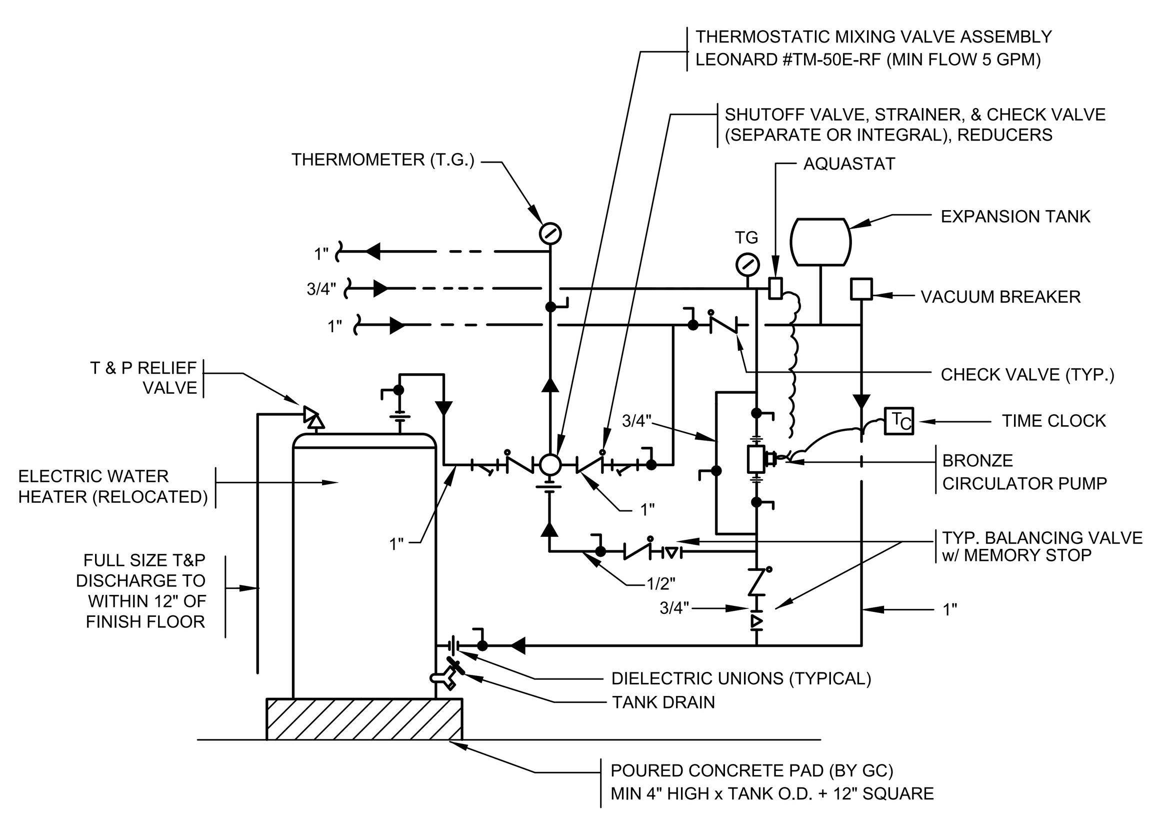

6/P0.1 WATER HEATER PIPING DETAIL
N.T.S.

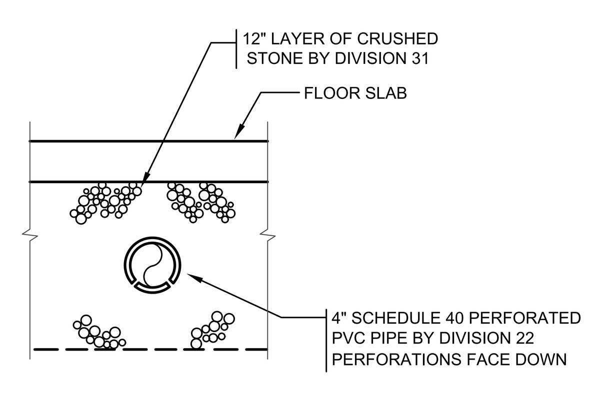

7/P0.1 SUB-SOIL DRAIN TRENCH SECTION
N.T.S.

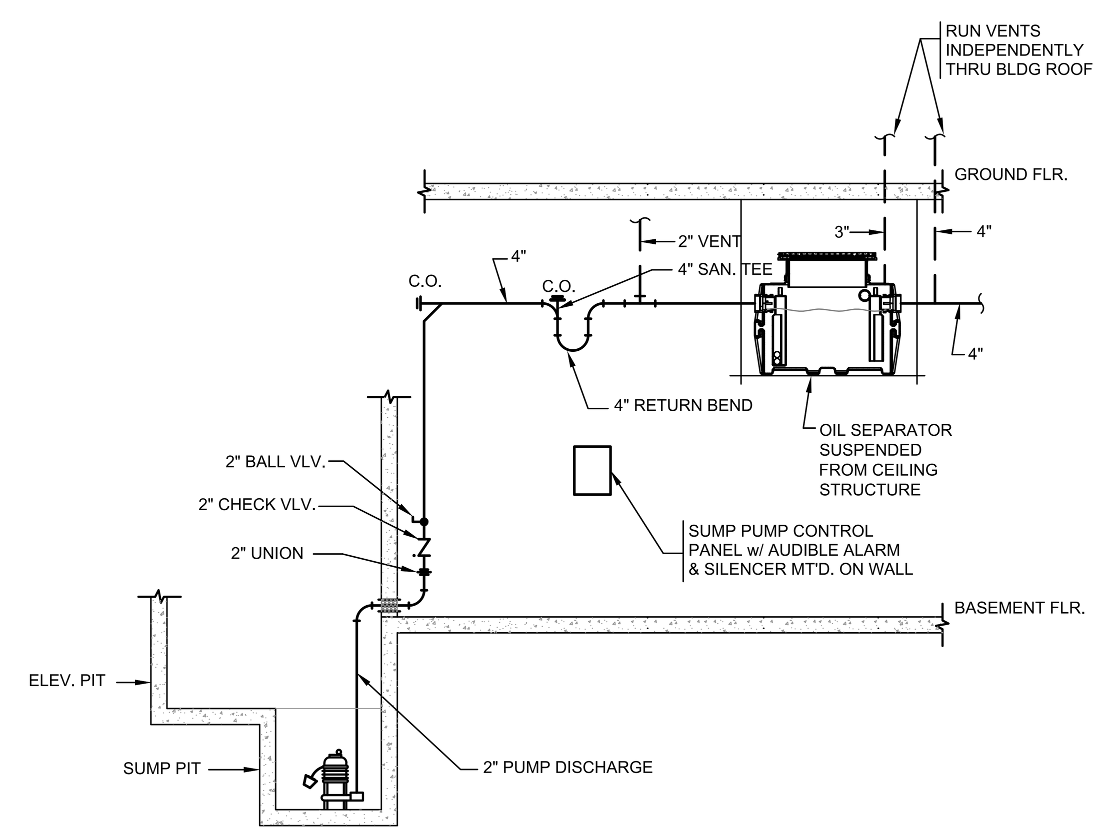

8/P0.1 DETAIL OF ELEVATOR SUMP PUMP HYDRAULIC ELEVATOR
N.T.S.

GENERAL DEMOLITION NOTES:

1. ALL EXISTING PLUMBING FIXTURES & EQUIPMENT THROUGHOUT BUILDING SHALL BE DEMOLISHED.
2. IT IS DESIGN INTENT TO DEMOLISH EXISTING WATER, WASTE, VENT AND GAS PIPING SYSTEMS THROUGHOUT BUILDING, IN ITS ENTIRETY.
3. REFER TO PHASING PLANS AND SPECIFICATIONS PRIOR TO ANY DEMOLITION WORK.
4. REFER TO SPECIFICATIONS FOR DEMOLITION RESPONSIBILITIES & DESCRIPTIONS. REFER TO GENERAL DEMOLITION NOTES ON ARCHITECTURAL DEMOLITION DRAWINGS.
5. EXISTING PIPING LOCATED UNDER EXISTING FLOOR SLABS MAY BE ABANDONED IN PLACE IF APPROVED BY THE GENERAL CONTRACTOR. EXISTING PIPING BELOW FLOOR SHALL CONSIST OF A CAULKED AND LEADED CAP OR CAPPED WITHIN 24" OF LIVE MAIN. CONCRETE FILLED PIPES ARE NOT ACCEPTABLE

JOHNSON ROBERTS ASSOCIATES INC.
ARCHITECTS
15 PROPERZI WAY
SOMERVILLE, MA
01243 - 3228

GARCIA•GALUSKA•DESOUSA
CONSULTING ENGINEERS INC.

Revisions:

CONCORD FREE PUBLIC LIBRARY EXPANSION
CONCORD, MA

Sheet Title:
Plumbing Legend, Schedules, and Details Plan

Date: 24-Oct-19 Drawn By: JIG
Scale: 1/8"=1'-0" Project No.: 1714

P0.1

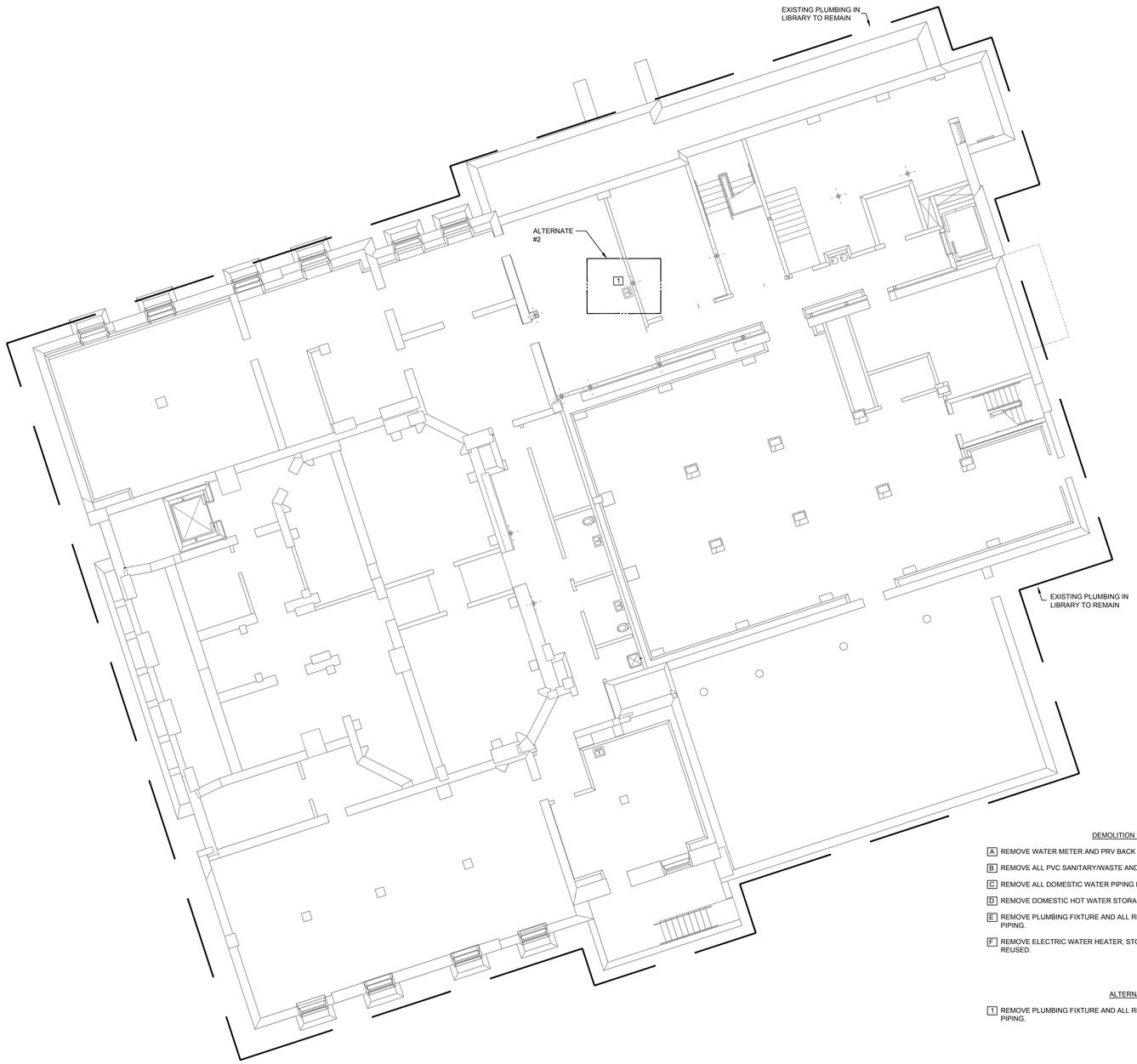

DEMOLITION KEY NOTES:

- A REMOVE WATER METER AND PRV BACK TO FOUNDATION AND CAP.
- B REMOVE ALL PVC SANITARY/WASTE AND VENT PIPING FROM THE BUILDING.
- C REMOVE ALL DOMESTIC WATER PIPING FROM THE BUILDING.
- D REMOVE DOMESTIC HOT WATER STORAGE TANK.
- E REMOVE PLUMBING FIXTURE AND ALL RELATED WASTE, VENT AND WATER PIPING.
- F REMOVE ELECTRIC WATER HEATER, STORE IN SAFE LOCATION TO BE REUSED.

ALTERNATE #2:

- 1 REMOVE PLUMBING FIXTURE AND ALL RELATED WASTE, VENT AND WATER PIPING.

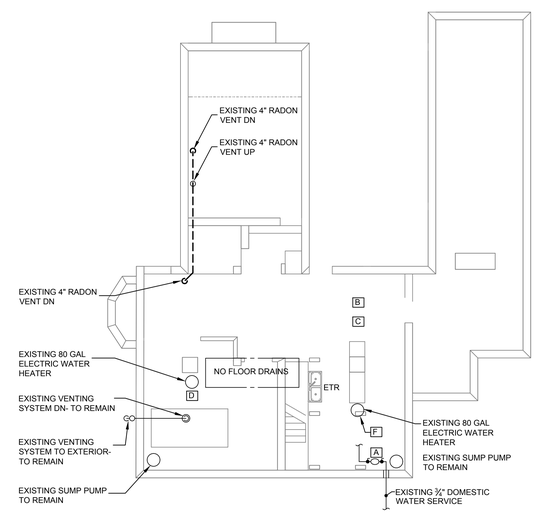

BASEMENT FLOOR PLAN - PLUMBING DEMOLITION

SCALE: 1/8" = 1'-0"

JOHNSON ROBERTS ASSOCIATES INC.

ARCHITECTS

15 PROPERZI WAY
SOMERVILLE, MA
01243 - 3228

GARCIA•GALUSKA•DESOUSA
CONSULTING ENGINEERS INC.
370 FRANKLIN CORNER ROAD, LAWRENCE, MA 08840-1217
978-683-2700 • FAX 978-683-2800 • E-MAIL info@g-g-d.com

Revisions:

CONCORD FREE PUBLIC LIBRARY EXPANSION

CONCORD, MA

Sheet Title:

Basement Demolition Plumbing Plan

Date: 24-Oct-19 Drawn By: JIG

Scale: 1/8"=1'-0" Project No.: 1714

P1.1

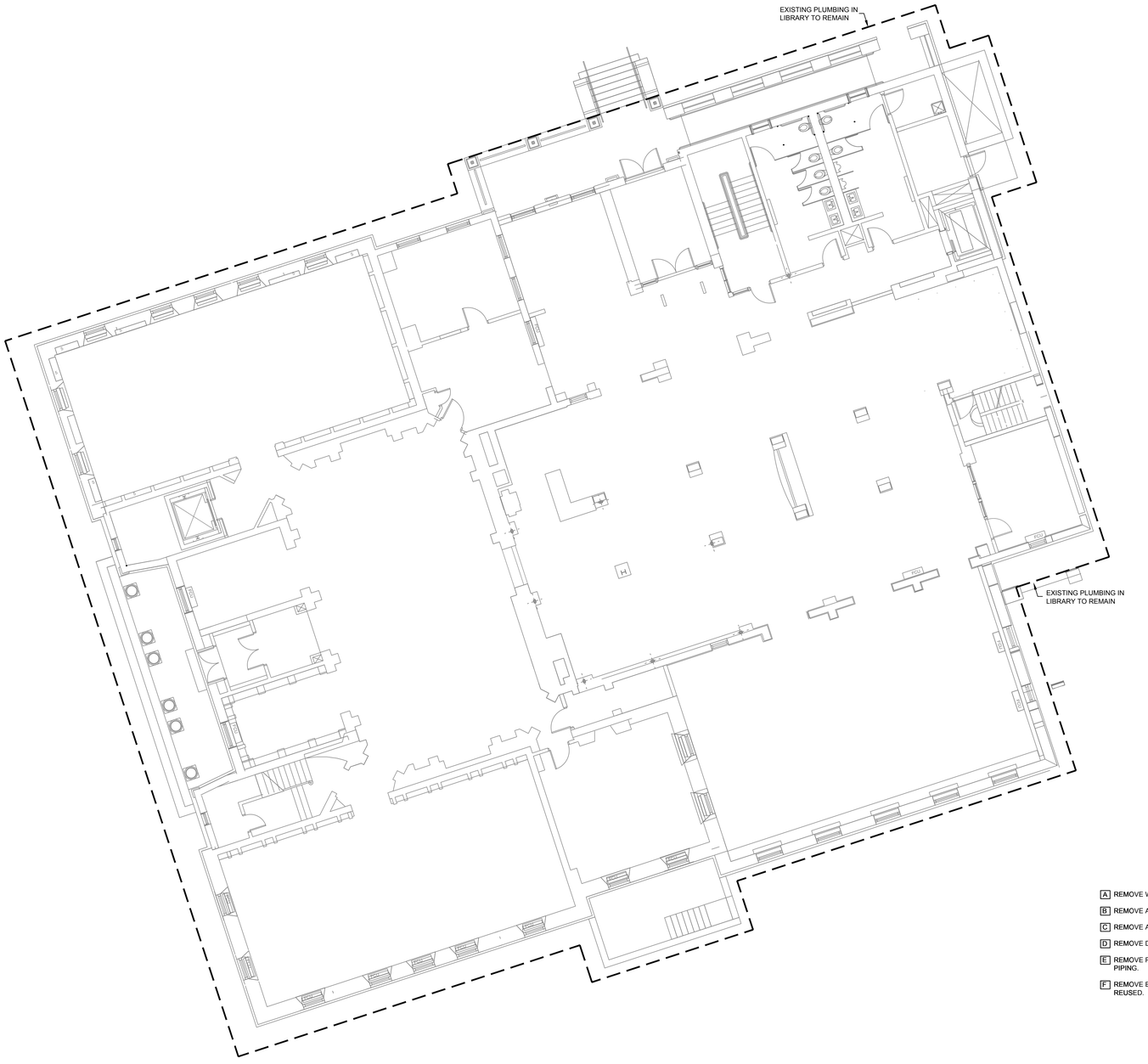

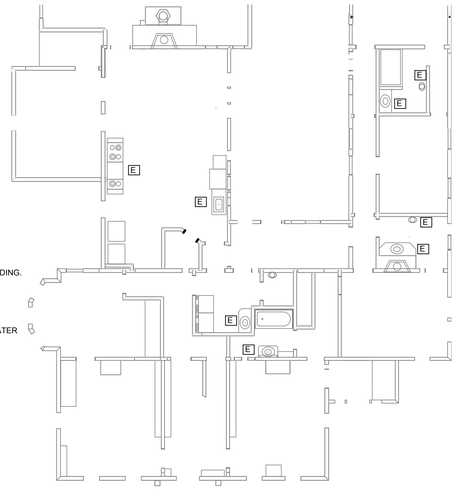

DEMOLITION KEY NOTES:

- A REMOVE WATER METER AND PRV BACK TO FOUNDATION AND CAP.
- B REMOVE ALL PVC SANITARY/WASTE AND VENT PIPING FROM THE BUILDING.
- C REMOVE ALL DOMESTIC WATER PIPING FROM THE BUILDING.
- D REMOVE DOMESTIC HOT WATER STORAGE TANK.
- E REMOVE PLUMBING FIXTURE AND ALL RELATED WASTE, VENT AND WATER PIPING.
- F REMOVE ELECTRIC WATER HEATER, STORE IN SAFE LOCATION TO BE REUSED.

GROUND FLOOR PLAN - PLUMBING DEMOLITION

SCALE: 1/8" = 1'-0"

JOHNSON ROBERTS ASSOCIATES INC.
ARCHITECTS

15 PROPERZI WAY
SOMERVILLE, MA
01243 - 3228

GARCIA•GALUSKA•DESOUSA
CONSULTING ENGINEERS INC.
370 FRANKLIN STREET BOSTON, MA 02107-1317
617-426-2700 • FAX: 617-426-2800 • E-MAIL: info@g-g-d.com

Revisions:

CONCORD FREE PUBLIC LIBRARY EXPANSION

CONCORD, MA

Sheet Title:

Ground Floor Demolition Plumbing Plan

Date: 24-Oct-19 Drawn By: JIG

Scale: 1/8"=1'-0" Project No.: 1714

P1.2

SECOND FLOOR PLAN - PLUMBING DEMOLITION

SCALE: 1/8" = 1'-0"

DEMOLITION NOTES:

1. REMOVE ALL PVC SANITARY/WASTE AND VENT PIPING FROM THIS LEVEL.
2. REMOVE ALL DOMESTIC WATER PIPING FROM THIS LEVEL.
3. REMOVE PLUMBING FIXTURES AND ALL RELATED WASTE, VENT AND WATER PIPING.

DEMOLITION KEY NOTES:

E REMOVE PLUMBING FIXTURE AND ALL RELATED WASTE, VENT AND WATER PIPING.

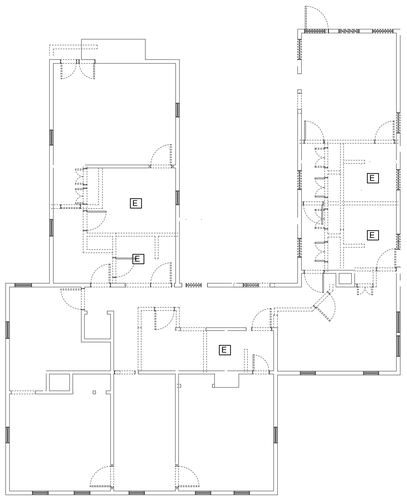

JOHNSON ROBERTS ASSOCIATES INC.
ARCHITECTS

15 PROPERZI WAY
SOMERVILLE, MA
01243 - 3228

GARCIA-GALUSKA-DESOUSA
CONSULTING ENGINEERS INC.
370 FRANKLIN CORNER ROAD, LAWRENCE, MA 01843-1037
978-683-0700 • FAX 978-683-0800 • E-MAIL info@g-g-d.com

Revisions:

CONCORD FREE PUBLIC LIBRARY EXPANSION

CONCORD, MA

Sheet Title:

Second Floor Demolition Plumbing Plan

Date: 24-Oct-19 Drawn By: EPL

Scale: 1/8"=1'-0" Project No.: 1714

P1.3

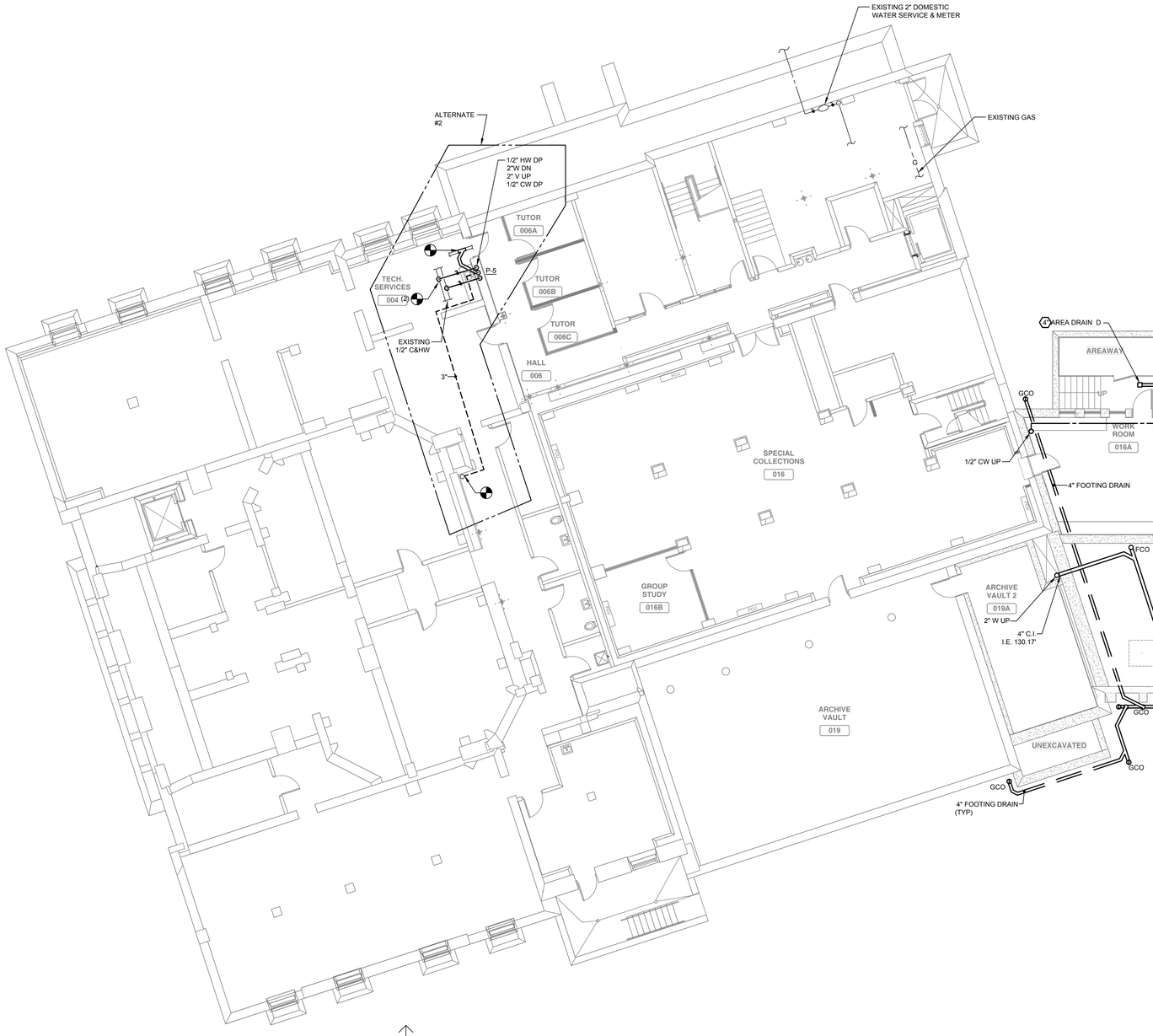

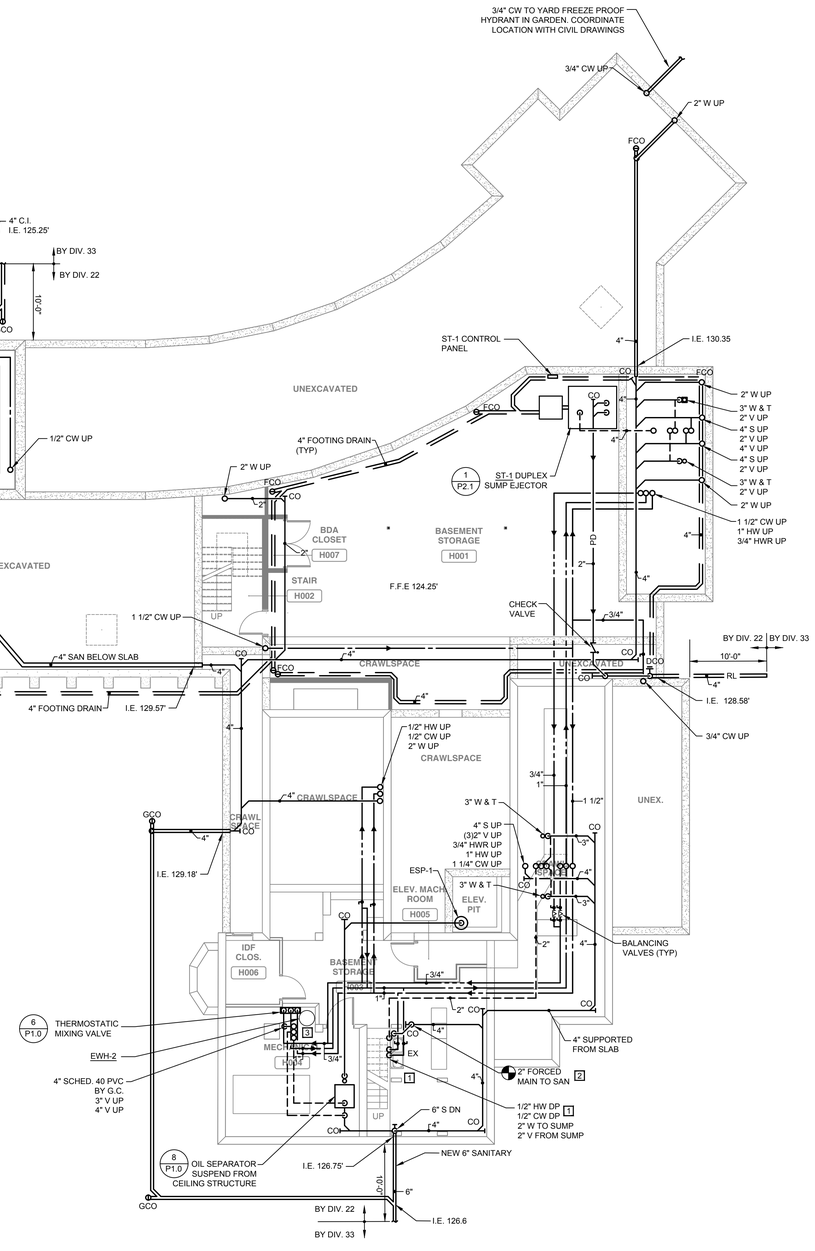

BASEMENT FLOOR PLAN - PLUMBING

SCALE: 1/8" = 1'-0"

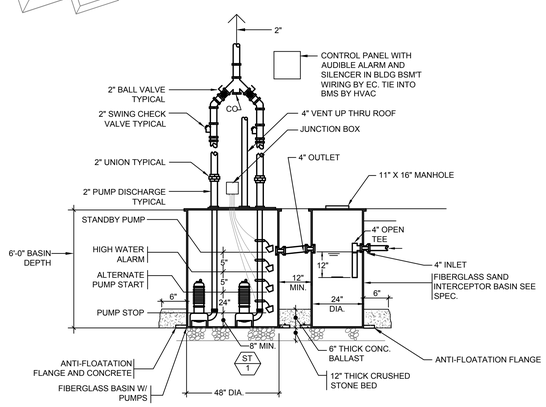

1 P2.1 DUPLEX SUMP EJECTOR PIPING DETAIL

N.T.S.

KEY NOTES:

1. CONNECT NEW 1/2" H & CW TO EXISTING SINK.
2. CONNECT EXISTING WASTE FROM EJECTOR TO NEW SANITARY/WASTE PIPING.
3. RELOCATED ELECTRIC WATER HEATER, REFER TO DETAIL. 6 P0.1

JOHNSON ROBERTS ASSOCIATES INC.

ARCHITECTS

15 PROPERZI WAY
SOMERVILLE, MA
01243 - 3228

GARCIA•GALUSKA•DESOUSA
CONSULTING ENGINEERS INC.
370 FRANKLIN STREET ROAD, BURLINGTON, MA 01803-1217
781-272-2000 • FAX 781-272-2020 • E-MAIL info@g-g-d.com

Revisions:

CONCORD FREE PUBLIC LIBRARY EXPANSION

CONCORD, MA

Sheet Title:

Basement Plumbing Plan

Date: 24-Oct-19 Drawn By: RCD

Scale: 1/8"=1'-0" Project No.: 1714

P2.1

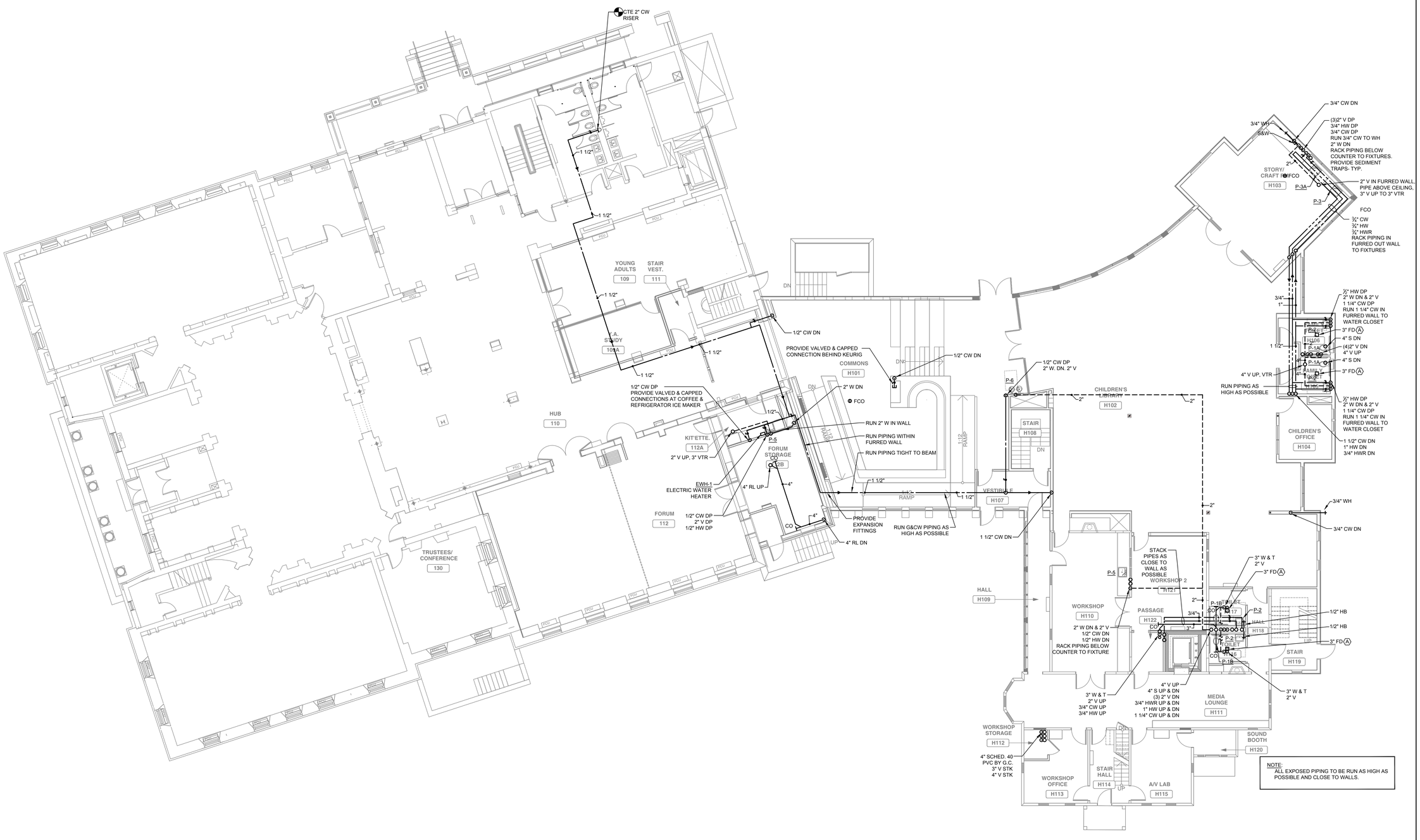

NOTE:
ALL EXPOSED PIPING TO BE RUN AS HIGH AS POSSIBLE AND CLOSE TO WALLS.

GROUND FLOOR PLAN - PLUMBING

SCALE: 1/8" = 1'-0"

JOHNSON ROBERTS ASSOCIATES INC.
ARCHITECTS

15 PROPERZI WAY
SOMERVILLE, MA
01243 - 3228

GARCIA-GALUSKA-DESOUSA
CONSULTING ENGINEERS INC.
370 FRANKLIN CORNER ROAD, LAWRENCE, MA 08840-1017
978-683-0700 • FAX 978-683-0800 • E-MAIL info@g-g-d.com

Revisions:

CONCORD FREE PUBLIC LIBRARY EXPANSION

CONCORD, MA

Sheet Title:

Ground Floor Plumbing Plan

Date: 24-Oct-19 Drawn By: JIG

Scale: 1/8"=1'-0" Project No.: 1714

P2.2

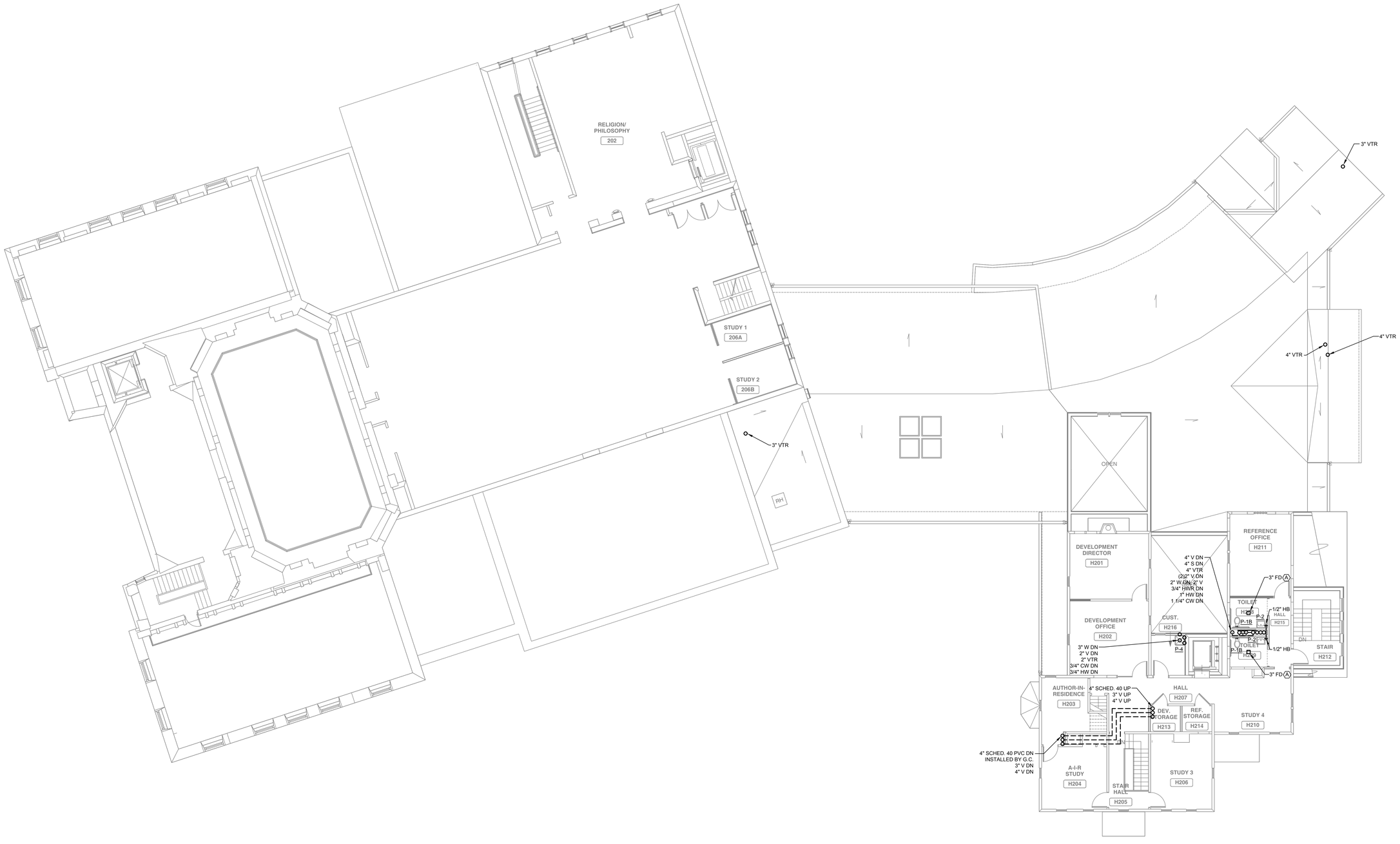

SECOND FLOOR PLAN - PLUMBING

SCALE: 1/8" = 1'-0"

JOHNSON
ROBERTS
ASSOCIATES INC.
ARCHITECTS

15 PROPERZI WAY
SOMERVILLE, MA
01243 - 3228

GARCIA•GALUSKA•DESOUSA
CONSULTING ENGINEERS INC.
370 FRANKLIN CORNER ROAD, LAWRENCE, MA 01843-1037
978-682-0700 • FAX 978-682-0203 • E-MAIL info@g-g-d.com

Revisions:

CONCORD FREE PUBLIC LIBRARY EXPANSION

CONCORD, MA

Sheet Title:

Second Floor Plumbing Plan

Date: 24-Oct-19 Drawn By: JIG

Scale: 1/8"=1'-0" Project No.: 1714

P2.3

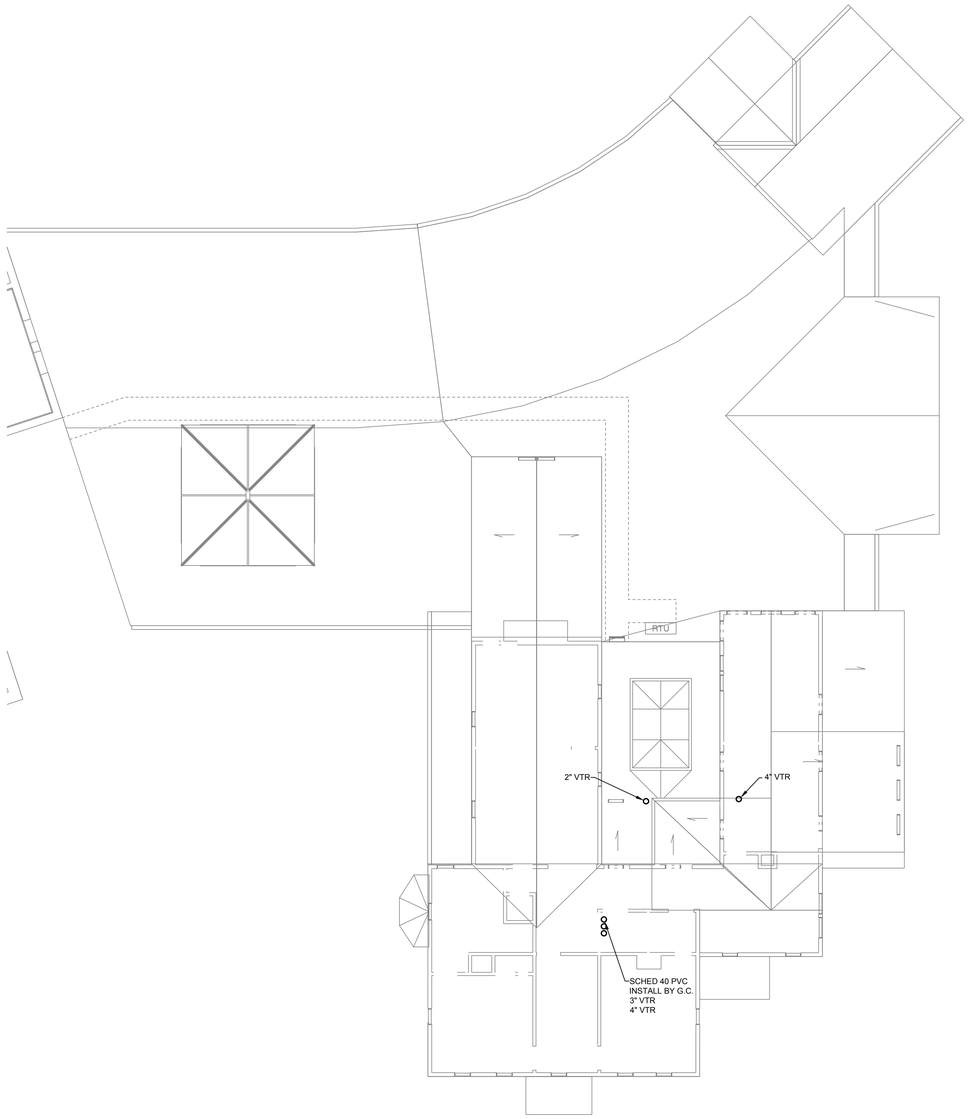

ROOF PLAN - PLUMBING

SCALE: 1/8" = 1'-0"

JOHNSON ROBERTS ASSOCIATES INC.

ARCHITECTS

15 PROPERZI WAY
SOMERVILLE, MA
01243 - 3228

GARCIA-GALUSKA-DESOUSA
CONSULTING ENGINEERS INC.
370 FAUNCE CORNER ROAD, DARTMOUTH, MA. 02747-1217
508-998-5700 • FAX 508-998-0883 • E-MAIL info@g-g-d.com

Revisions:

CONCORD FREE PUBLIC LIBRARY EXPANSION

CONCORD, MA

Sheet Title:

Roof
Plumbing Plan

Date: 24-Oct-19 Drawn By: RCD

Scale: 1/8"=1'-0" Project No.: 1714

P2.4

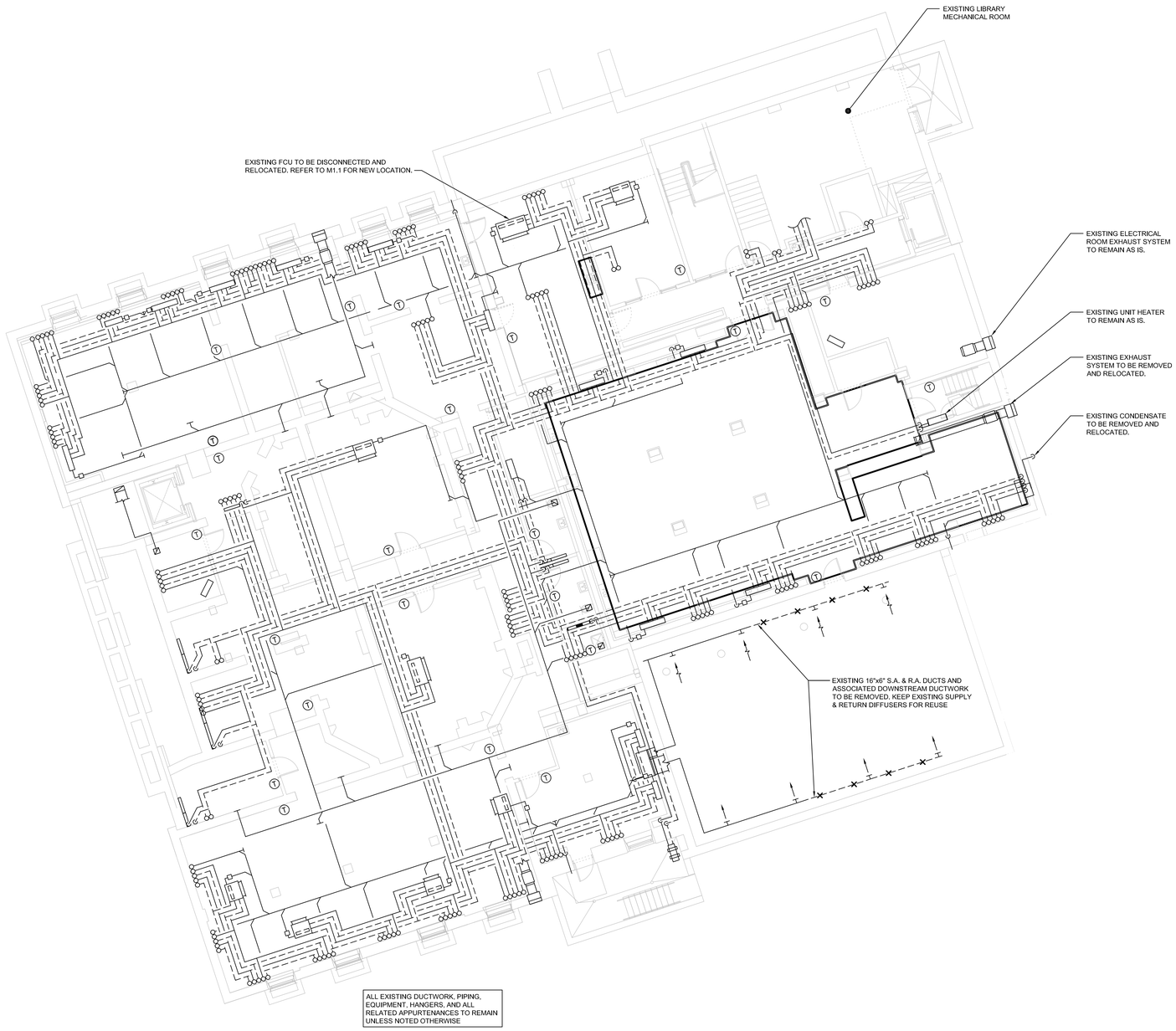

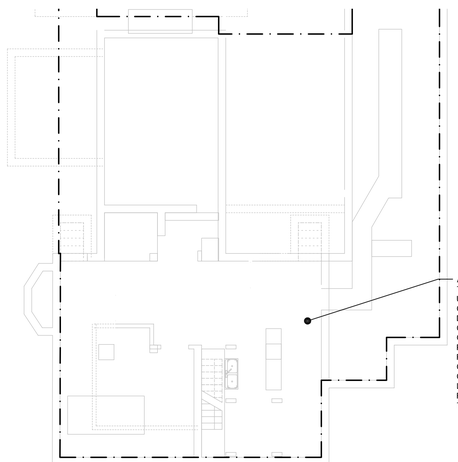

BASEMENT FLOOR PLAN - HVAC DEMO

SCALE: 1/8" = 1'-0"

JOHNSON ROBERTS ASSOCIATES INC.
ARCHITECTS

15 PROPERZI WAY
SOMERVILLE, MA
01243 - 3228

GARCIA-GALUSKA-DESOUSA
CONSULTING ENGINEERS INC.
370 FAUNCE CORNER ROAD, DARTMOUTH, MA 02747-1217
508-998-5700 • FAX 508-998-0883 • E-MAIL info@g-g-d.com

Revisions:

CONCORD FREE PUBLIC LIBRARY EXPANSION

CONCORD, MA

Sheet Title:

Basement Demo Plan - HVAC

Date: 24-Oct-19 Drawn By: RLP

Scale: 1/8"=1'-0" Project No.: 1714

MD.1

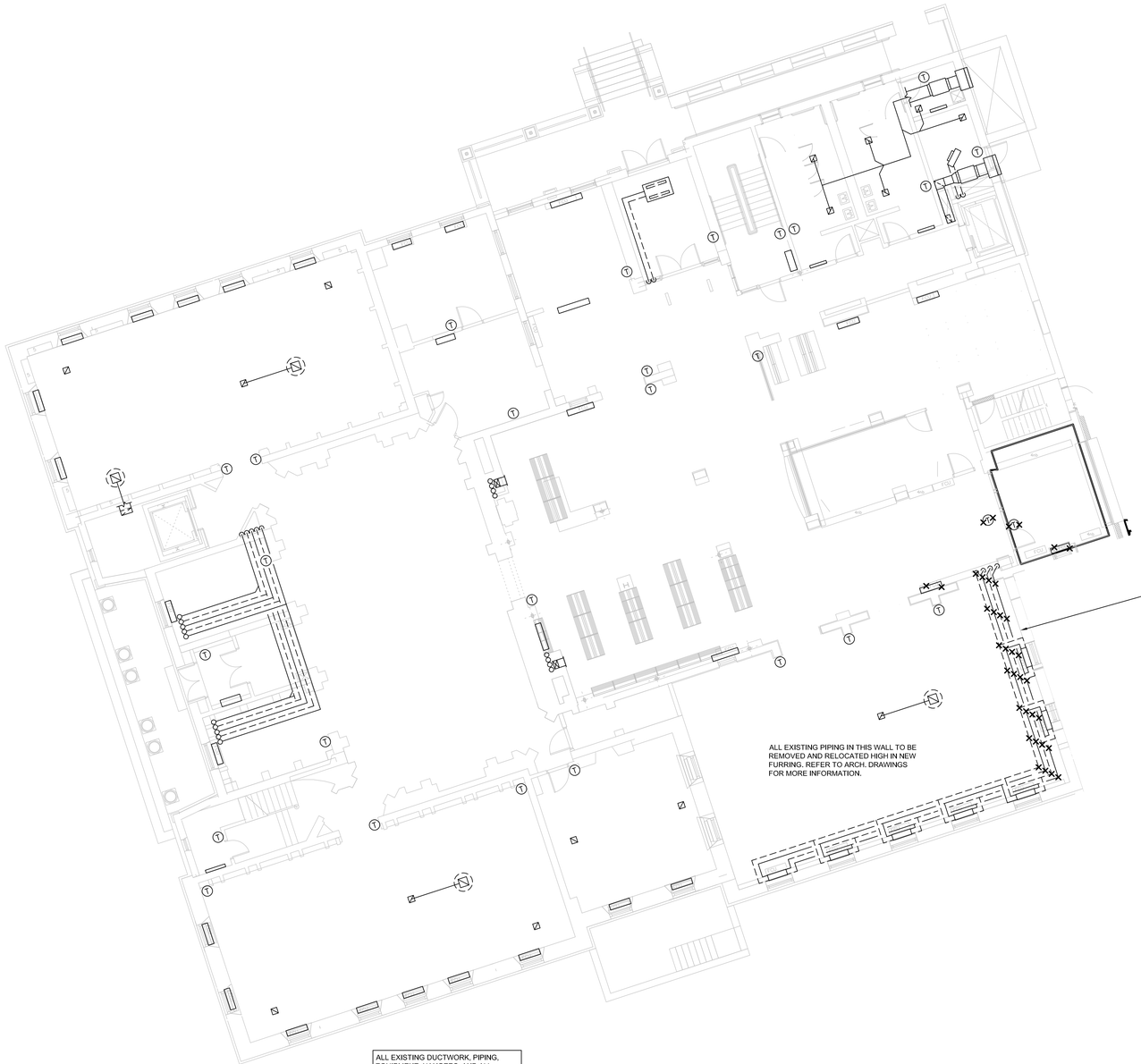

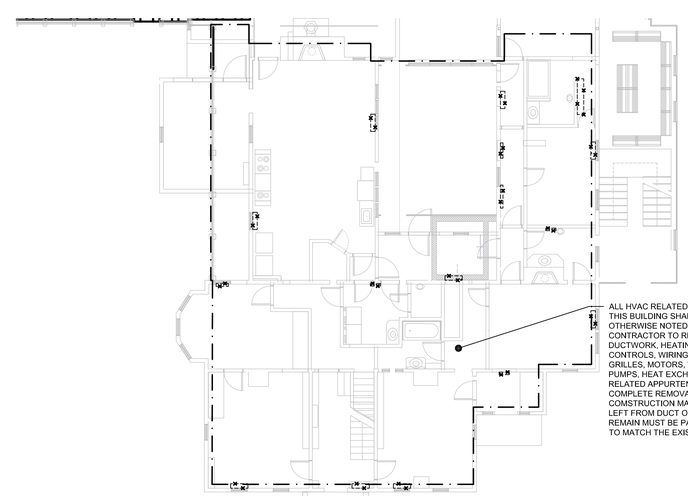

GROUND FLOOR PLAN - HVAC DEMO

SCALE: 1/8" = 1'-0"

JOHNSON ROBERTS ASSOCIATES INC.
ARCHITECTS
15 PROPERZI WAY
SOMERVILLE, MA
01243 - 3228

GARCIA-GALUSKA-DESOUSA
CONSULTING ENGINEERS INC.
370 FAUNCE CORNER ROAD, DARTMOUTH, MA 02747-1217
508-998-0700 • FAX 508-998-0803 • E-MAIL info@g-g-d.com

Revisions:

CONCORD FREE PUBLIC LIBRARY EXPANSION

CONCORD, MA

Sheet Title:

Ground Floor Demo Plan - HVAC

Date: 24-Oct-19 Drawn By: RLP

Scale: 1/8"=1'-0" Project No.: 1714

MD.2

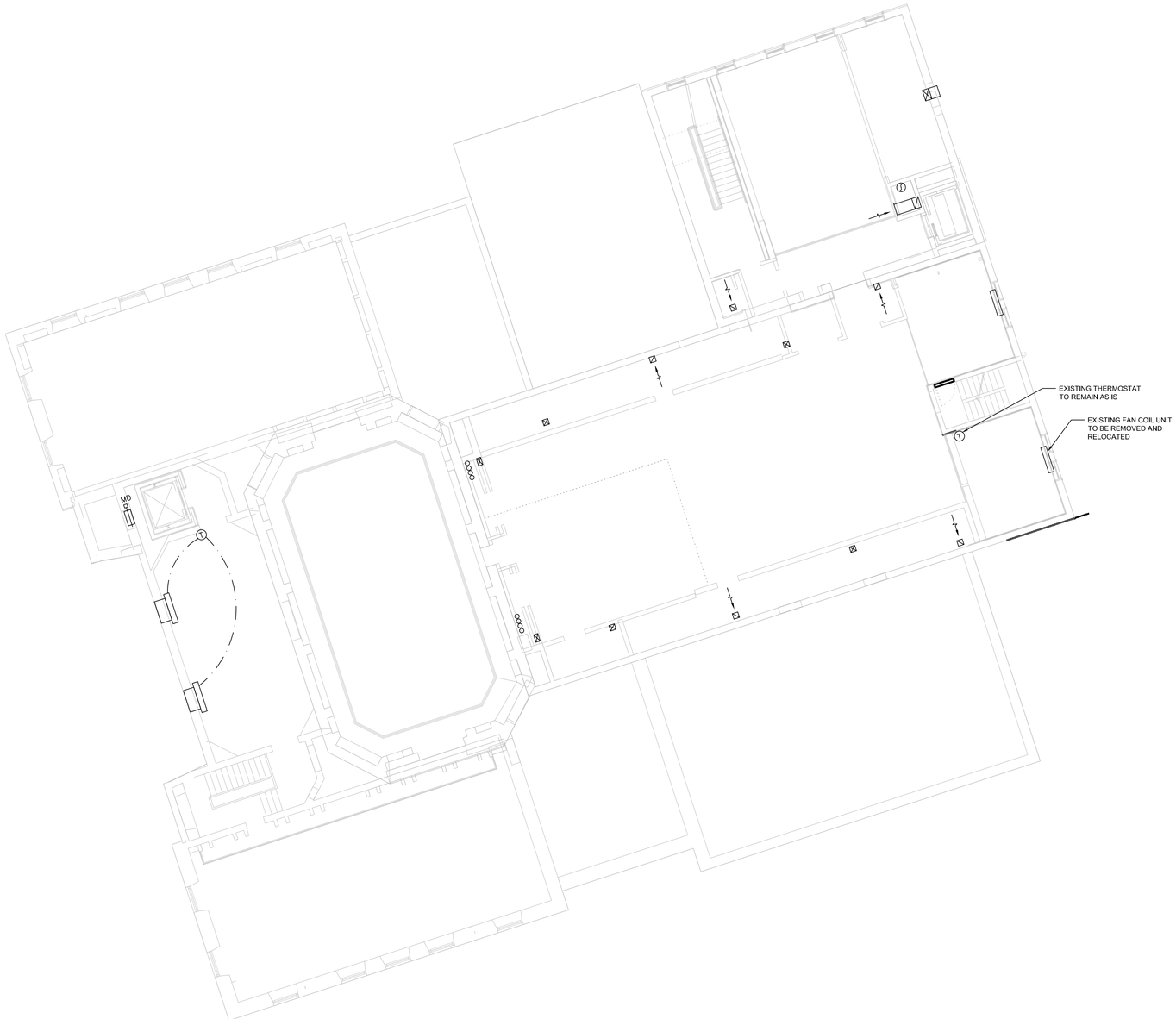

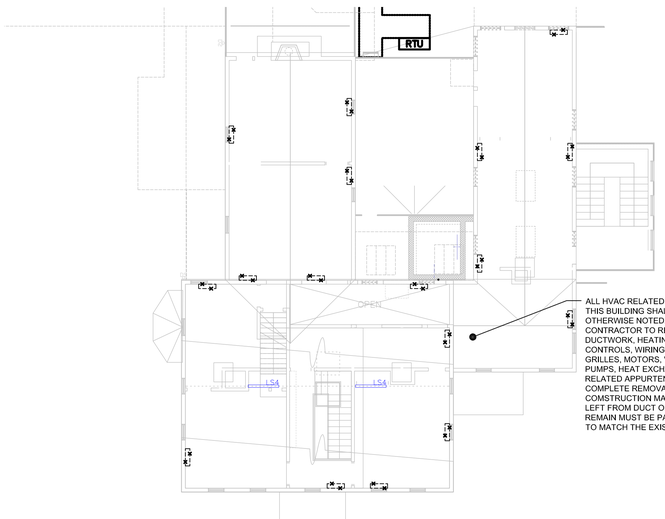

ALL HVAC RELATED APPURTENANCES IN THIS BUILDING SHALL BE DELETED UNLESS OTHERWISE NOTED. DEMOLITION CONTRACTOR TO REMOVEALL EXISTING DUCTWORK, HEATING PIPING, COILS, CONTROLS, WIRING, PNEUMATIC TUBING, GRILLES, MOTORS, VALVES, DAMPERS, PUMPS, HEAT EXCHANGERS, & ALL HVAC RELATED APPURTENANCES FOR A COMPLETE REMOVAL. COORDINATE WITH COMSTRUCTION MANAGER. ANY HOLES LEFT FROM DUCT OR PIPE IN WALLS TO REMAIN MUST BE PATCHED AND FINISHED TO MATCH THE EXISTING SURFACE.

SECOND FLOOR PLAN - HVAC DEMO

SCALE: 1/8" = 1'-0"

JOHNSON ROBERTS ASSOCIATES INC.
ARCHITECTS

15 PROPERZI WAY
SOMERVILLE, MA
01243 - 3228

GARCIA-GALUSKA-DESOUSA
CONSULTING ENGINEERS INC.
370 FAUNCE CORNER ROAD, DARTMOUTH, MA 02747-1217
508-998-5700 • FAX 508-998-0883 • E-MAIL info@g-g-d.com

Revisions:

CONCORD FREE PUBLIC LIBRARY EXPANSION

CONCORD, MA

Sheet Title:

Second Floor Demo Plan - HVAC

Date: 24-Oct-19 Drawn By: RLP

Scale: 1/8"=1'-0" Project No.: 1714

MD.3

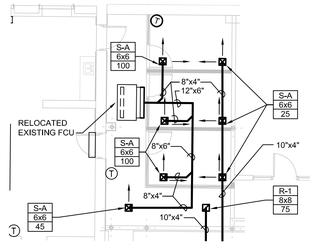

ALT. #2 - HVAC DUCTWORK

SCALE: 1/8" = 1'-0"

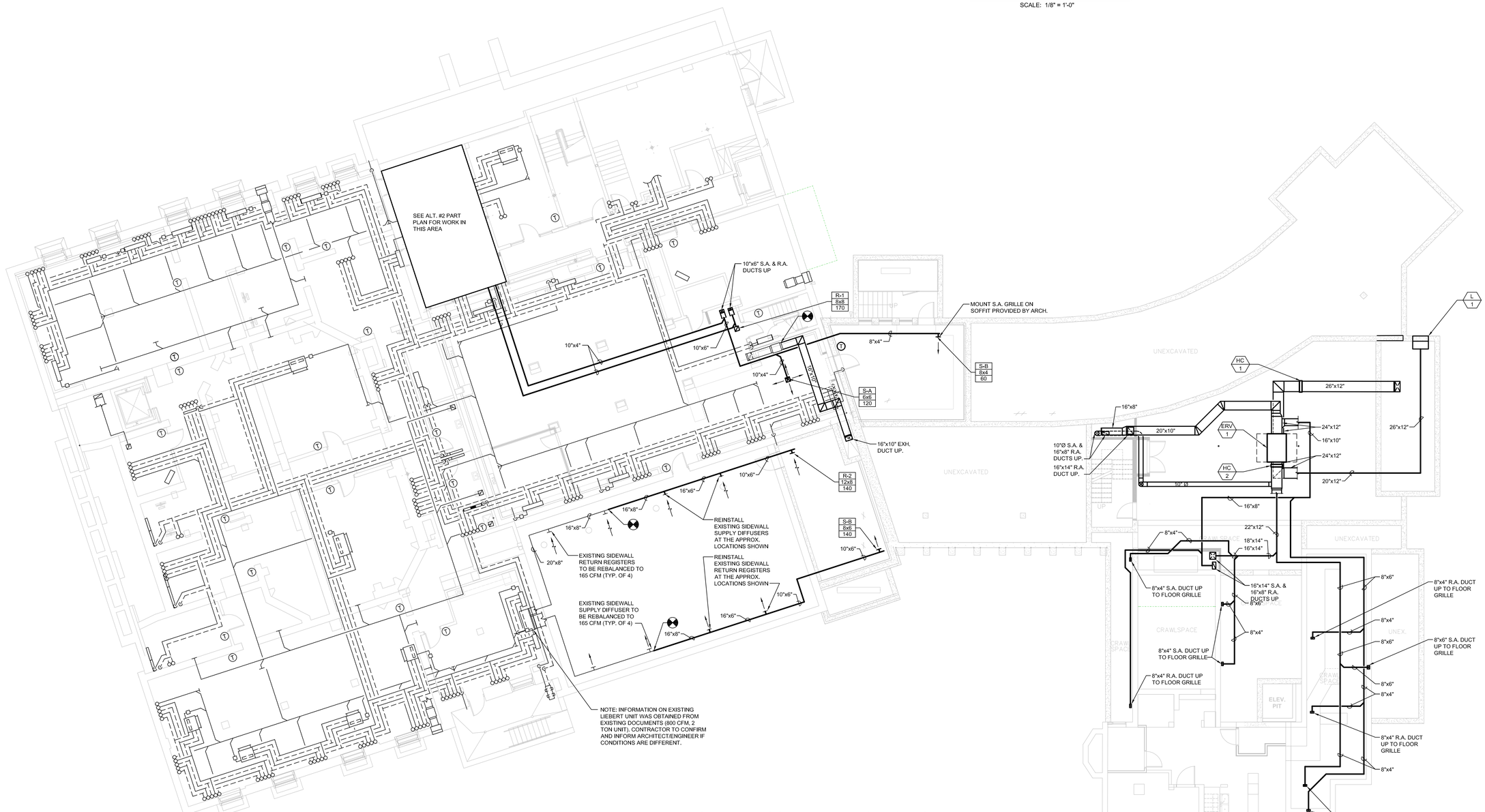

BASEMENT FLOOR PLAN - HVAC DUCTWORK

SCALE: 1/8" = 1'-0"

JOHNSON
ROBERTS
ASSOCIATES INC.
ARCHITECTS

15 PROPERZI WAY
SOMERVILLE, MA
01243 - 3228

GARCIA-GALUSKA-DESOUSA
CONSULTING ENGINEERS INC.
370 FAUNCE CORNER ROAD, DARTMOUTH, MA 02747-1317
508-998-5700 • FAX 508-998-0883 • E-MAIL info@g-g-d.com

Revisions:

CONCORD FREE PUBLIC LIBRARY EXPANSION

CONCORD, MA

Sheet Title:

Basement Ductwork Plan - HVAC

Date: 24-Oct-19 Drawn By: RLP

Scale: 1/8"=1'-0" Project No.: 1714

M1.1

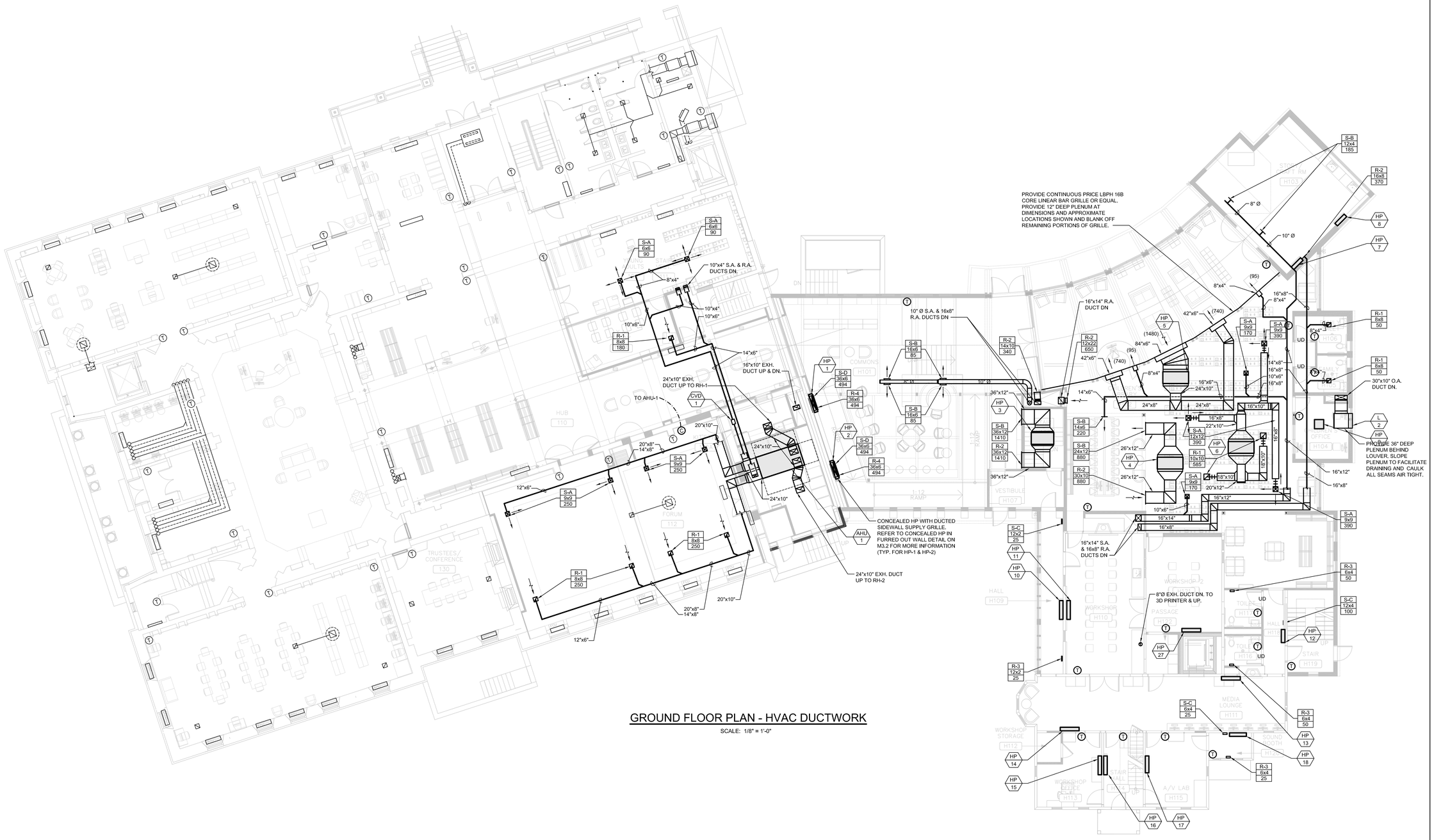

GROUND FLOOR PLAN - HVAC DUCTWORK

SCALE: 1/8" = 1'-0"

JOHNSON ROBERTS ASSOCIATES INC.

ARCHITECTS

15 PROPERZI WAY
SOMERVILLE, MA
01243 - 3228

GARCIA-GALUSKA-DESOUSA
CONSULTING ENGINEERS INC.
370 FAUNCE CORNER ROAD, DARTMOUTH, MA 02747-1217
508-998-5700 • FAX 508-998-0883 • E-MAIL info@g-g-d.com

Revisions:

CONCORD FREE PUBLIC LIBRARY EXPANSION

CONCORD, MA

Sheet Title:

Ground Floor Ductwork Plan - HVAC

Date: 24-Oct-19 Drawn By: RLP

Scale: 1/8"=1'-0" Project No.: 1714

M1.2

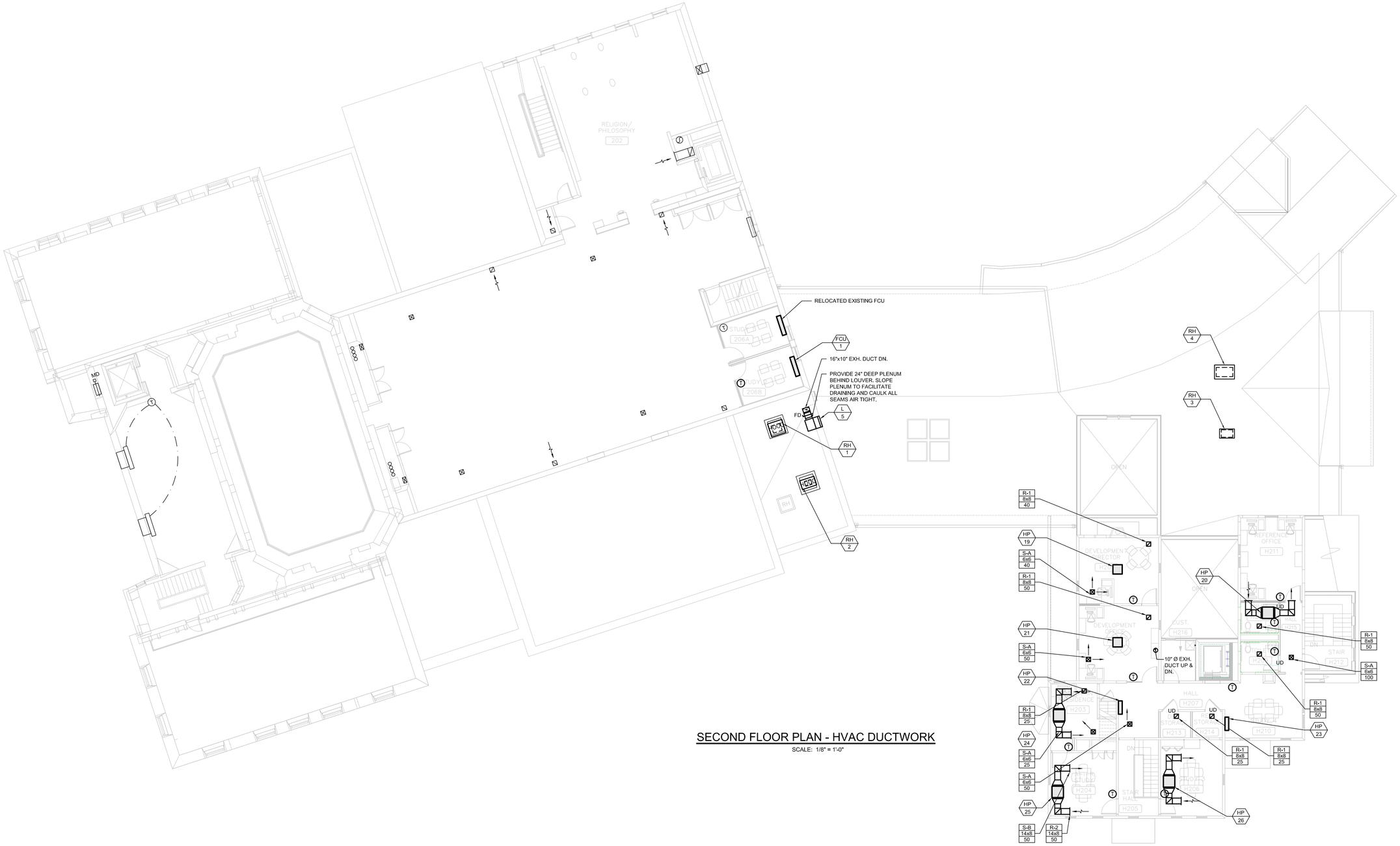

SECOND FLOOR PLAN - HVAC DUCTWORK

SCALE: 1/8" = 1'-0"

JOHNSON ROBERTS ASSOCIATES INC.

ARCHITECTS

15 PROPERZI WAY
SOMERVILLE, MA
01243 - 3228

GARCIA-GALUSKA-DESOUSA
CONSULTING ENGINEERS INC.
370 FAUNCE CORNER ROAD, DARTMOUTH, MA 02747-1217
508-998-5700 • FAX 508-998-0883 • E-MAIL info@g-g-d.com

Revisions:

CONCORD FREE PUBLIC LIBRARY EXPANSION

CONCORD, MA

Sheet Title:

Second Floor Ductwork Plan - HVAC

Date: 24-Oct-19 Drawn By: RLP

Scale: 1/8"=1'-0" Project No.: 1714

M1.3

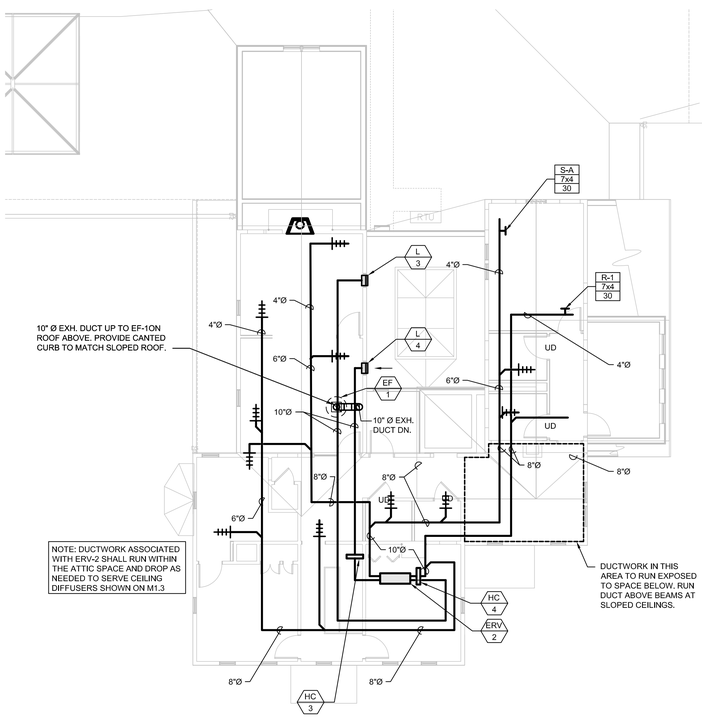

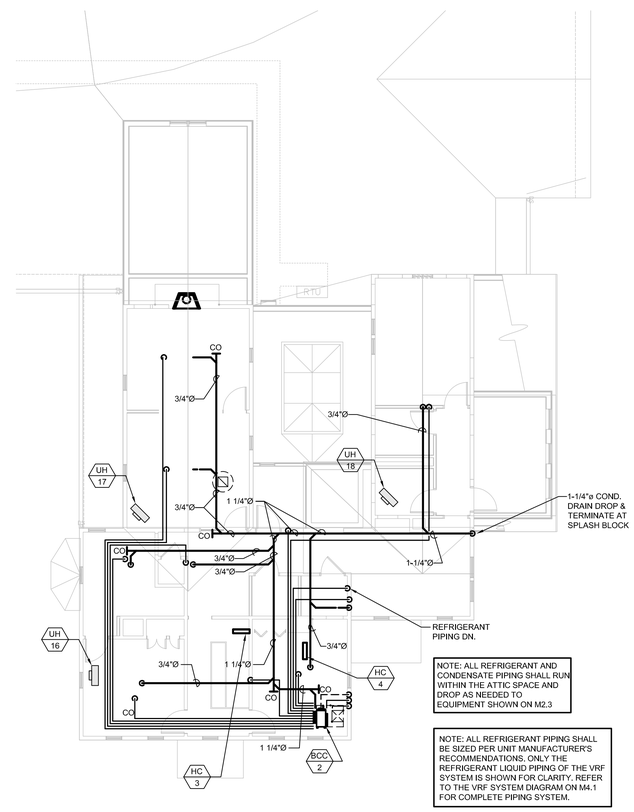

JOHNSON ROBERTS ASSOCIATES INC.
ARCHITECTS

15 PROPERZI WAY
SOMERVILLE, MA
01243 - 3228

GARCIA-GALUSKA-DESOUSA
CONSULTING ENGINEERS INC.
370 FAUNCE CORNER ROAD, DARTMOUTH, MA 02747-1217
508-998-5700 • FAX 508-998-0883 • E-MAIL info@g-g-d.com

Revisions:

CONCORD FREE PUBLIC LIBRARY EXPANSION

CONCORD, MA

Sheet Title:

Attic Plans - HVAC

Date: 24-Oct-19 Drawn By: RLP

Scale: 1/8"=1'-0" Project No.: 1714

M1.4

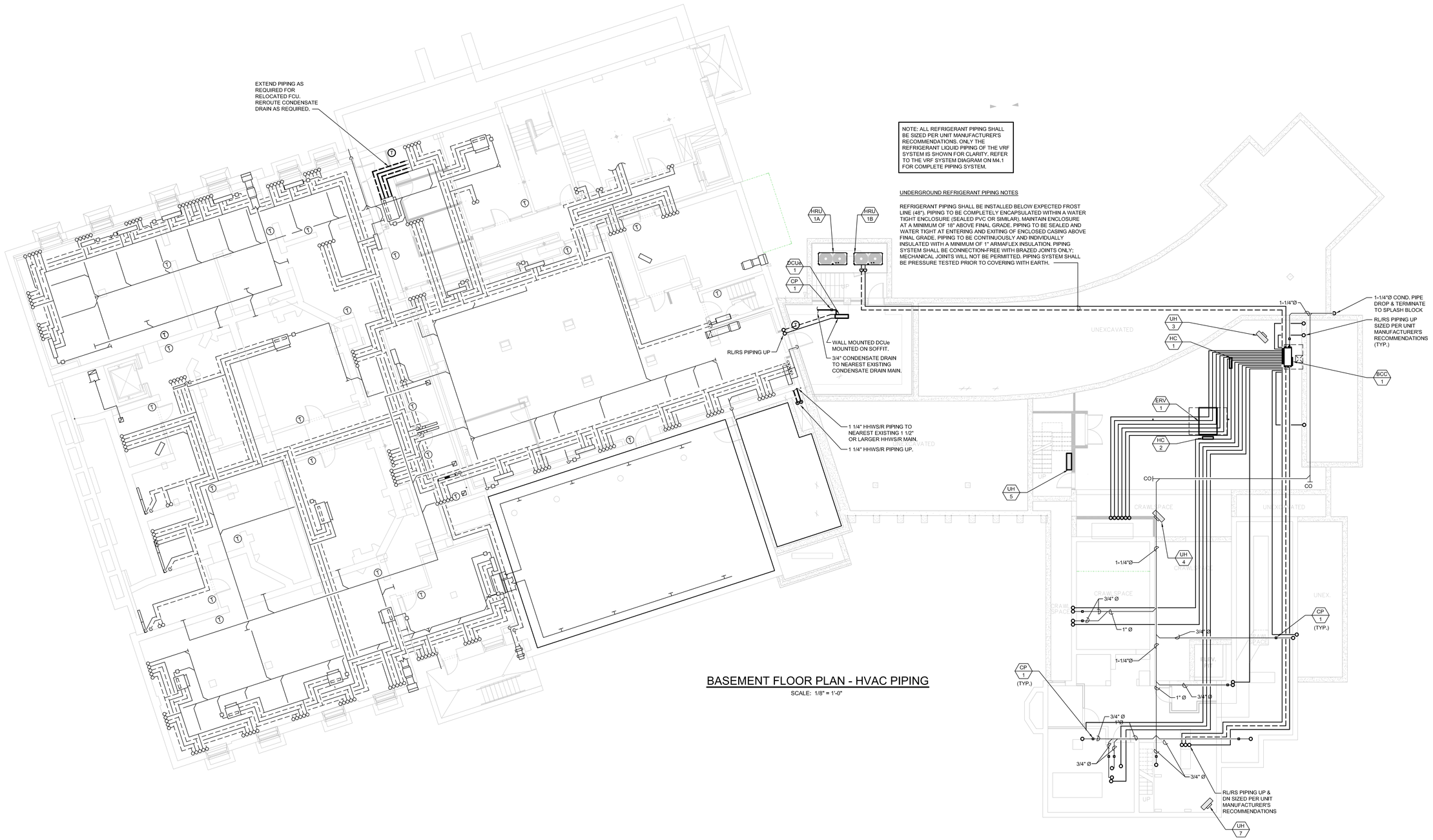

NOTE: ALL REFRIGERANT PIPING SHALL BE SIZED PER UNIT MANUFACTURER'S RECOMMENDATIONS. ONLY THE REFRIGERANT LIQUID PIPING OF THE VRF SYSTEM IS SHOWN FOR CLARITY. REFER TO THE VRF SYSTEM DIAGRAM ON M4.1 FOR COMPLETE PIPING SYSTEM.

UNDERGROUND REFRIGERANT PIPING NOTES

REFRIGERANT PIPING SHALL BE INSTALLED BELOW EXPECTED FROST LINE (48"). PIPING TO BE COMPLETELY ENCAPSULATED WITHIN A WATER TIGHT ENCLOSURE (SEALED PVC OR SIMILAR). MAINTAIN ENCLOSURE AT A MINIMUM OF 18" ABOVE FINAL GRADE. PIPING TO BE SEALED AND WATER TIGHT AT ENTERING AND EXITING OF ENCLOSED CASING ABOVE FINAL GRADE. PIPING TO BE CONTINUOUSLY AND INDIVIDUALLY INSULATED WITH A MINIMUM OF 1" ARMAFLEX INSULATION. PIPING SYSTEM SHALL BE CONNECTION-FREE WITH BRAZED JOINTS ONLY: MECHANICAL JOINTS WILL NOT BE PERMITTED. PIPING SYSTEM SHALL BE PRESSURE TESTED PRIOR TO COVERING WITH EARTH.

BASEMENT FLOOR PLAN - HVAC PIPING

SCALE: 1/8" = 1'-0"

JOHNSON ROBERTS ASSOCIATES INC.
ARCHITECTS

15 PROPERZI WAY
SOMERVILLE, MA
01243 - 3228

GARCIA-GALUSKA-DESOUSA
CONSULTING ENGINEERS INC.
370 FAUNCE CORNER ROAD, DARTMOUTH, MA 02747-1217
508-998-5700 • FAX 508-998-0883 • E-MAIL info@g-g-d.com

Revisions:

CONCORD FREE PUBLIC LIBRARY EXPANSION

CONCORD, MA

Sheet Title:

Basement Piping Plan - HVAC

Date: 24-Oct-19 Drawn By: RLP

Scale: 1/8"=1'-0" Project No.: 1714

M2.1

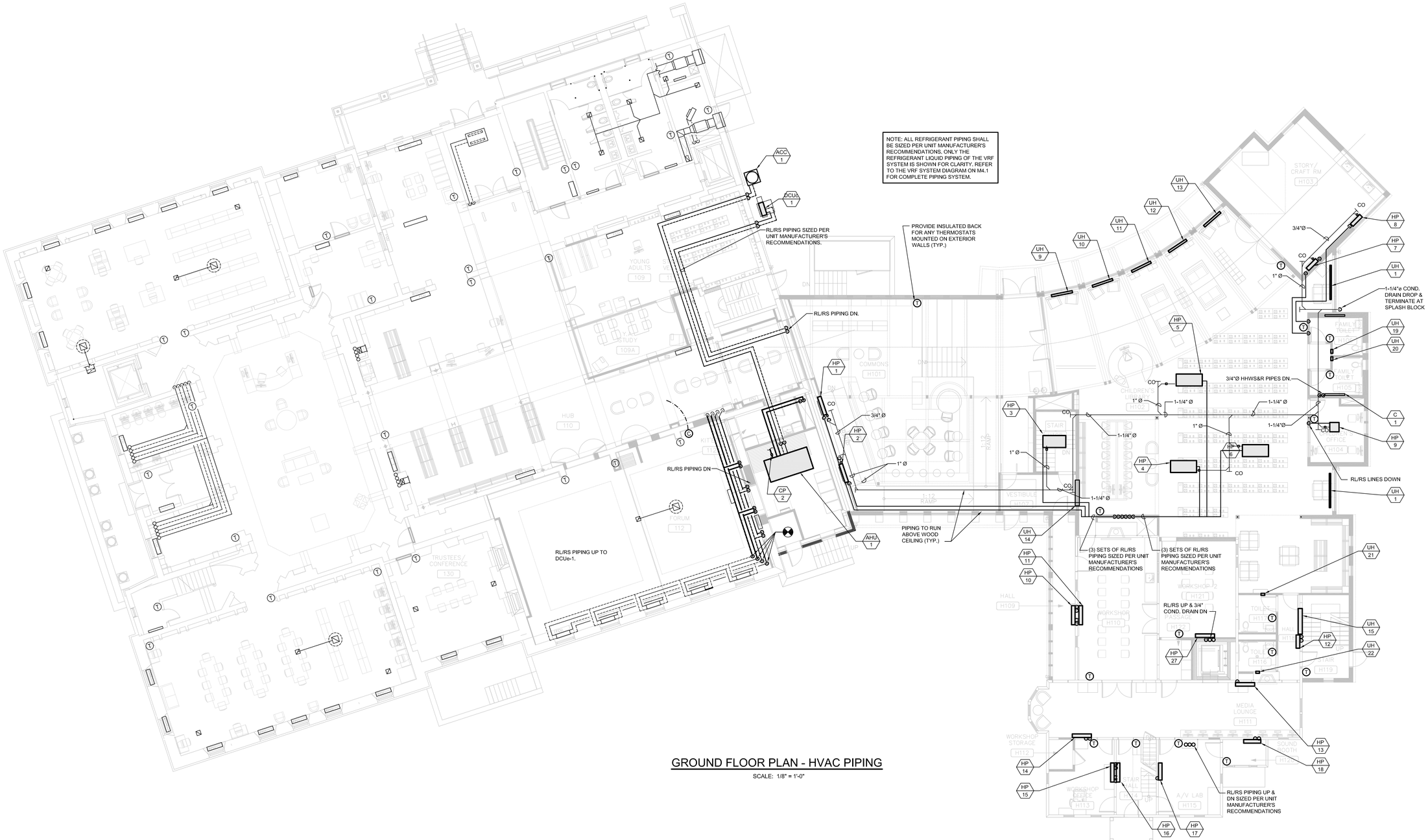

GROUND FLOOR PLAN - HVAC PIPING

SCALE: 1/8" = 1'-0"

JOHNSON ROBERTS ASSOCIATES INC.
ARCHITECTS

15 PROPERZI WAY
SOMERVILLE, MA
01243 - 3228

GARCIA-GALUSKA-DESOUSA
CONSULTING ENGINEERS INC.
370 FAUNCE CORNER ROAD, DARTMOUTH, MA 02747-1217
508-998-5700 • FAX 508-998-0883 • E-MAIL info@g-g-d.com

Revisions:

CONCORD FREE PUBLIC LIBRARY EXPANSION

CONCORD, MA

Sheet Title:

Ground Floor Piping Plan - HVAC

Date: 24-Oct-19 Drawn By: RLP

Scale: 1/8"=1'-0" Project No.: 1714

M2.2

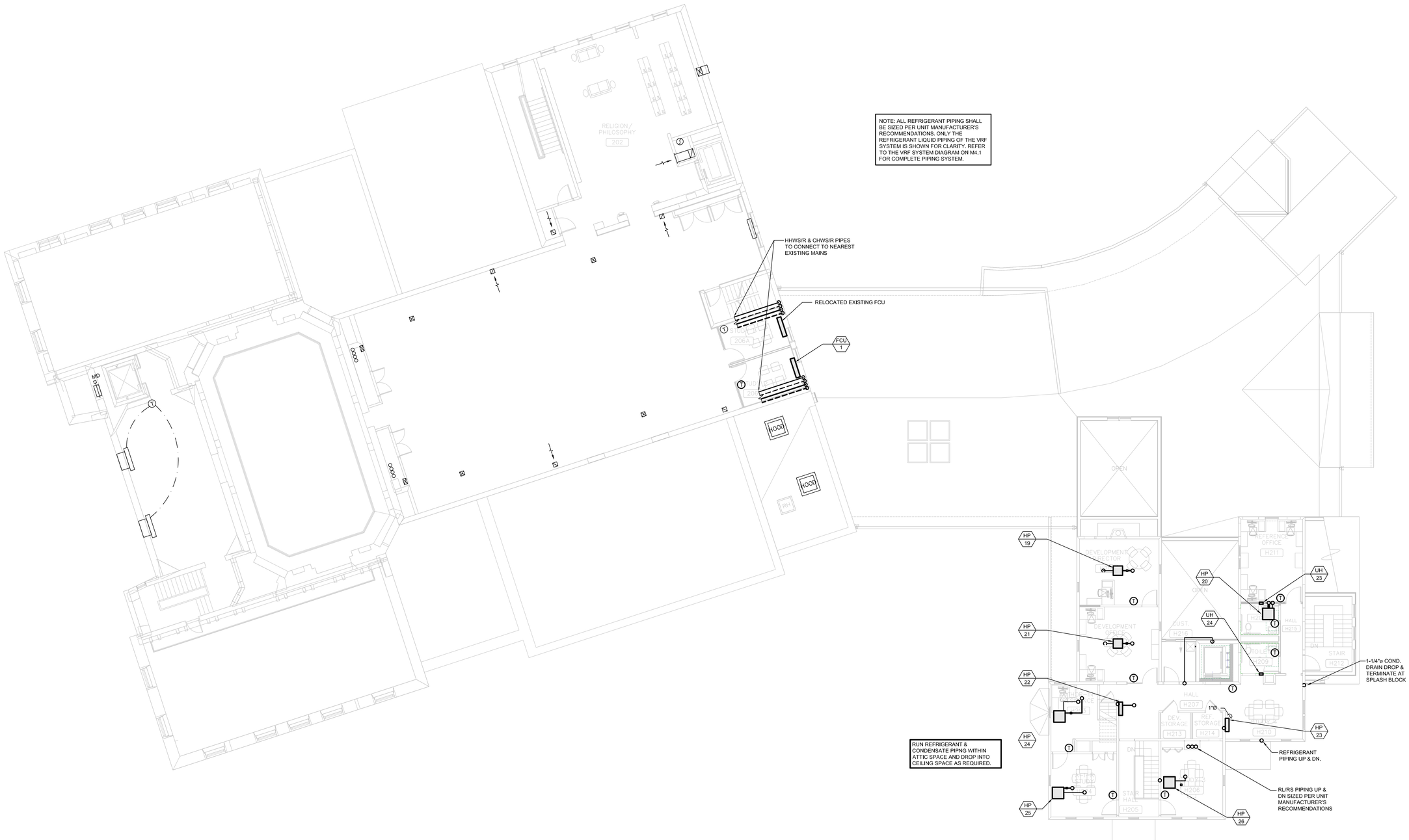

SECOND FLOOR PLAN - HVAC PIPING

SCALE: 1/8" = 1'-0"

JOHNSON ROBERTS ASSOCIATES INC.
ARCHITECTS

15 PROPERZI WAY
SOMERVILLE, MA
01243 - 3228

GARCIA-GALUSKA-DESOUSA
CONSULTING ENGINEERS INC.
370 FAUNCE CORNER ROAD, DARTMOUTH, MA 02747-1317
508-998-5700 • FAX 508-998-0883 • E-MAIL info@g-g-d.com

Revisions:

CONCORD FREE PUBLIC LIBRARY EXPANSION

CONCORD, MA

Sheet Title:

Second Floor Piping Plan - HVAC

Date: 24-Oct-19 Drawn By: RLP

Scale: 1/8"=1'-0" Project No.: 1714

M2.3

INDOOR AIR-HANDLING UNIT

UNIT NO.	MANUF. NO.	AREA SERVED	TOTAL C.F.M.	O.A. C.F.M.	MAX. COIL VEL. F.P.M.	HOT WATER HEATING DATA								SPLIT DX COOLING COIL						VAV CONTROL	SUPPLY AIR FAN				RETURN AIR FAN				ELECTRICAL		ENERGY WHEEL		UNIT WEIGHT (Lbs)	REMARKS
						ENT. AIR°F	LVG. AIR°F	EWT	LWT	GPM	HEATING M.B.H.	AIR P.D.	H20 P.D.	ENT. COND. D.B.°F	ENT. COND. W.B.°F	LVG. COND. D.B.°F	LVG. COND. W.B.°F	M.B.H. SENS.	M.B.H. TOTAL	HOT GAS REHEAT COIL LDB	HOT GAS REHEAT COIL LWB	VF DRIVES	E.S.P. IN.W.G.	H.P.	R.P.M	WHEEL DIA.	E.S.P. IN.W.G.	H.P.	R.P.M	WHEEL DIA.	MCA	VOLT/PH.	CAPACITY (MBH) WINTER	CAPACITY (MBH) SUMMER		
AHU-1	ERCH	LARGE MEETING ROOM	1,300	1,300	500	60.0	75.0	200	180	6.5	63.1	0.04	1.3	76.3	65.1	55.0	55.0	38.4	60.4	70.0		YES	1.0"	1.5	1401		1.0"	1.5	1388		16.3	208/3	77.4	44.2	1,464	SEE BELOW

SELECTION BASED ON "GREENHECK"
AIR-HANDLING UNIT MANUFACTURER SHALL PROVIDE VARIABLE FREQUENCY DRIVES FOR SUPPLY AND EXHAUST AIR FANS AND ENERGY RECOVERY WHEEL FOR EACH UNIT IN ACCORDANCE WITH DIV. 260000 REQUIREMENTS.

AIR CONDITIONING DESIGN DATA

DESIGN AREA	SUMMER OUT D.B.	SUMMER OUT W.B.	SUMMER IN D.B.	SUMMER IN W.B.	WINTER OUT D.B.	WINTER IN D.B.
CONCORD, MASSACHUSETTS	91	74	75	68	5	70

NOTE: INSIDE SETPOINTS SHALL BE +/- 2° F

AIR COOLED CONDENSING UNITS

UNIT NO.	MANUF. SERIES	SERVICE	NOMINAL TONS	EER/SEER	VOLT/PH.	MCA	REMARKS
ACC-1	24ACC	AHU-1	3.5	12.0/14.0	208/1	22.3	

SELECTION BASED ON "CARRIER"

ENERGY RECOVERY VENTILATION UNITS

UNIT NO.	MANUF. NO.	AREA SERVED	TOTAL CFM	O.A. CFM	SUMMER EFF.	WINTER EFF.	S.A. ESP.	SUPPLY FAN HP	E.A. ESP.	EXHAUST FAN HP	ELECTRICAL DATA MCA	ELECTRICAL DATA VOLTS	PH	HZ	REMARKS
ERV-1	ECV-20H	FIRST FLOOR	1830	1830	52.6%	64.6%	0.75"	1.5	0.75"	1.5	24.8	208	1	60	
ERV-2	MINICORE-5-VG	SECOND FLOOR	295	295	83.8%	92.5%	0.5"	1/4	0.5"	1/4	3.8	208	1	60	

SELECTION BASED ON "GREENHECK"
UNIT MANUFACTURER SHALL PROVIDE FACTORY-INSTALLED EC MOTORS
CONTRACTOR TO PROVIDE ADDITIONAL DROP DOWN REGULATORS TO MEET REQUIRED OPERATING PRESSURE

FAN COILS

UNIT NO.	MANUF. NO.	TOTAL CFM	O.A. CFM	HEATING ENT. AIR	HEATING LVG. AIR	HEATING AIR P.D.	HEATING MBH	HEATING GPM	COOLING EDB	COOLING EWB	COOLING LDB	COOLING LWB	COOLING SENS.	COOLING TOT.	COOLING GPM	FAN HP	FAN VOLT	FAN PH.	FAN MCA	REMARKS
FC-1	FFBB040	322	--	60	117.1	-	16.4	1.7	75.0	63.0	58.6	56.7	5.7	6.0	1.3	1/4	120	1	1.3	

SELECTION BASED ON RITTLING
ALL SELECTIONS BASED ON MEDIUM SPEED

EXHAUST FANS

UNIT NO.	MANUF. NO.	SERVICE	DRIVE TYPE	TIP SPEED	ESP	CFM	RPM	SONES	MOTOR HP	MOTOR V	MOTOR PH	CONTROL TYPE	CONTROL SYST.	REMARKS
EF-1	G-VG	H110 WORKSHOP 3D PRINTER	DIRECT	4,124	0.5"	500	1448	8.1	1/6	120	1	1	SWITCH	

SELECTION BASED ON "GREENHECK"

LOUVERS

UNIT NO.	MODEL	DIMENSION (INCHES) WIDTH	DIMENSION (INCHES) HEIGHT	FREE AREA	REMARKS
L-1	EHH	36"	20"	1.94 S.F.	EXHAUST
L-2	EHH	36"	34"	3.88 S.F.	INTAKE
L-3	EHH	17"	11"	0.3 S.F.	EXHAUST
L-4	EHH	24"	13"	0.6 S.F.	INTAKE
L-5	EHH	27"	12"	0.51 S.F.	EXHAUST

SELECTION BASED ON "GREENHECK"

ROOF HOOD SCHEDULE

UNIT NO.	MODEL	DIMENSION (INCHES) A	B	C	"TW"	"TL"	THR. AREA	REMARKS
RH-1	FGI	33"	36"	16"	18"	22"	2.75 S.F.	AHU-1 INTAKE
RH-2	FGR	22"	36"	14"	12"	16"	1.33 S.F.	AHU-1 RELIEF

SELECTION BASED ON "GREENHECK"

DIFFUSER

NO.	STYLE
S-A	AMX
S-B	910
S-C	LBPH 16A
S-D	LBPH 15A

SELECTION BASED ON "PRICE."

NOTE #1: REFER TO DRAWINGS FOR THROW DIRECTION, SIZE & CFM.

NOTE #2: PROVIDE CONCEALED PLASTER FRAME AT WALLS & NARROW FRAME AT FLOORS FOR ALL LBPH DIFFUSERS

REGISTER

NO.	STYLE
1	80
2	96
3	LBPH 16A
4	LBPH 15A

SELECTION BASED ON "PRICE."

NOTE #1: REFER TO DRAWINGS FOR THROW DIRECTION, SIZE & CFM.

CONSTANT VOLUME DAMPER

UNIT NO.	MANUF. NO.	DIA. (INCHES)	MIN. VOL.	MAX. VOL.	REMARKS
CVD-1	MR. MAX	8	150	530	

SELECTION BASED ON "ALDES"
REFER TO FLOOR PLANS FOR QUANTITIES.

VRF HEAT PUMP SCHEDULE (INDOOR UNIT)

TAG NO.	MANUF. SERIES	LOCATION	COOLING (BTU/H)	HEATING (BTU/H)	AIRFLOW (CFM)	ELECTRICAL DATA MCA	MOCP	VOLTS	PH	HZ	ASSOCIATED OUTDOOR UNIT	REMARKS
HP-1	PFFY	H101 COMMONS	24,000	27,000	494	0.59	15	208	1	60	HRU-1	CONCEALED, DUCTED
HP-2	PFFY	H101 COMMONS	24,000	27,000	494	0.59	15	208	1	60	HRU-1	CONCEALED, DUCTED
HP-3	PEFY	H101 COMMONS	48,000	54,000	1412	3.51	15	208	1	60	HRU-1	--
HP-4	PEFY	H102B CHILD COMPS	24,000	27,000	883	2.73	15	208	1	60	HRU-1	--
HP-5	PEFY	CHILDREN'S COMMONS	54,000	60,000	1483	3.51	15	208	1	60	HRU-1	--
HP-6	PEFY	H102 CHILD LIBRARY	36,000	40,000	1165	3.50	15	208	1	60	HRU-1	--
HP-7	PFFY	H103 STORY/CRAFT RM	18,000	20,000	459	0.48	15	208	1	60	HRU-1	--
HP-8	PFFY	H103 STORY/CRAFT RM	18,000	20,000	459	0.48	15	208	1	60	HRU-1	--
HP-9	PLFY	H104 CHILD OFFICE	6,000	6,700	315	0.28	15	208	1	60	HRU-1	--
HP-10	PFFY	H109 HALL	24,000	27,000	494	0.59	15	208	1	60	HRU-1	--
HP-11	PFFY	H110 WORKSHOP	12,000	13,500	318	0.34	15	208	1	60	HRU-1	--
HP-12	PFFY	H118 HALL	6,000	6,700	229	0.32	15	208	1	60	HRU-1	--
HP-13	PFFY	H111 MEDIA LOUNGE	15,000	17,000	388	0.40	15	208	1	60	HRU-1	--
HP-14	PFFY	H111 MEDIA LOUNGE	15,000	17,000	388	0.40	15	208	1	60	HRU-1	--
HP-15	PEFY	H113 WORKSHOP OFF.	12,000	13,500	318	0.34	15	208	1	60	HRU-1	--
HP-16	PFFY	H114 STAIR HALL	6,000	6,700	229	0.32	15	208	1	60	HRU-1	CONCEALED
HP-17	PFFY	H115 VIDEO/AUDIO	8,000	9,000	230	0.32	15	208	1	60	HRU-1	--
HP-18	PFFY	H120 SOUND BOOTH	6,000	6,700	229	0.32	15	208	1	60	HRU-1	--
HP-19	PLFY	H201 DEVELOPMENT DIR	8,000	9,000	315	0.28	15	208	1	60	HRU-1	--
HP-20	PEFY	H211 REFERENCE OFF.	15,000	17,000	494	1.45	15	208	1	60	HRU-1	--
HP-21	PLFY	H202 DEV. OFFICE	8,000	9,000	315	0.45	15	208	1	60	HRU-1	--
HP-22	PFFY	H207 HALL	5,000	5,600	229	0.32	15	208	1	60	HRU-1	--
HP-23	PFFY	H210 CONFERENCE	12,000	13,500	318	0.34	15	208	1	60	HRU-1	--
HP-24	PEFY	H203 A-I-R	12,000	13,500	371	1.20	15	208	1	60	HRU-1	--
HP-25	PEFY	H204 A-I-R MEETING	12,000	13,500	371	1.20	15	208	1	60	HRU-1	--
HP-26	PEFY	H206 MEETING	12,000	13,500	371	1.20	15	208	1	60	HRU-1	--
HP-27	PFFY	H121 WORKSHOP 2	18,000	20,000	459	0.48	15	208	1	60	HRU-1	--

SELECTION BASED ON "MITSUBISHI". PROVIDE HARDWIRED T'STAT, REFRIGERANT SERVICE ISOLATION VALVES FOR EACH DCu, SYSTEM FLOW SELECTORS AND CONDENSATE PUMP. VRF SYSTEM SHALL BE FULLY CAPABLE OF SIMULTANEOUSLY HEATING AND COOLING EACH SPACE.

HEAT PUMP RECOVERY UNITS - OUTDOOR (VRF)

SYSTEM NO.	SYSTEM SERIES	SERVICE	SYSTEM TONS	SYSTEM HEATING	EER/IEER	COP	NO. OF MODULES	MODULE NO.	VOLT/PH.	MCA	MOP	REMARKS
HRU-1	PURY	HP-1 THRU 26	28	378	10.3/24.9	3.29	2	HRU-1A	460/3	26	40	
								HRU-1B	460/3	26	40	

SELECTION BASED ON "MITSUBISHI"

BRANCH CIRCUIT CONTROLLER

TAG NO.	MANUFACTURER MODEL NO.	LOCATION	ELECTRICAL DATA MCA	MOCP	VOLTS	PH	HZ	ASSOCIATED INDOOR UNITS	REMARKS
BCC-1	CMB-P1016NU-HA1	006 MECHANICAL	1.65	15	208	1	60	DCUe-1 - DCUe-14	MAIN BRANCH
BCC-2	CMB-P1016NU-HB1	ATTIC SPACE	1.46	15	208	1	60	DCUe-15 - DCUe-18	SUB BRANCH

SELECTION BASED ON "MITSUBISHI".

DUCTLESS COOLING UNIT SYSTEMS

UNIT NO.	MANUF. NO.	EVAP. LOCATION	COND. PUMP	EVAPORATOR UNTS CFM	EVAPORATOR UNTS COOLING BTUH	EVAPORATOR UNTS HEATING BTUH	ELECTRICAL DATA V	PH	MCA	ASSOCIATED CONDENSER	CONDENSER MODEL	ELECTRICAL DATA V	PH	MCA	MIN SEER @ ARI	REMARKS
DCUe-1	PKA	016A WORK ROOM	CP-1	320	12,000	14,000	208	1	1.0	DCUc-1	PUZ	208	1	11	20.8	
DCUe-2	PFFY	WORKSHOP 2	CP-1	494	24,000	27,000	208	1	0.59	DCUc-2	PUMY-P36	208	1	31	22.3	

SELECTION BASED ON "MITSUBISHI" PROVIDE WIRED T'STAT, LOW AMBIENT CONTROL AND INTERNAL MOUNTED CONDENSATE PUMP OF MODEL LISTED ABOVE. CFM BASED ON FANS SET AT LOW SPEED. PROVIDE WITH MATCHING AIR COOLED CONDENSING UNIT. ALL REFRIGERANT TUBING SHALL BE SIZED BY UNIT MANUFACTURER. PROVIDE ALL NECESSARY JOINT KITS, FITTINGS AND ACCESSORIES FOR A COMPLETE OPERATING SYSTEM PER MANUFACTURER'S RECOMMENDATIONS. PROVIDE BAS (BACNET) INTERFACE FOR INTEGRATION TO BMS SYSTEM. PROVIDE SERVICE ISOLATION VALVES FOR EACH INDOOR UNIT.

CONDENSATE PUMPS

UNIT NO.	MANUF. NO.	SERVICE	G.P.H.	T.D.H. FT WATER	MOTOR WATTS	MOTOR VOLT	MOTOR PH.	REMARKS
CP-1	SI-30	DCUe, HP, BCC	3.0	15.0	14	120	1	--
CP-2	VCMA-20	AHU-1	25	15.0	14	120	1	

SELECTION FOR CP-1 BASED ON "SAUERMANN."
SELECTION FOR CP-2 BASED ON "LITTLE GIANT."
PROVIDE OVERFLOW SAFETY SWITCH FOR EACH PUMP W/ ALARM, ALSO EACH PUMP SHALL BE FURNISHED WITH PROVISIONS FOR DIRECT CONNECTION(HARD WIRE) WITH PIGTAIL READY FOR CONNECTION BY ELECTRICAL CONTRACTOR.
PROVIDE CP-1 FOR EACH DCUe, HP AND BCC & INSTALL PER MANUFACTURER'S RECOMMENDATIONS CONCEALED ABOVE CEILINGS OR BEHIND ACCESS PANELS.

ELECTRIC HEATING COIL

UNIT NO.	DUCT SIZE	CFM	TOTAL KW	NO. OF STEPS	KW / STEP	POWER V	POWER PH	REMARKS
HC-1	10"x8"	1830	12.0	4	3.0	480	3	ERV-1
HC-2	10"x8"	1830	12.0	4	3.0	480	3	ERV-1
HC-3	16"x10"	295	2.0	4	0.5	480	3	ERV-2
HC-4	16"x10"	295	3.0	4	0.75	480	3	ERV-2

SELECTION BASED ON "S-MARK" OPEN COIL ELECTRIC DUCT HEATER. REFER TO FLOOR PLAN DRAWINGS FOR QUANTITIES AND LOCATIONS PROVIDE WITH MOUNTING BRACKET

UNIT HEATERS (ELECTRIC)

UNIT NO.	MANUF. SERIES	BUILDING LOCATION	C.F.M.	COIL KW	COIL MBH	POWER V	POWER A	POWER PH.	REMARKS
UH-1	BMI 914U	H102 CHILD'S LIBRARY	N/A	1.2	4.2	277	4.4	1	NOTE #1
UH-2	BMI 914U	H102 CHILD'S LIBRARY	N/A	1.2	4.2	277	4.4	1	NOTE #1
UH-3	HUHAA	H001 BSMNT STOR.	350	5.0	17.0	277	18.0	1	NOTE #2
UH-4	HUHAA	H001 BSMNT STOR.	350	5.0	17.0	277	18.0	1	NOTE #2
UH-5	CUH935	H002 STAIR	250	6.0	20.4	277	22.0	1	NOTE #2
UH-6	HUHAA	H004 MECHANICAL	350	5.0	17.0	277	18.0	1	NOTE #2
UH-7	HUHAA	H003 BSMT STOR.	350	5.0	17.0	277	18.0	1	NOTE #2
UH-8	NOT USED	--	--	--	--	--	--	--	--
UH-9	NOTE #2	H102 CHILD. LIBRARY	N/A	1.6	5.5	120	7.0	1	NOTE #3
UH-10	NOTE #2	H102 CHILD. LIBRARY	N/A	1.6	5.5	120	7.0	1	NOTE #3
UH-11	NOTE #2	H102 CHILD. LIBRARY	N/A	1.6	5.5	120	7.0	1	NOTE #3
UH-12	NOTE #2	H102 CHILD. LIBRARY	N/A	1.6	5.5	120	7.0	1	NOTE #3
UH-13	NOTE #2	H102 CHILD. LIBRARY	N/A	1.6	5.5	120	7.0	1	NOTE #3
UH-14	CUH935	H107 VESTIBULE	250	6.0	20.4	277	22.0	1	NOTE #2
UH-15	CUH935	H119 STAIR	250	6.0	20.4	277	22.0	1	NOTE #2
UH-16	HUHAA	ATTIC	650	10.0	34.1	480	12.0	3	NOTE #2
UH-17	HUHAA	ATTIC	650	10.0	34.1	480	12.0	3	NOTE #2
UH-18	HUHAA	ATTIC	650	10.0	34.1	480	12.0	3	NOTE #2
UH-19	COS-E-IF	H106 FAMILY TOILET	N/A	,750	2.6	120	6.3	1	NOTE #2, 4
UH-20	COS-E-IF	H105 FAMILY TOILET	N/A	,750	2.6	120	6.3	1	NOTE #2, 4
UH-21	COS-E-IF	H117 TOILET	N/A	,750	2.6	120	6.3	1	NOTE #2, 4
UH-22	COS-E-IF	H116 TOILET	N/A	,750	2.6	120	6.3	1	NOTE #2, 4
UH-23	COS-E-IF	H208 TOILET	N/A	,750	2.6	120	6.3	1	NOTE #2, 4
UH-24	COS-E-IF	H209 TOILET	N/A	,750	2.6	120	6.3	1	NOTE #2, 4

NOTE #1: SELECTION BASED ON "INDEECO"
NOTE #2: SELECTION BASED ON "BERKO"
NOTE #3: SELECTION BASED "KAMPMANN"
NOTE #4: PROVIDE WITH MANUFACTURER'S BACK BOX ONLY.

LEGEND

SYMBOL	ABBREV	DESCRIPTION
Ø	DIA	DIAMETER
	HHWS	HEATING HOT WATER SUPPLY
	HHWR	HEATING HOT WATER RETURN
	RL	REFRIGERANT LIQUID
	RS	REFRIGERANT SUCTION
	D	DRAIN
		GATE VALVE
		GLOBE VALVE
		CHECK VALVE
		BUTTERFLY VALVE
		BALL VALVE
		THREE-WAY CONTROL VALVE
		TWO-WAY CONTROL VALVE
		FLOW METERING ELEMENT
		CIRCUIT SETTER VALVE
		TRIPLE DUTY VALVE
		DRAIN VALVE
		PLUG VALVE
		SAFETY VALVE
		STRAINER
		UNION
		AUTOMATIC AIR VENT W/ BALL VALVE
		PIPE UP (ELBOW)
		PIPE DOWN (ELBOW)
		PRESSURE GAGE WITH BALL VALVE
		THERMOMETER
		BRANCH CONNECTION OUT OF TOP
		BRANCH CONNECTION OUT OF BOTTOM
		BRANCH CONNECTION OUT OF SIDE
		CAP ON END OF PIPE
		FLOW IN DIRECTION OF ARROW
		ACOUSTICAL LINED DUCTWORK
T		THERMOSTAT
TYPE / NECK SIZE / CFM		SUPPLY DIFFUSER SCHEDULE NO.
		RETURN REGISTER/GRILLE SCHEDULE NO.
		EXHAUST REGISTER/GRILLE SCHEDULE NO.
		SUPPLY AIR DUCT SECTION
		RETURN/EXHAUST AIR DUCT SECTION
		SUPPLY AIR
		RETURN/EXHAUST AIR
	MD	MOTORIZED DAMPER
	FD	FIRE DAMPER
	VD	VOLUME DAMPER
	BD	BACKDRAFT DAMPER
S		SMOKE DETECTOR
CO2		CO2 SENSOR
# / #		EQUIPMENT TAG
CO2		CARBON DIOXIDE SENSOR

ABBREV	DESCRIPTION
TYP.	TYPICAL
ET	EXPANSION TANK
A.H.U.	AIR HANDLING UNIT
EF	EXHAUST FAN
UH	UNIT HEATER (CABINET OR HORIZONTAL)
H	HUMIDIFIER
O.A.	OUTSIDE AIR
CFM	CUBIC FEET PER MINUTE
VEL	VELOCITY
E.A.T.	ENTERING AIR TEMPERATURE
L.A.T.	LEAVING AIR TEMPERATURE
E.D.B.	ENTERING DRY BULB
E.W.B.	ENTERING WET BULB
L.D.B.	LEAVING DRY BULB
L.W.B.	LEAVING WET BULB
E.W.T.	ENTERING WATER TEMPERATURE
L.W.T.	LEAVING WATER TEMPERATURE
T.S.P.	TOTAL STATIC PRESSURE
E.S.P.	EXTERNAL STATIC PRESSURE
T.D.H.	TOTAL DYNAMIC HEAD
P.D.	PRESSURE DROP
HP	HORSEPOWER
V	VOLTS
PH	PHASE
MANUF	MANUFACTURER
A.F.F.	ABOVE FINISHED FLOOR
DG	DOOR GRILLE
U.D.	UNDERCUT DOOR
N.T.S.	NOT TO SCALE
H.V.A.C.	HEATING,VENTILATING AND AIR COND.
A.T.C.	AUTOMATIC TEMP. CONTROL
G.C.	GENERAL CONTRACTOR
P.C.	PLUMBING CONTRACTOR
P	PUMP
DCU	DUCTLESS COMPUTER ROOM UNIT
B	BOILER
VIF	VERIFY IN FIELD
BT	BUFFER TANK
S/W	SUMMER/WINTER
DTWS	DUAL TEMP WATER SUPPLY
DTWR	DUAL TEMP WATER RETURN
RTU	ROOF TOP UNIT
IU	INDUCTION UNIT
BP	BOILER PUMP
FPM	FEET PER MINUTE
LVG	LEAVING
ENT	ENTERING
PRESS	PRESSURE
MBH	BRITISH THERMAL UNIT PER HOUR (1000)
SENS	SENSIBLE
No	NUMBER
COMP	COMPRESSOR
CYL	CYLINDER
VF	VARIABLE FREQUENCY
SP	STATIC PRESSURE
IN. WAT.	INCHES OF WATER
QTY	QUANTITY
DIA	DIAMETER
MCA	MINIMUM CIRCUIT AMPACITY
HTNG	HEATING
TDH	TOTAL DYNAMIC HEAD
AWT	AVERAGE WATER TEMPERATURE
FT	FOOT
BTUH	BRITISH THERMAL UNIT PER HOUR
WPD	WATER PRESSURE DROP
GR/LB	GRAINS PER POUND
CO2	CARBON DIOXIDE
APD	AIR PRESSURE DROP
CFH	CUBIC FEET PER HOUR
CP	CONDENSATE PUMP
DCUc	DUCTLESS COOLING UNIT CONDENSER
DCUe	DUCTLESS COOLING UNIT EVAPORATOR
SYST	SYSTEM
SA	SOUND ATTENUATOR OR SUPPLY AIR
Hz	HERTZ
RA	RETURN AIR

GENERAL NOTES

1. ALL PIPING AND DUCTWORK UNLESS DIMENSIONED IS SHOWN DIAGRAMMATICALLY ONLY. EXACT LOCATION SHALL BE DETERMINED IN FIELD AFTER COORDINATING WITH OTHER WORK.
2. FOR TYPICAL PIPING DIAGRAMS AND CONNECTIONS AT EQUIPMENT, SEE DETAIL DRAWINGS.
3. EXACT LOCATION OF ALL CEILING DIFFUSERS, REGISTERS, AND GRILLES SHALL BE COORDINATED WITH LIGHTING FIXTURES. REFER TO REFLECTED CEILING PLAN.
4. FOR DETAILS OF ROOF CURBS, FLASHING, PIPING, AND VENTS THRU ROOF REFER TO ARCHITECTURAL DRAWINGS.
5. FOR LOCATION OF OPENINGS IN ROOF AND FLOORS REFER TO STRUCTURAL AND ARCHITECTURAL DRAWINGS. PROVIDE TO SUIT EQUIPMENT.
6. AUTOMATIC VENTS, VALVES, ETC. THAT MUST BE SERVICED SHALL BE LOCATED IN ACCESSIBLE POSITIONS.
7. GENERAL CONTRACTOR SHALL PROVIDE CONCRETE BASES AT 4" MINIMUM HEIGHT. LOCATION AND DIMENSIONS ARE APPROXIMATE.
8. THE CONTRACTOR SHALL PROVIDE REMOVABLE PANELS AT LOCATIONS WHERE ACCESS TO VALVES, DAMPERS, FIRE DAMPERS, ETC. ARE REQUIRED.
9. ALL DUCTWORK SHALL HAVE JOINTS AND SEAMS FILLED WITH SEALANT FOR AIR TIGHT INSTALLATIONS.
10. PROVIDE SWING JOINTS AT ALL PIPING TAKEOFFS FROM MAINS (MINIMUM OF 3 ELBOWS).
11. ALL AIR VENTS SHALL BE INSTALLED WITH COCKS SUCH THAT VENTS CAN BE REMOVED WITHOUT DRAINING SUPPLY AND RETURN MAINS.
12. PROVIDE DUCT ACCESS DOORS FOR ALL FIRE AND CONTROL DAMPERS LOCATED IN DUCTWORK RUNS.
13. H.V.A.C. CONTRACTOR SHALL COORDINATE ALL WORK WITH PLUMBING AND ELECTRICAL CONTRACTORS.
14. H.V.A.C. CONTRACTOR SHALL INFORM G.C. AS TO THE LOCATION AND SIZE OF ALL ACCESS PANELS. COORDINATE W/ ARCHITECT PRIOR TO FINALIZING LOCATION(S).
15. ALL DOOR GRILLES SHALL BE BY G.C.
16. ALL SUPPORT STEEL UNLESS SHOWN ON STRUCTURAL DRAWINGS SHALL BE PROVIDED BY H.V.A.C. CONTRACTOR.
17. ALL DUCT ELBOWS SHALL BE LONG RADIUS (R=1.5), OR SQUARE TYPE WITH DOUBLE THICKNESS TURNING VANES.
18. DUCT SMOKE DETECTORS INDICATED ARE TO BE PROVIDED & WIRED BY ELECTRICAL CONTRACTOR AND INSTALLED BY THIS CONTRACTOR.
19. FOR ALL CONNECTIONS TO BUILDING STEEL REFER TO STRUCTURAL DRAWINGS.
20. TOTAL DYNAMIC HEAD AND STATIC PRESSURE INDICATED IN THE SCHEDULES IS BASED ON ENGINEERING ANALYSIS AND MAY NOT NECESSARILY MATCH ACTUAL INSTALLED CONDITIONS. THIS CONTRACTOR SHALL PROVIDE REQUIRED SHEAVES, BELTS AND DRIVES TO MEET VOLUME FLOW CHARACTERISTICS SPECIFIED.
21. PROVIDE 4" FLEXIBLE CONNECTION AT EACH DUCT CONNECTION TO FAN OR AIR HANDLING UNIT.
22. THE MANUFACTURER LISTED IN THE SCHEDULES REFLECTS THE BASIS OF DESIGN AS INDICATED ON THE CONTRACT DRAWINGS AND IS NOT INTENDED TO SUGGEST THE REQUIRED PROVIDER. REFER TO THE SPECIFICATIONS FOR A COMPLETE DESCRIPTION OF EACH PRODUCT REQUIRED AND REFERENCE "OR EQUAL SUBSTITUTION" REQUIREMENTS.
23. PROVIDE ISOLATION VALVES ON ALL BRANCH PIPING WHICH SERVES TWO OR MORE TERMINAL HEATING AND/OR COOLING UNITS.
24. FINTUBE LENGTHS INDICATED ARE GROSS FINNED ELEMENT REQUIRED FOR THE ROOM. PROVIDE PIPING OFFSETS AND BLANK COVERS AROUND SUPPLEMENTAL STRUCTURES.
25. COORDINATE WITH SUPPLEMENTAL STRUCTURES IN WALL WHERE PIPING IS RUN INSIDE STUD CAVITIES ON THE WARM SIDE OF THE INSULATION. PROVIDE OPENINGS THROUGH WALL STUDS SO THE INSULATION CAN BE CARRIED FULL SIZE THROUGH THE STUD.

JOHNSON ROBERTS ASSOCIATES INC.
ARCHITECTS
15 PROPERZI WAY
SOMERVILLE, MA
01243 - 3228

GARCIA-GALUSKA-DESOUSA
CONSULTING ENGINEERS INC.
370 FAUNCE CORNER ROAD, DARTMOUTH, MA 02747-1217
508-998-5700 • FAX 508-998-0883 • E-MAIL info@g-g-d.com

Revisions:

CONCORD FREE PUBLIC LIBRARY EXPANSION
CONCORD, MA

Sheet Title:
Schedules - HVAC

Date: 24-Oct-19 Drawn By: RLP
Scale: 1/8"=1'-0" Project No.: 1714

M3.1

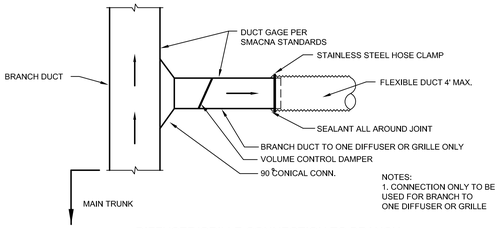

NOTES:
1. CONNECTION ONLY TO BE USED FOR BRANCH TO ONE DIFFUSER OR GRILLE

DIFFUSER/GRILLE CONNECTION TO BRANCH
(NOT TO SCALE)

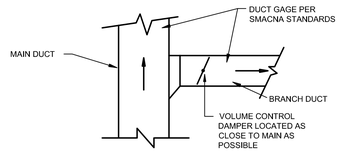

BRANCH DUCT CONNECTION TO MAIN
(NOT TO SCALE)

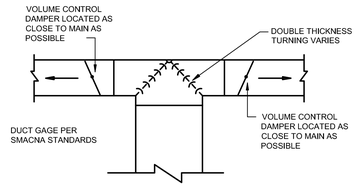

TYPICAL TEE DUCT CONNECTION
(NOT TO SCALE)

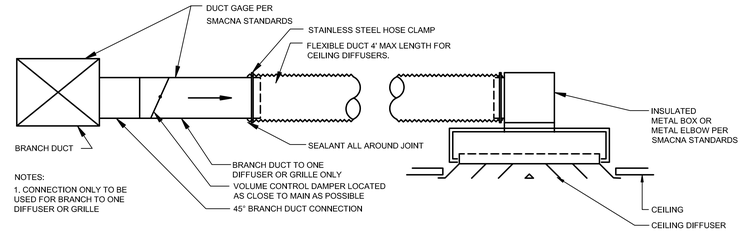

NOTES:
1. CONNECTION ONLY TO BE USED FOR BRANCH TO ONE DIFFUSER OR GRILLE

DIFFUSER/GRILLE CONNECTION TO BRANCH
(NOT TO SCALE)

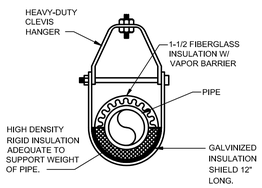

TYPICAL PIPE HANGER DETAIL

NOTE:
REFER TO SPECIFICATIONS FOR HANGER ROD SIZE & SPACING.
REFER TO SPEC FOR SEISMIC & VIBRATION ISOLATION REQUIREMENTS.

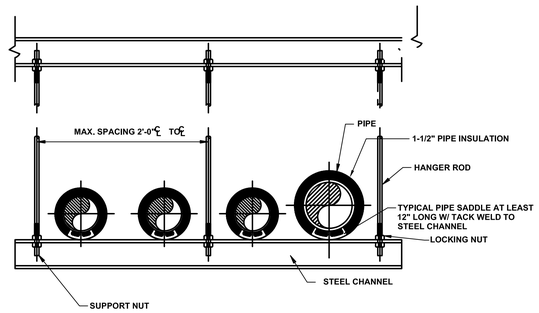

(NOT TO SCALE)

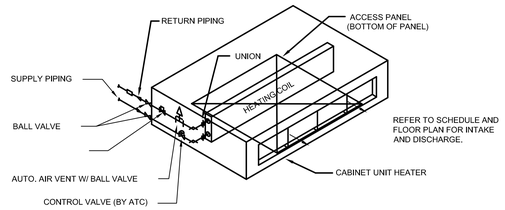

TYPICAL CABINET UNIT HEATER
CEILING TYPE-PIPING DETAIL-HOT WATER
(NOT TO SCALE)

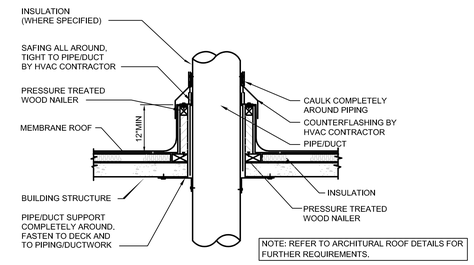

NOTE: REFER TO ARCHITURAL ROOF DETAILS FOR FURTHER REQUIREMENTS.

PIPE / DUCT PENETRATION THROUGH ROOF DETAIL
(NOT TO SCALE)

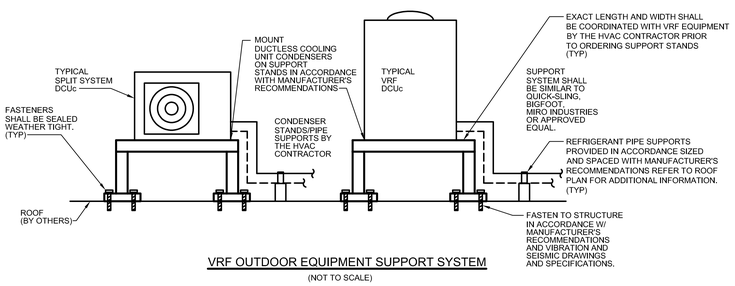

VRF OUTDOOR EQUIPMENT SUPPORT SYSTEM
(NOT TO SCALE)

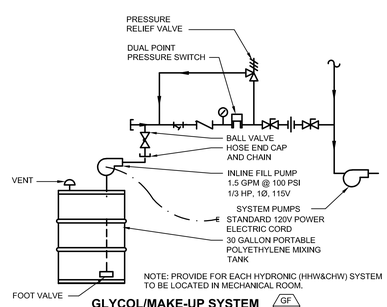

NOTE: PROVIDE FOR EACH HYDRONIC (HHW&CHW) SYSTEM TO BE LOCATED IN MECHANICAL ROOM.

GLYCOL/MAKE-UP SYSTEM GF 1
(NOT TO SCALE)

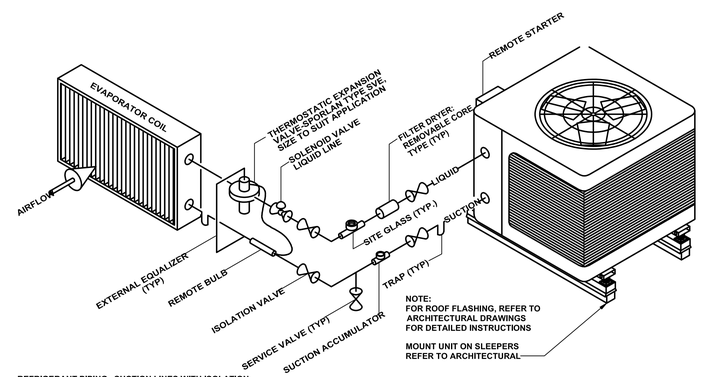

REFRIGERANT PIPING: SUCTION LINES WITH ISOLATION VALVE, SUCTION ACCUMULATOR AND CHARGING CONNECTION. LIQUID LINE WITH SITE GLASS HAVING DOUBLE PORTS WITH CAPS, FILTER DRYER, ISOLATION VALVES AND CHARGING CONNECTION. INSULATE PER SPECIFICATIONS.
COVER ALL REFRIGERANT PIPING WITH ULTRA VIOLET PROTECTED PVC COVERING (COLOR= GRAY)

NOTE:
FOR ROOF FLASHING, REFER TO ARCHITECTURAL DRAWINGS FOR DETAILED INSTRUCTIONS

MOUNT UNIT ON SLEEPERS REFER TO ARCHITECTURAL

(NOT TO SCALE)

PIPING INDICATED IS FOR SINGLE CIRCUIT; CONTRACTOR SHALL PIPE UNITS WITH MULTIPLE CIRCUITS (AND HOT GAS BYPASS CIRCUIT WHERE SPECIFIED) IN SIMILAR MANNER IN ACCORDANCE WITH MANUFACTURE'S RECOMMENDATIONS AND GUIDELINE REQUIREMENTS.

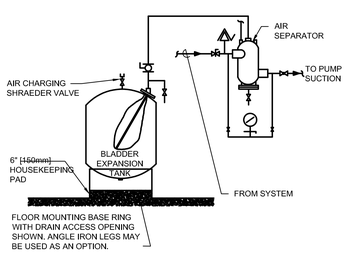

EXPANSION TANK DETAIL
NOT TO SCALE

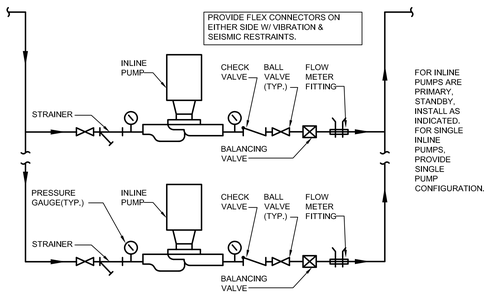

INLINE PUMP DETAIL
(NOT TO SCALE)

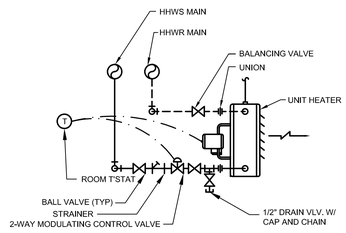

TYPICAL HORIZONTAL UNIT HEATER PIPING DETAIL-HEATING-HOT WATER
(NOT TO SCALE)

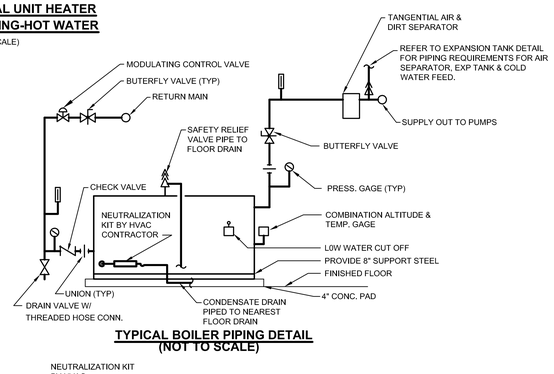

TYPICAL BOILER PIPING DETAIL
(NOT TO SCALE)

NEUTRALIZATION KIT BY HVAC CONTRACTOR

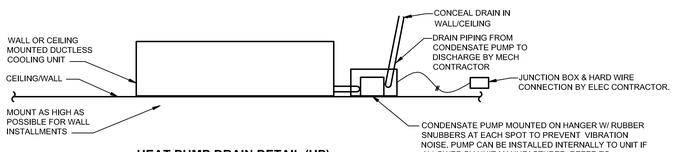

HEAT PUMP DRAIN DETAIL (HP)
(NOT TO SCALE)

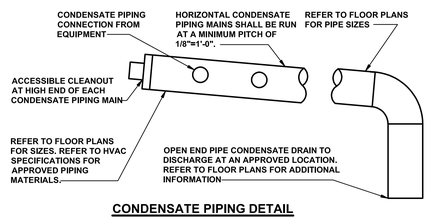

CONDENSATE PIPING DETAIL
(NOT TO SCALE)

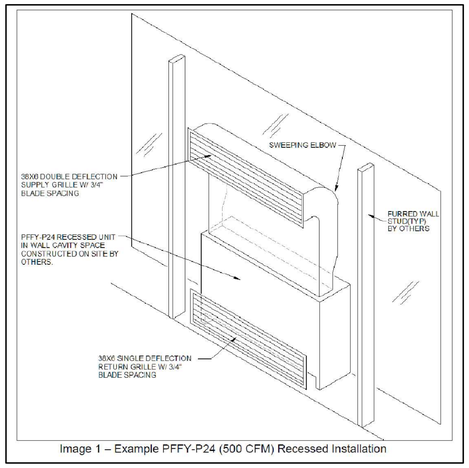

Image 1 – Example PFFY-P24 (500 CFM) Recessed Installation

JOHNSON ROBERTS ASSOCIATES INC.
ARCHITECTS
15 PROPERZI WAY
SOMERVILLE, MA
01243 - 3228

GARCIA-GALUSKA-DESOUSA
CONSULTING ENGINEERS INC.
370 FAUNCE CORNER ROAD, DARTMOUTH, MA 02747-1217
508-998-5700 • FAX 508-998-0883 • E-MAIL info@g-g-d.com

Revisions:

CONCORD FREE PUBLIC LIBRARY EXPANSION
CONCORD, MA

Sheet Title:
DETAILS - HVAC

Date: 24-Oct-19 Drawn By: RLP
Scale: 1/8"=1'-0" Project No.: 1714

M3.2

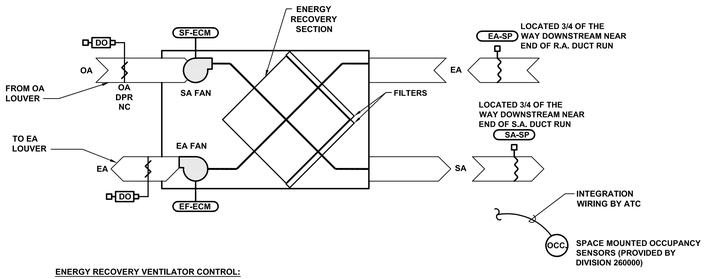

ENERGY RECOVERY VENTILATOR CONTROL:

A DDC CONTROLLER USING ELECTRIC ACTUATION CONTROLS THE UNIT OPERATION AS FOLLOWS:

RUN CONDITIONS - SCHEDULES:

THE UNIT SHALL RUN ACCORDING TO SPACE MOUNTED OCCUPANCY SENSORS (PROVIDED BY DIVISION 260000):

- OCCUPIED MODE: WHEN ANY SPACE IS DETERMINED OCCUPIED PER THE SPACE MOUNTED OCCUPANCY SENSORS, THE UNIT SHALL RUN AT THE DESIGN VENTILATION AIR FLOW.

- UNOCCUPIED MODE (NIGHT SETBACK): WHEN ALL SPACES ARE DETERMINED TO BE UNOCCUPIED PER THE SPACE MOUNTED OCCUPANCY SENSORS, THE UNIT SHALL RUN AT LOW FAN SPEED MINIMUM FLOW.

FANS:

THE FAN SHALL RUN AT ALL TIMES BETWEEN HIGH AND LOW SPEED AS CONTROLLED BY THE UNIT SA & EA FAN ECM MOTORS AND STATIC PRESSURE SENSORS BASED ON OCCUPANCY SENSORS AS OUTLINED ABOVE.

ENERGY RECOVERY UNIT (ERV-1 & 2)	AI	AO	DI	DO	ALARM	REMARKS
SUPPLY FAN S/S & STATUS		X	X	X	X	
EXHAUST FAN S/S & STATUS		X	X	X	X	
OA & EA DAMPER POS. (EACH)			X	X	X	PROVIDE DAMPER END SWITCHES
SA & EA PRESSURE SENSOR (EACH)	X					
FILTER STATUS			X		X	

MISCELLANEOUS BMS POINTS	BUILDING LOCATION	AI	AO	DI	DO	ALARM	REMARKS
RECIRC. PUMP RP-1	BASEMENT	X				X	NOTE #1 & #3
STORM WATER PUMP ST-1	H003 BASEMENT STORAGE	X				X	NOTE #1
MAIN ELECTRIC METER SERVICE		X					NOTE #2

NOTE #1. COORDINATE TYPE OF SENSORS METERS OR EQUIPMENT W/ DIVISION 22 00 00 CONTRACTOR. ATC CONTRACTOR TO PROVIDE ALL CONTROL WIRING, RELAYS, PROGRAMMING, GRAPHICS, & BMS INTERFACE FOR MONITORING & ENERGY USAGE.

NOTE #2. COORDINATE TYPE OF SENSORS METERS OR EQUIPMENT W/ DIVISION 26 00 00 CONTRACTOR. ATC CONTRACTOR TO PROVIDE ALL CONTROL WIRING, RELAYS, PROGRAMMING, GRAPHICS, & BMS INTERFACE FOR MONITORING & ENERGY USAGE.

NOTE #3. COORDINATE EQUIPMENT W/ DIVISION 220000 CONTRACTOR. ATC CONTRACTOR TO PROVIDE ALL CONTROL WIRING, RELAYS, PROGRAMMING, GRAPHICS , & BMS INTERFACE FOR MONITORING & CONTROL OF ASSOCIATED EQUIP.

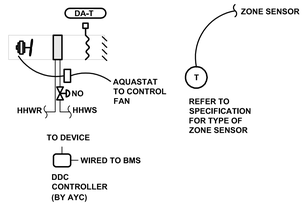

UNIT HEATER CONTROL:

A DDC CONTROLLER USING ELECTRIC ACTUATION CONTROLS THE UNIT OPERATION AS FOLLOWS:

RUN CONDITIONS - SCHEDULED:
THE UNIT SHALL RUN ACCORDING TO A USER DEFINABLE TIME SCHEDULE IN THE FOLLOWING MODES:

- OCCUPIED MODE: THE UNIT SHALL MAINTAIN A HEATING SETPOINT OF 68°F (ADJ.).
- UNOCCUPIED MODE (NIGHT SETBACK): THE UNIT SHALL MAINTAIN A HEATING SETPOINT OF 55°F (ADJ.).

FAN:
THE FAN SHALL RUN ANYTIME THE AQUASTAT SENSES WATER TEMPERATURE IS ABOVE 90°F (ADJ) UNLESS SHUTDOWN ON SAFETIES.

HEATING COIL VALVE:
THE CONTROLLER SHALL MEASURE THE ZONE TEMPERATURE AND OPEN/CLOSE THE HEATING COIL VALVE TO MAINTAIN ITS HEATING SETPOINT.

THE HEATING SHALL BE ENABLED WHENEVER:

- OUTSIDE AIR TEMPERATURE IS LESS THAN 65°F (ADJ.).
- AND THE ZONE TEMPERATURE IS BELOW HEATING SETPOINT.

SUMMER OPERATIONS:

- THE FAN IS OFF
- AND THE CONTROL VALVE IS CLOSED

CABINET UNIT HEATER	AI	AO	BI	BO	AV	BV	LOOP	SCHED	TREND	ALARM	REMARKS
ZONE TEMP	X									X	
HEATING VALVE		X							X		
HEATING SETPOINT								X			

ALL CONDENSATE DRAIN PANS ASSOCIATED WITH DCU'S TO BE PROVIDED WITH EQUIPMENT MANUFACTURER'S OVERFLOW SENSORS WHICH ARE TO BE INTERLOCKED WITH THE AUTOMATIC TERMPERATURE CONTROL SYSTEM FOR MONITORING ONLY. PROVIDE ROOM TEMPERATURE AND HIGH/LOW TEMPERATURE ALARM AND HIGH LEVEL CONDENSATE ALARM POINTS.

PROVIDE EVAPORATOR UNIT START/STOP/STATUS/TEMP CONTROL POINTS VIA DCU SYSTEM CONTROLLER.

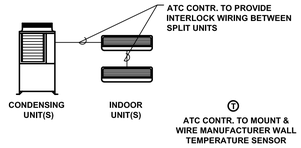

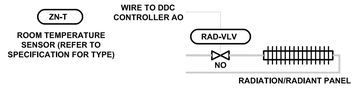

DDC SIDE LOOP CONTROL
WIRE TO NEAREST DDC CONTROLLER
TYPICAL FOR 1

RADIATION AND RADIANT PANEL CONTROL

EACH SPACE SHALL HAVE A HOT WATER CONTROL VALVE AND THERMOSTAT THAT IS NETWORKED TO THE BUILDING ATC SYSTEM WHICH WILL HAVE THE CAPABILITY OF SCHEDULING THE OCCUPIED AND UNOCCUPIED TIME PERIODS FOR EACH SPACE. DURING THE OCCUPIED PERIOD THE SPACE TEMPERATURE SHALL BE 70°F (ADJ.). DURING THE UNOCCUPIED PERIOD, EACH ROOM SHALL BE SET BACK TO 60°F. (ADJUSTABLE).

(TYPICAL FOR ALL PASSIVE RADIATION HEATING CONTROL.)

RADIATION	AI	AO	DI	DO	ALARM
SPACE TEMP.	X				X
HHW COIL VALVE		X			

EXHAUST FAN CONTROL:

REFER TO DRAWINGS AND SCHEDULES FOR TYPE OF CONTROL REQUIRED FOR EACH FAN. ALL MOTOR OPERATED DAMPERS SHALL BE PROVIDED AND WIRED BY THIS CONTRACTOR TO OPERATE AS SEQUENCED BELOW. THESE DAMPERS SHALL ALSO BE PROVIDED WITH END SWITCHES TO CONFIRM DAMPER POSITION. UPON RECEIVING A SIGNAL THE DAMPER WILL OPEN, ONCE THE END SWITCH MAKES CONTACT THE FAN WILL START. (TYPICAL FOR ALL FANS WITH MOTORIZED DAMPERS.) ATC CONTRACTOR SHALL REFER TO EXHAUST FAN SCHEDULE FOR ALL DIRECT DRIVE FANS WITH ECM (GREENHECK VARI-GREEN OR EQUAL) MOTORS. ATC CONTRACTOR SHALL PROVIDE SPEED CONTROL SIGNAL POINT (0-10V - COORDINATED W/ MFGR) AND ASSOCIATED WIRING FROM FAN TO BMS SYSTEM.

1. TYPE 1: EXHAUST FAN IS CONNECTED TO SWITCH W/ PILOT LIGHT. SWITCH W/ PILOT LIGHT SHALL BE MOUNTED ADJACENT TO CONNECTED EQUIPMENT, PROVIDED BY DIVISION 230000, WIRED BY DIVISION 260000.

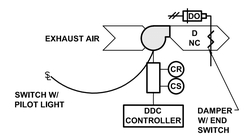

EXHAUST FAN - TYPE 4 CONTROLS

EXHAUST FANS (EF)	AI	AO	DI	DO	ALARM	REMARKS
FAN S/S & STATUS			X	X	X	ALL TYPES
EA DAMPER			X	X	X	ALL TYPES

ABBREVIATIONS

ALM	ALARM
AQ	AQUASTAT
ATC	AUTOMATIC TEMPERATURE CONTROLS
BLDG	BUILDING
BMS	BUILDING MANAGEMENT SYSTEM (ENERGY & AUTOMATION)
CONTR	CONTROLLER
CO2	CARBON DIOXIDE
CR	CONTROL RELAY
CS	CURRENT SENSOR
CUV	CABINET UNIT VENTILATOR
D	DAMPER
DA	DISCHARGE AIR
DAS	DISCHARGE AIR SENSOR
DCW	DOMESTIC COLD WATER
DHW	DOMESTIC HOT WATER
DDC	DIRECT DIGITAL CONTROL
DO	DAMPER OPERATOR
DP	DIFFERENTIAL PRESSURE
DPR	DAMPER
DPV	DIFFERENTIAL PRESSURE VALVE
EA	EXHAUST AIR
EF	EXHAUST FAN
F	FLOW/FARENHEIT (AS APPLICABLE)
FB	FACE & BYPASS
FD	FIRE DAMPER
H	HUMIDITY
HT	HIGH TEMPERATURE
HTG	HEATING
HR	HEAT RECOVERY
HWR	HOT WATER RETURN
HWS	HOT WATER SUPPLY
LT	LOW TEMPERATURE
M	MOTOR
MAT	MIXED AIR TEMPERATURE
NAC	NETWORK APPLICATION CONTROLLER
NC	NORMALLY CLOSED
NO	NORMALLY OPEN
OA	OUTSIDE AIR
OVR	OVERRIDE
P	PRESSURE
PB	PUSH BUTTON
PNL	PANEL
RA	RETURN AIR
REL	RELIEF AIR
RF	RETURN FAN
RFC	RETURN FAN CONTROLLER
RM	ROOM
SA	SUPPLY AIR
SD	SMOKE DAMPER OR SMOKE DETECTOR
SF	SUPPLY FAN
SFC	SUPPLY FAN CONTROLLER
SP	STATIC PRESSURE
T	TEMPERATURE
TEC	TERMINAL EQUIPMENT CONTROLLER
VAC	VOLTS - ALTERNATING CURRENT
VDC	VOLTS - DIRECT CURRENT
VFD	SEE VSD
VLV	VALVE
VP	VELOCITY PROBE (AIRFLOW)
VSD	VARIABLE SPEED (FREQUENCY) DRIVE
WS	WINDOW STRIKE
XFMR	TRANSFORMER

ATC/BMS GENERAL NOTES

1. ALL SETPOINTS INDICATED IN THE SEQUENCE OF OPERATIONS SHALL BE ADJUSTABLE.
2. THE CONTROL POINTS LISTED IN THE SUMMARY MATRIX ARE THE MINIMUM CONTROL POINTS REQUIRED. ATC CONTRACTOR SHALL PROVIDE ALL CONTROL POINTS AS REQUIRED FOR COMPLETE SYSTEM CONTROL PER THE SEQUENCE OF OPERATIONS.
3. ALL CONTROL WIRING, SENSORS, RELAYS, CONTROLLERS, PANELS, DAMPERS, ACTUATORS, ETC. INDICATED ON THE CONTROL DIAGRAMS SHALL BE PROVIDED BY THE ATC CONTRACTOR UNLESS NOTED OTHERWISE.
4. ALL HHW VALVES SHALL BE FAIL OPEN ON LOSS OF POWER.
5. ALL HHW WATER VALVES SHALL BE MODULATING TYPE FOR GPM > 1; 2-POSITION ACCEPTABLE FOR FLOWS < 1 GPM
6. ATC CONTRACTOR TO COORDINATE W/ OWNER FOR ALL COMMUNICATION & INTERFACE REQUIREMENTS TO CENTRAL OPERATING STATION. REFER TO SPEC FOR FURTHER INFO.
7. ALL ATC CONTROLS SHALL BE POWER WIRED FROM THE MAIN ATC PANEL WITHIN THE MECHANICAL ROOM. THIS MAIN SHALL BE PROVIDED WITH 24 HOUR BATTERY BACKUP PROVIDED BY THE ATC CONTRACTOR AND CONTROLS SHALL BE FED BY THIS MAIN ATC PANEL OR SUB ATC PANEL & NOT THROUGH THE UNIT'S MAIN POWER SOURCE.

JOHNSON ROBERTS ASSOCIATES INC.
ARCHITECTS
15 PROPERZI WAY
SOMERVILLE, MA
01243 - 3228

GARCIA-GALUSKA-DESOUSA
CONSULTING ENGINEERS INC.
370 FAUNCE CORNER ROAD, DARTMOUTH, MA 02747-1217
508-998-5700 • FAX 508-998-0883 • E-MAIL info@g-g-d.com

Concord Free Library

DIAGRAM SYMBOL LEGEND		CONT.No	PAGE
DISPLAY	DESCRIPTION		
	POWER WIRE		
	CONTROL WIRE		
	REF. PIPE		

VRF SYSTEM SCHEMATIC DWG.

Additional refrigerant charge is needed depending on the size and length of extended piping. Please refer the amount of pre-charge and the formula of calculation which is mentioned on the data book.
1.25mm(16 AWG) : 1.25mm²(16 AWG) or more. 0.75mm²(20 AWG) : between 0.5mm²(24 AWG) and 0.75mm²(20 AWG).

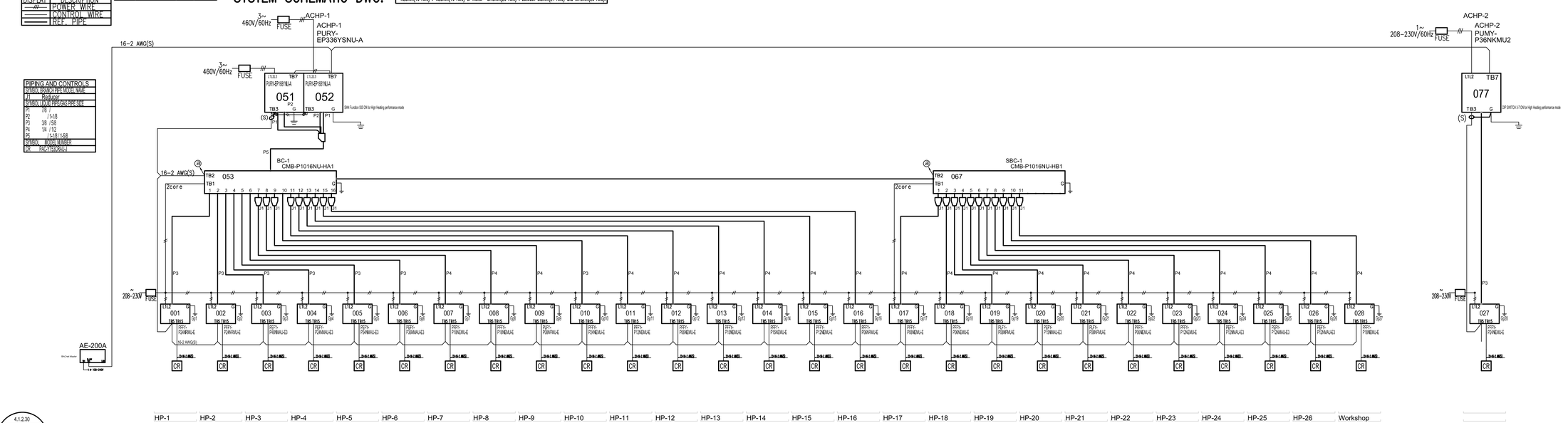

4.1.2.30
Mitsubishi Electric
Diamond System Builder
10/18/2019
2:08 PM

REMARKS
Originator: Mike Gagner
Comments:

Revisions:

CONCORD FREE PUBLIC LIBRARY EXPANSION
CONCORD, MA

Sheet Title:
Controls I - HVAC

Date: 24-Oct-19 Drawn By: RLP
Scale: 1/8"=1'-0" Project No.: 1714

M4.1

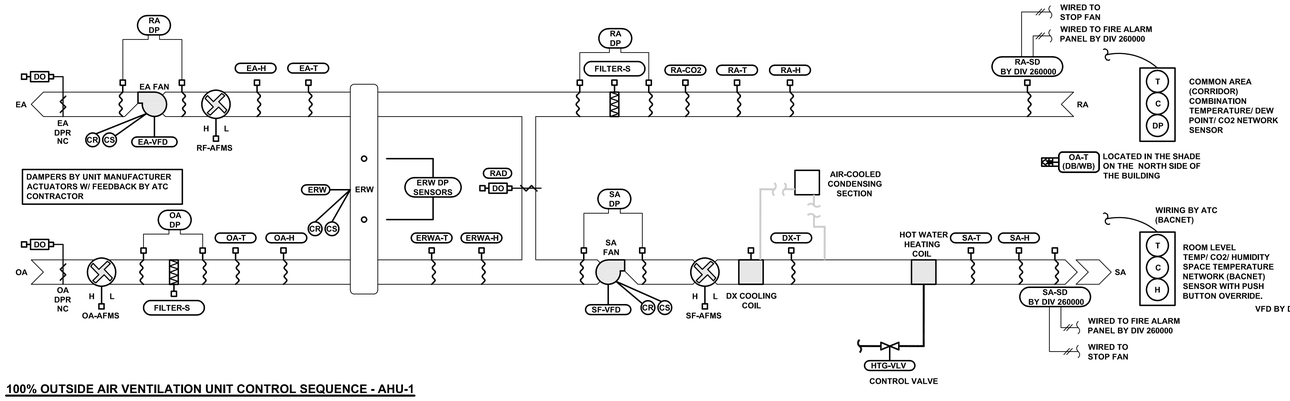

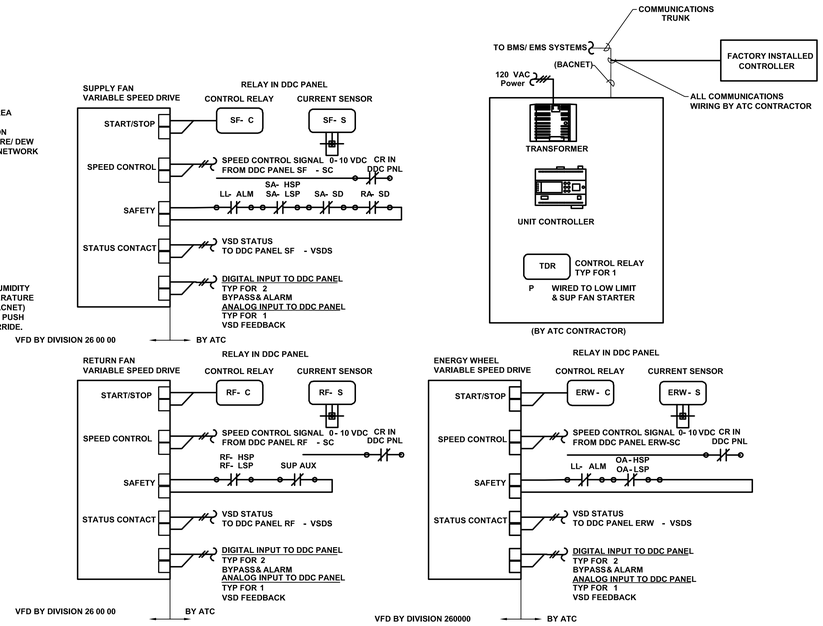

100% OUTSIDE AIR VENTILATION UNIT CONTROL SEQUENCE - AHU-1

A DDC CONTROLLER USING ELECTRIC ACTUATION CONTROLS THE AIR HANDLING UNIT OPERATION AS FOLLOWS:

RUN CONDITIONS - SCHEDULED:
THE UNIT SHALL RUN BASED UPON AN OPERATOR ADJUSTABLE SCHEDULE. THE UNIT SHALL RUN WHEN THE ISOLATION DAMPERS ARE PROVEN OPEN.

OCCUPIED MODE:

THE FANS START OR CONTINUE TO RUN AND THE UNIT IS CONTROLLED AS FOLLOWS:

THE SUPPLY AND EXHAUST FAN SHALL RUN CONTINUOUSLY. THE OUTSIDE AND EXHAUST AIR DAMPERS SHALL BE OPEN AND RE-CIRC DAMPERS SHALL BE CLOSED. THE CO2 SENSOR LOCATED IN THE RETURN DUCTWORK SHALL BE FOR MONITORING AND TRENDING. THE ENERGY RECOVERY WHEEL SHALL OPERATE BASED ON DESCRIPTION BELOW.

THE DIRECT EXPANSION COIL CONTROL VALVE SHALL MODULATE TO DEHUMIDIFY THE INCOMING AIR. THE HOT GAS REHEAT VALVE SHALL MODULATE TO REHEAT THE SUB COOLER SUPPLY AIR FROM THE DX COIL TO 65°F (ADJ SUMMER), THE HOT WATER VAVLE SHALL MODULATE AS REQUIRED TO PROVIDED ADDITIONAL HEAT TO THE SUPPLY AIR TO MAINTAIN THE DISCHARGE AIR TEMPERATURE OF 68°F (ADJ WINTER)

WARM-UP:
THE OUTSIDE AND EXHAUST AIR DAMPERS SHALL CLOSE, THE DX COOLING SHALL BE LOCKED OUT, THE RE-CIR DAMPER SHALL OPEN, THE SUPPLY FAN SHALL START, AND THE HOT WATER HEATING COIL CONTROL VALVE SHALL MODULATE TO MAINTAIN SPACE DISCHARGE SETPOINT. DISCHARGE AIR TEMPERATURE DURING WARM-UP SHALL BE 85°F (ADJ). THE SYSTEM SHALL BE PREVENTED FROM ENTERING THE WARM-UP MODE MORE THAN ONCE PER DAY.

COOL-DOWN:
THE OUTSIDE AND EXHAUST AIR DAMPERS SHALL CLOSE, THE HOT WATER VALVE SHALL BE LOCKED OUT, THE HOT GAS REHEAT SHALL BE LOCKED OUT, THE RE-CIRC DAMPER SHALL OPEN, THE SUPPLY FAN SHALL START, AND DX COOLING SHALL MODULATE TO MAINTAIN DISCHARGE SETPOINT OF 55°F (ADJ). MORNING COOL-DOWN SHALL OCCUR (1 HR. ADJ.) PRIOR TO UNIT SCHEDULED OCCUPIED START TIME (TIME PERIOD SHALL BE ADJUSTED THRU CONTROLLER'S OPTIMIZEDSTART LOGIC UTILIZING UNIT TREND DATA). ECONOMIZER MODE OF OPERATION SHALL OVER-RIDE NORMAL COOL-DOWN MODE OF OPERATION. OPTIMIZE START LOGIC SHALL ALLOW 55°F SUPPLY AIR TEMPERATURE TO BE UTILIZED TO MINIMIZE THE COOL DOWN PERIOD AND MINIMIZE USE OF REHEAT.

ECONOMIZER (DUAL ENTHALPY CONTROL):
THE CONTROLLER SHALL MEASURE THE RETURN AIR ENTHALPY TEMPERATURE AND MODULATE THE OUTSIDE AIR DAMPER, RETURN AIR DAMPER, AND VFD OF THE TOTAL WHEEL TO MAINTAIN A SETPOINT 2°F LESS THAN THE COOLING SUPPLY AIR TEMPERATURE SETPOINT.

THE ECONOMIZER SHALL BE ENABLED WHENEVER:

- OUTSIDE AIR TEMPERATURE IS LESS THAN 65°F (ADJ.),
- AND THE OUTSIDE AIR ENTHALPY IS LESS THAN 22 BTU/LB (ADJ).
- AND THE OUTSIDE AIR TEMPERATURE IS LESS THAN THE RETURN AIR TEMPERATURE.
- AND THE OUTSIDE AIR ENTHALPY IS LESS THAN THE RETURN AIR ENTHALPY.
- AND THE SUPPLY FAN STATUS IS ON.

THE ECONOMIZER SHALL BE DISABLED WHENEVER:

- OUTSIDE AIR TEMPERATURE DROPS FROM 40°F TO 35°F (ADJ.).
- OR ON LOSS OF SUPPLY FAN STATUS.
- OR THE FREEZESTAT IS ON.

EMERGENCY SHUTDOWN:
THE UNIT SHALL SHUT DOWN AND GENERATE AN ALARM UPON RECEIVING AN EMERGENCY SHUTDOWN SIGNAL.

LOW LEAVING TEMPERATURE:
UPON A LOW LEAVING TEMPERATURE CONDITION (38°F ADJ) SENSED BY THE SA-T SENSOR. THE OUTSIDE AIR AND EXHAUST AIR DAMPER SHALL CLOSE, AND THE SUPPLY AND EXHAUST AIR FAN SHALL SHUT DOWN AND AN ALARM SHALL BE GENERATED.

SMOKE DETECTION:
THE UNIT SHALL SHUT DOWN AND GENERATE AN ALARM UPON RECEIVING A SMOKE DETECTOR STATUS.

TOTAL RECOVERY WHEEL - VARIABLE SPEED:

THE CONTROLLER SHALL MODULATE THE HEAT RECOVERY WHEEL FOR ENERGY RECOVERY AS FOLLOWS.

COOLING RECOVERY MODE:

THE CONTROLLER SHALL MEASURE THE TOTAL WHEEL DISCHARGE AIR TEMPERATURE AND MODULATE THE TOTAL WHEEL SPEED TO MAINTAIN A SETPOINT 3°F (ADJ.) LESS THAN THE COLD DECK SUPPLY AIR TEMPERATURE SETPOINT. THE TOTAL WHEEL SHALL RUN FOR COOL RECOVERY WHENEVER:

- THE UNIT RETURN AIR TEMPERATURE IS 5°F (ADJ.) OR MORE BELOW THE OUTSIDE AIR TEMPERATURE.
- AND THE ECONOMIZER IS OFF.
- AND THE SUPPLY FAN IS ON.

HEATING RECOVERY MODE:

THE CONTROLLER SHALL MEASURE THE TOTAL WHEEL DISCHARGE AIR TEMPERATURE AND MODULATE THE TOTAL WHEEL SPEED TO MAINTAIN A SETPOINT 3°F (ADJ.) LESS THAN THE HOT DECK SUPPLY AIR TEMPERATURE SETPOINT. THE TOTAL WHEEL SHALL RUN FOR HEAT RECOVERY WHENEVER:

- THE UNIT RETURN AIR TEMPERATURE IS 5°F (ADJ.) OR MORE ABOVE THE OUTSIDE AIR TEMPERATURE.
- AND THE ECONOMIZER IS OFF.
- AND THE SUPPLY FAN IS ON.

UNOCCUPIED MODE:

THE UNIT SHALL BE OFF.

PERIODIC SELF-CLEANING:
THE HEAT WHEEL SHALL RUN AT 5% SPEED (ADJ.) FOR 10SEC (ADJ.) EVERY 4HRS (ADJ.) THE UNIT RUNS.

TOTAL WHEEL FROST PROTECTION:
THE HEAT WHEEL SHALL RUN AT 5% SPEED (ADJ.) WHENEVER:

- OUTSIDE AIR TEMPERATURE DROPS BELOW 15°F (ADJ.)
- OR WHENEVER EXHAUST AIR TEMPERATURE DROPS BELOW 20°F (ADJ.).

WHEEL DEFROST CYCLE

IF THE WHEEL DIFFERENTIAL PRESSURE RISES 1 INCH, (ADJ.) AND THE OUTSIDE AIR TEMPERATURE IS BELLOW 30°F, HE WHEEL SPEED SHALL BE REDUCED VIA WHEEL VARIABLE FREQUENCY DRIVE, OR THE ENERGY RECOVERY WHEEL FACE & BYPASS DAMPERS SHALL MODULATE OPEN TO BYPASS THE WHEEL UNTIL THE PRESSURE RETURNS TO NORMAL. WHEEL DEFROST CONTROL SEQUENCE SHALL BE CHOSEN PER MANUFACTURER'S RECOMMENDATIONS.

ALARMS SHALL BE PROVIDED AS FOLLOWS:

- RECOVERY WHEEL ROTATION FAILURE: COMMANDED ON, BUT THE STATUS IS OFF.
- RECOVERY WHEEL IN HAND: COMMANDED OFF, BUT THE STATUS IS ON.
- RECOVERY WHEEL RUNTIME EXCEEDED: STATUS RUNTIME EXCEEDS A USER DEFINABLE LIMIT (ADJ.).
- RECOVERY WHEEL VFD IN FAULT

SUPPLY FAN:
THE SUPPLY FAN SHALL RUN ANYTIME THE UNIT IS COMMANDED TO RUN. TO PREVENT SHORT CYCLING, THE SUPPLY FAN SHALL HAVE A USER DEFINABLE (ADJ.) MINIMUM RUNTIME, UNLESS SHUTDOWN ON SAFETIES.

ALARMS SHALL BE PROVIDED AS FOLLOWS:

- SUPPLY FAN FAILURE: COMMANDED ON, BUT THE STATUS IS OFF.
- SUPPLY FAN IN HAND: COMMANDED OFF, BUT THE STATUS IS ON.
- SUPPLY FAN RUNTIME EXCEEDED: STATUS RUNTIME EXCEEDS A USER DEFINABLE LIMIT (ADJ.).

EXHAUST FAN:
THE EXHAUST FAN SHALL RUN WHENEVER THE TOTAL ENERGY WHEEL RUNS OR THE UNIT IS IN ECONOMIZER, UNLESS SHUTDOWN ON SAFETIES.

ALARMS SHALL BE PROVIDED AS FOLLOWS:

- EXHAUST FAN FAILURE: COMMANDED ON, BUT THE STATUS IS OFF.
- EXHAUST FAN IN HAND: COMMANDED OFF, BUT THE STATUS IS ON.
- EXHAUST FAN RUNTIME EXCEEDED: STATUS RUNTIME EXCEEDS A USER DEFINABLE LIMIT (ADJ.).

CURRENT SWITCHES SHALL BE INSTALLED IN THE SUPPLY AND EXHAUST FAN STARTERS. THE DDC SYSTEM USES THESE SWITCHES TO CONFIRM THE FANS ARE IN THE DESIRED STATE (I.E. ON OR OFF) AND GENERATES AN ALARM IF STATUS DEVIATES FROM DDC START/STOP CONTROL.

DX COOLING:
THE CONTROLLER SHALL MEASURE THE SUPPLY AIR TEMPERATURE AND SHALL STAGE THE COMPRESSOR AND MODULATE THE VARIABLE SCROLL COMPRESSOR TO MAINTAIN REQUIRED COOLING AND/OR DEHUMIDIFICATION SETPOIN 52°F ADJ PRE-HEAT COIL. THE HOT GAS REHEAT SHALL MODULATE TO MAINTAIN A DISCHARGE AIR TEMPERATURE OF 65° ADJ.

THE COOLING SHALL BE ENABLED WHENEVER:

- OUTSIDE AIR TEMPERATURE IS GREATER THAN 60°F (ADJ.).
- AND THE SUPPLY AIR TEMPERATURE IS ABOVE COOLING SETPOINT.
- AND THE FAN STATUS IS ON.
- SPACE TEMPERATURE CALL FOR COOLING

HOT WATER HEATING COIL:
THE CONTROLLER SHALL MEASURE THE SUPPLY AIR TEMPERATURE AND MODULATE THE HOT WATER HEATING CONTROL VALVE TO MAINTAIN ITS HEATING SETPOINT TO MAINTAIN DISCHARGE AIR TEMPERATURE SET POINT OF 68°F (ADJ).

THE HEATING SHALL BE ENABLED WHENEVER:

- OUTSIDE AIR TEMPERATURE IS LESS THAN 65°F (ADJ.).
- AND THE SUPPLY AIR TEMPERATURE IS BELOW HEATING SETPOINT.
- AND THE FAN STATUS IS ON.
- HOT GAS REHEAT IS INOPERABLE (ALARM SHALL BE GENERATED)

THE HEATING SHALL NORMALLY BE DISABLED WHENEVER COOLING SYSTEM IS ENERGIZED AND HOT GAS REHEATING IS UTILIZED TO PROVIDE RE-HEAT.

OUTSIDE AIR FILTER DIFFERENTIAL PRESSURE MONITOR:
THE CONTROLLER SHALL MONITOR THE DIFFERENTIAL PRESSURE ACROSS THE PREFILTER.

ALARMS SHALL BE PROVIDED AS FOLLOWS:

- PREFILTER CHANGE REQUIRED: PREFILTER DIFFERENTIAL PRESSURE EXCEEDS A USER DEFINABLE LIMIT (ADJ.).

RETURN AIR FILTER DIFFERENTIAL PRESSURE MONITOR:
THE CONTROLLER SHALL MONITOR THE DIFFERENTIAL PRESSURE ACROSS THE FINAL FILTER.

ALARMS SHALL BE PROVIDED AS FOLLOWS:

- FINAL FILTER CHANGE REQUIRED: FINAL FILTER DIFFERENTIAL PRESSURE EXCEEDS A USER DEFINABLE LIMIT (ADJ.).

SUPPLY AIR TEMPERATURE:
THE CONTROLLER SHALL MONITOR THE SUPPLY AIR TEMPERATURE.

ALARMS SHALL BE PROVIDED AS FOLLOWS:

- HIGH SUPPLY AIR TEMP: IF THE SUPPLY AIR TEMPERATURE IS GREATER THAN 120°F (ADJ.).
- LOW SUPPLY AIR TEMP: IF THE SUPPLY AIR TEMPERATURE IS LESS THAN 45°F (ADJ.).

CONTROL POINT	AI	AO	BI	BO	AV	BV	LOOP	SCHED	TREND	ALARM	REMARKS
OUTSIDE AIR FLOW MEASURING STATION	X								X		
SUPPLY AIR FLOW MEASURING STATION	X								X		
EXHAUST AIR FLOW MEASURING STATION	X								X		
OUTSIDE AIR TEMP	X								X		
OUTSIDE AIR HUMIDITY	X								X		
EXHAUST AIR TEMP	X								X		
EXHAUST AIR HUMIDITY	X								X		
ENERGY RECOVERY HEAT WHEEL DISCHARGE AIR TEMP	X								X		
ENERGY RECOVERY WHEEL DISCHARGE AIR HUMIDITY	X								X		
DX SUPPLY AIR TEMP	X								X		
HOT GAS DX REHEAT	X								X		
SUPPLY AIR TEMP	X								X		
SUPPLY AIR HUMIDITY	X								X		
OUTSIDE AIR FILTER DIFFERENTIAL PRESSURE	X								X		
RETURN AIR FILTER DIFFERENTIAL PRESSURE	X								X		
RETURN AIR HUMIDITY	X								X		
RETURN AIR TEMP	X								X		
ENERGY RECOVERY WHEEL VFD SPEED	X								X		
SUPPLY FAN VFD SPEED	X								X		VFD TO BE USED ONLY FOR BALANCING
RETURN FAN VFD SPEED	X								X		VFD TO BE USED ONLY FOR BALANCING
DX COOLING STAGES/MODULATION		X							X		
HOT GAS REHEAT MODULATION		X							X		
HOT WATER HEATING CONTROL VALVE		X							X		
RE-CIRC AIR DAMPER		X							X		
OUTSIDE AIR DAMPER		X							X		
EXHAUST AIR DAMPER		X							X		
RETURN AIR SMOKE DETECTOR			X						X	X	
SUPPLY AIR SMOKE DETECTOR			X						X	X	
SUPPLY FAN STATUS			X						X		
EXHAUST FAN STATUS			X						X		
ENERGY RECOVERY WHEEL STATUS			X						X		
ENERGY RECOVERY WHEEL VFD FAULT			X						X	X	
SUPPLY FAN VFD FAULT			X						X	X	VFD TO BE USED ONLY FOR BALANCING
RETURN FAN VFD FAULT			X						X	X	VFD TO BE USED ONLY FOR BALANCING
SUPPLY FAN START/STOP				X					X		
EXHAUST FAN START/STOP				X					X		
ENERGY RECOVERY WHEEL START/STOP				X					X		
COOLING SUPPLY AIR SET POINT					X				X		
HEATING SUPPLY AIR SET POINT					X				X		
EMERGENCY SHUT DOWN						X			X	X	
SCHEDULE								X			
SUPPLY FAN FAILURE										X	
SUPPLY FAN IN HAND										X	
SUPPLY FAN RUNTIME EXCEEDED										X	
EXHAUST FAN FAILURE										X	
EXHAUST FAN IN HAND										X	
EXHAUST FAN RUNTIME EXCEEDED										X	
ENERGY RECOVERY WHEEL ROTATION FAILURE										X	
ENERGY RECOVERY WHEEL IN HAND										X	
TOTAL WHEEL RUNTIME EXCEEDED										X	
HIGH COOLING SUPPLY AIR TEMP										X	
HIGH HEATING SUPPLY AIR TEMP										X	
LOW HEATING SUPPLY AIR TEMP										X	
OUTSIDE AIR FILTER CHANGE REQUIRED										X	
RETURN AIR FILTER CHANGE REQUIRED										X	
HIGH RETURN AIR CARBON DIOXIDE CONCENTRATION										X	
HIGH RETURN AIR HUMIDITY										X	
LOW RETURN AIR TEMP										X	
HIGH RETURN AIR TEMP										X	

ATC CONTRACTOR TO PROVIDE ALL NECESSARY SENSORS, WIRING, PROGRAMMING, & MAPPING AS REQUIRED TO ACHIEVE SEQUENCE & OBTAIN ALL POINTS INDICATED ABOVE. ATC CONTRACTOR TO COORD. W/ UNIT MANUFACTURER TO PROVIDE SEAMLESS COMMUNICATION BETWEEN UNIT CONTROLS, INPUTS/OUTPUTS TO BMS SYSTEM GRAPHICS, & PROVIDE ALL READABLE/WRITEABLE POINTS.

ABBREVIATIONS

ALM	ALARM
AQ	AQUASTAT
ATC	AUTOMATIC TEMPERATURE CONTROLS
BLDG	BUILDING
BMS	BUILDING MANAGEMENT SYSTEM (ENERGY & AUTOMATION)
COMB	COMBUSTION
CO2	CARBON DIOXIDE
CR	CONTROL RELAY
CS	CURRENT SENSOR
CUV	CABINET UNIT VENTILATOR
D	DAMPER
DA	DISCHARGE AIR
DAS	DISCHARGE AIR SENSOR
DCW	DOMESTIC COLD WATER
DHW	DOMESTIC HOT WATER
DDC	DIRECT DIGITAL CONTROL
DO	DAMPER OPERATOR
DP	DIFFERENTIAL PRESSURE
DPR	DAMPER
EA	EXHAUST AIR
EF	EXHAUST FAN
F	FLOW/FARENHEIT (AS APPLICABLE)
FB	FACE & BYPASS
FD	FIRE DAMPER
H	HUMIDITY
HT	HIGH TEMPERATURE
HTG	HEATING
HR	HEAT RECOVERY
HWR	HOT WATER RETURN
HWS	HOT WATER SUPPLY
LT	LOW TEMPERATURE
M	MOTOR
MAT	MIXED AIR TEMPERATURE
NAC	NETWORK APPLICATION CONTROLLER
NC	NORMALLY CLOSED
NO	NORMALLY OPEN
OA	OUTSIDE AIR
OVR	OVERRIDE
P	PRESSURE
PB	PUSH BUTTON
PNL	PANEL
RA	RETURN AIR
REL	RELIEF AIR
RF	RETURN FAN
RFC	RETURN FAN CONTROLLER
RM	ROOM
SA	SUPPLY AIR
SD	SMOKE DAMPER OR SMOKE DETECTOR
SF	SUPPLY FAN
SFC	SUPPLY FAN CONTROLLER
SP	STATIC PRESSURE
T	TEMPERATURE
TEC	TERMINAL EQUIPMENT CONTROLLER
UV	UNIT VENTILATOR
VAC	VOLTS - ALTERNATING CURRENT
VDC	VOLTS - DIRECT CURRENT
VFD	SEE VSD
VLV	VALVE
VP	VELOCITY PROBE (AIRFLOW)
VSD	VARIABLE SPEED (FREQUENCY) DRIVE
XFMR	TRANSFORMER

ATC/BMS GENERAL NOTES

1. ALL SETPOINTS INDICATED IN THE SEQUENCE OF OPERATIONS SHALL BE ADJUSTABLE.

2. THE CONTROL POINTS LISTED IN THE SUMMARY MATRIX ARE THE MINIMUM CONTROL POINTS REQUIRED. PROVIDE ALL CONTROL POINTS AS REQUIRED FOR COMPLETE SYSTEM CONTROL PER THE SEQUENCE OF OPERATIONS.

3. ALL CONTROL WORK INDICATED ON THE CONTROL DIAGRAMS SHALL BE PROVIDED BY THE ATC CONTRACTOR UNLESS NOTED OTHERWISE.

4. ALL ATC CONTROLS SHALL BE POWERED BY EMERGENCY POWER CIRCUITS COORD W/ DIV 260000

5. ALL HW VALVES SHALL BE FAIL OPEN ON LOSS OF POWER

6. ALL HW RADIATION VALVES SHALL BE MODULATING TYPE FOR GPM > 1 GPM, 2-POSITION ACCEPTABLE FOR RADIATION HW FLOW < 1GPM

JOHNSON ROBERTS ASSOCIATES INC.
ARCHITECTS
15 PROPERZI WAY
SOMERVILLE, MA
01243 - 3228

GARCIA-GALUSKA-DESOUSA
CONSULTING ENGINEERS INC.
370 FAUNCE CORNER ROAD, DARTMOUTH, MA 02747-1217
508-998-5700 • FAX 508-998-0883 • E-MAIL info@g-g-d.com

Revisions:

CONCORD FREE PUBLIC LIBRARY EXPANSION

CONCORD, MA

Sheet Title:
Controls II - HVAC

Date: 24-Oct-19 Drawn By: RLP
Scale: 1/8"=1'-0" Project No.: 1714

M4.2

SYMBOL LIST

LEGEND NOTES:

A. THIS SHEET IS A GENERAL LIST OF SYMBOLS AND ABBREVIATIONS AND SHALL BE USED AS A DICTIONARY TO DEFINE ITEMS INDICATED ON DRAWINGS. NOT ALL SYMBOLS OR ABBREVIATIONS ARE NECESSARILY USED ON THIS PROJECT. ALL EQUIPMENT IS TO BE PROVIDED UNDER THIS SECTION UNLESS SPECIFICALLY INDICATED OTHERWISE.

LIGHTING FIXTURES (see lighting fixture schedule)

- LED LIGHT FIXTURE, CEILING MOUNTED SURFACE OR RECESSED.
- FIXTURE ON OPTIONAL STANDBY CIRCUIT.
- LED CHANNEL STRIP OR INDUSTRIAL STRIP.
- SINGLE FACE INTERNALLY LIT EXIT SIGN, ARROWS AS INDICATED ON DRAWINGS.
- DOUBLE FACE INTERNALLY LIT EXIT SIGN, ARROWS AS INDICATED ON DRAWINGS.
- CEILING MOUNTED FIXTURE-RECESSED, SURFACE OR PENDANT.
- WALL MOUNTED FIXTURE.
- A1-2 / 32b — FIXTURE KEYING SYSTEM
  A1 = FIXTURE TYPE
  32= CIRCUIT #
  b= SWITCH CONTROL
  2=FIXTURE QUANTITY
- TRACK MOUNTED FIXTURES-LENGTH OF TRACK AS INDICATED ON DRAWINGS.
- WALL WASH OR DIRECTIONAL FIXTURE.
- POLE MOUNTED FIXTURE-DOUBLE OR SINGLE HEAD.

LIGHTING CONTROLS

- PC — ALCS PHOTOCELL - REFER TO "AUTOMATED LIGHTING CONTROL SYSTEM ONE-LINE DIAGRAM".
- PS — LOCAL 0-10V DIMMING PHOTOSENSOR. SENSOR SHALL BE CEILING MOUNTED, CLOSED LOOP, DUAL ZONE TYPE WITH OCCUPANCY SENSOR INTERFACE FEATURE.
- E/R — EMERGENCY BY-PASS RELAY (SOLID STATE TYPE) WITH "NORMAL SWITCH FOLLOW". FEATURE.
- OS, OS-PP, E PP-OS-PP — CEILING MOUNTED LOW VOLTAGE, DUAL TECHNOLOGY (PASSIVE INFRARED/ ULTRASONIC) OCCUPANCY SENSOR AND ASSOCIATED POWER PACK(S) AS REQUIRED FOR LOADS CONTROLLED. EACH SHALL BE PROVIDED WITH AUXILIARY RELAY OPTION AND DRY CONTACT CLOSURE TO INTERFACE WITH BUILDING MANAGEMENT SYSTEM (BMS) TO PROVIDE OCCUPANCY STATUS.
- M a — ALCS MASTER CONTROL STATION - REFER TO "AUTOMATED LIGHTING CONTROL SYSTEM ONE-LINE DIAGRAM". LOWERCASE SUBSCRIPT (E.X.: "a") DESIGNATES SWITCH CONTROL.

SWITCHES (typically mtd 48" AFF u.n.o) ℄

- S_a — SINGLE POLE SWITCH-"a" DESIGNATES SWITCH CONTROL (LOWER CASE).
- S_2 — TWO POLE SWITCH
- S_3 — THREE-WAY SWITCH.
- S_P — SINGLE POLE SWITCH WITH PILOT LIGHT-GLOWS IN "OFF" POSITION WHEN IN VIEW OF LIGHTS. GLOWS IN "ON" POSITION WHEN REMOTE FROM LIGHTS.
- S_K — KEY OPERATED SWITCH.
- S_{WP} — WEATHERPROOF SINGLE POLE SWITCH.

SECURITY SYSTEM (addressable)

- M — MOTION SENSOR - WALL MOUNTED.
- M — MOTION SENSOR - CEILING MOUNTED.
- SM — SECURITY MODULE.
- DC — MAGNETIC DOOR CONTACT.
- K — ENTRY KEYPAD.
- SEC — SECURITY CONTROL PANEL.
- SECURITY SYSTEM PANIC PUSH BUTTON.
- D — DIGITAL DIALER - WITHIN CONTROL PANEL.
- SS — SIREN, WEATHERPROOF.
- GBD — GLASS BREAK DETECTOR.
- B — BLUE SECURITY ALARM BEACON - WEATHERPROOF.

WIRE AND RACEWAYS

- WIRING AND RACEWAY - NO. OF DIAGONAL LINES INDICATES NO. #12 AWG CONDUCTORS. ABSENCE OF DIAGONAL LINES INDICATES 2 #12 AWG+#12AWG GROUND UNLESS NOTED OTHERWISE. GROUND WIRE IS NOT SHOWN IN COUNT BUT SHALL BE PROVIDED.
- HOMERUN TO PANEL - NO. OF ARROWS INDICATES NO. OF 20 AMP/1 POLE CIRCUITS TO PANEL - UNLESS NOTED OTHERWISE.
- — 4F — FIRE ALARM WIRING - "4F" INDICATES 4 #14 THHN SOLID IN 3/4" MIN. SIZE CONDUIT.
- — — P — — UNDERGROUND PRIMARY ELECTRIC SERVICE
- — — SE — — UNDERGROUND SECONDARY ELECTRIC SERVICE
- 4" CONDUIT SLEEVE THRU-WAY, ACROSS CORRIDOR OR BETWEEN ROOMS FOR TEL/DATA - LOCATE ABOVE CEILING.
- CONDUIT SLEEVE EXTENDED TO NEAREST ACCESSIBLE CEILING- TERMINATE WITH INSULATED BUSHING.
- FLEXIBLE CONNECTION TO EQUIPMENT
- — — E — — EMERGENCY ONLY WIRING 2#10 AWG MINIMUM.

FIRE ALARM SYSTEM - (EXTENSION OF EXISTING)

- F — MANUAL PULL STATION - MTD 48" AFF TO ℄.
- F — VISUAL "ADA" COMPLIANT SIGNAL - MTD 80" AFF TO ℄.
- F — SPEAKER/VISUAL "ADA" COMPLIANT SIGNAL - MTD 80" AFF TO .℄
- S — CEILING MOUNTED PHOTOELECTRIC SMOKE DETECTOR.
- S_E — SMOKE DETECTOR ALSO USED FOR ELEVATOR RECALL.

FIRE ALARM SYSTEM (cont.)

- S_D — DUCT TYPE SMOKE DETECTOR WITH SAMPLING TUBE. FURNISHED BY EC, INSTALLED BY HVAC, WIRED BY EC.
- F H 135° — THERMAL DETECTOR - 135° F FIXED TEMPERATURE AND RATE OF RISE. "F" INDICATES FIXED TEMPERATURE ONLY.
- H 200° — THERMAL DETECTOR - 200° F FIXED TEMPERATURE.
- REMOTE ALARM INDICATOR-LABEL.
- RT — KEY OPERATED REMOTE TEST STATION WITH LED-LABEL.
- FS — SPRINKLER FLOW SWITCH - F&I BY F.P.C. WIRED BY E.C.
- TS — SPRINKLER TAMPER SWITCH - F&I BY F.P.C. WIRED BY E.C.
- PS — SPRINKLER PRESSURE SWITCH - F&I BY F.P.C. WIRED BY E.C.
- B — SPRINKLER ELECTRIC BELL.
- DH — MAGNETIC DOOR HOLDER - MTD 80" AFF TO ℄.
- FACP — FIRE ALARM CONTROL PANEL.
- ANN — FIRE ALARM ANNUNCIATOR.
- M — MASTER BOX-MTD AT 48" AFF TO ℄. WEATHERPROOF TYPE WHEN EXTERIOR MOUNTED.
- CO — WALL MOUNTED SYSTEM CONNECTED CARBON MONOXIDE DETECTOR EQUAL TO SYSTEM SENSOR #CO1224T. MOUNTING HEIGHT PER MANUFACTURERS RECOMMENDATION. PROVIDE (1) MONITOR MODULE PER DETECTOR.
- MM — MONITOR MODULE
- CM — CONTROL MODULE
- IM — ISOLATION MODULE
- FATC — FIRE ALARM TERMINAL CABINET

TELECOMMUNICATIONS & VIDEO

- W P — VOICE OUTLET - AT 18" A.F.F., UNO - SINGLE GANG OPENING AND 4"SQ. X 2 1/2"DP J.B. WITH 1"C. WITH PULL LINE TO NEAREST ACCESSIBLE CEILING SPACE. MOUNTING DESIGNATIONS: "C"=ABOVE COUNTER. "P" PUBLIC PHONE MOUNTED AT 48" A.F.F., "W" WALL PHONE AT 48" A.F.F. WIRING AND JACKS BY I.T. SUBCONTRACTOR
- VOICE/DATA OUTLET - AT 18" A.F.F., UNO - SINGLE GANG OPENING AND 4"SQ. X 2 1/2"DP J.B. WITH 1"C. WITH PULL LINE TO NEAREST ACCESSIBLE CEILING SPACE. MOUNTING DESIGNATIONS: "C"=ABOVE COUNTER. WIRING AND JACKS BY I.T. SUBCONTRACTOR.
- DATA OUTLET - AT 18" A.F.F. UNO-SINGLE GANG OPENING AND 4"SQ. X 2 1/2"DP J.B. WITH 1"C. WITH PULL LINE TO NEAREST ACCESSIBLE CEILING SPACE. MOUNTING DESIGNATIONS: "C"=ABOVE COUNTER. JACKS AND WIRING BY I.T. SUBCONTRACTOR.
- AN — WIRELESS ACCESS NODE DATA OUTLET - ABOVE CEILING UNO-SINGLE GANG OPENING AND 4"SQ. X 2 1/2"DP J.B. WITH 1"C. WITH PULL LINE TO NEAREST ACCESSIBLE CEILING SPACE. JACKS AND WIRING BY I.T. SUBCONTRACTOR.
- DATA OUTLET FLUSH FLOOR MOUNTED - PROVIDE FLOOR BOX WITH SINGLE GANG OPENING WITH 1"C. WITH PULL LINE TO NEAREST ACCESSIBLE CEILING OF SAME FLOOR. WIRING AND JACKS BY I.T. SUBCONTRACTOR.
- TVC — VIDEO OUTLET - AT 60" A.F.F. UNO - SINGLE GANG OPENING AND 4"SQ. X 2 1/2" DEEP J.B. WITH 1"C. WITH PULL LINE TO NEAREST ACCESSIBLE CEILING SPACE. WIRING AND JACKS BY I.T. SUBCONTRACTOR.
- 60" 60" TVE — VIDEO OUTLET & (2) 20AMP 120VOLT DUPLEX RECEPTACLE OUTLET PROVIDE WIREMOLD SERIES EFSB4 WALL BOX MODEL# EFSB4 OR EQUAL- AT 60"A.F.F., UNO-WITH (1)1 1/4"C. FOR DATA AND (1)1 1/4"C FOR FUTURE A/V WIRING WITH PULL LINE TO NEAREST ACCESSIBLE CEILING SPACE. DATA WIRING AND JACK BY I.T. SUBCONTRACTOR.
- T — VOICE/DATA OUTLET - AT 18" A.F.F., UNO - (1)DOUBLE GANG OPENING AND (1) 4"SQ.X4"DEEP J.B. WITH (1) 1 1/4"C. WITH PULL LINE TO NEAREST ACCESSIBLE CEILING SPACE. (2) SINGLE GANG OPENINGS AND (2) 4"SQ. X 2 1/2"DP J.B. WITH (2) 1"C. WITH PULL LINE TO NEAREST ACCESSIBLE CEILING SPACE. WIRING AND JACKS BY I.T. SUBCONTRACTOR.
- S — CEILING FLUSH MOUNTED SPEAKER. BACKBOX FURNISHED BY IT SUBCONTRACTOR, INSTALLED BY E.C.
- SRP — SMART RESCUE PHONE. CUSTOM BACK BOX FURNISHED BY IT SUBCONTRACTOR AND INSTALL BY E.C. 1" CONDUIT W/PULL STRING TO NEAREST ACCESSIBLE CEILING SPACE BY E.C.. DEVICE AND WIRING BY I.T. SUBCONTRACTOR.
- ARA — AREA OF RESCUE ASSISTANCE BUTTON. CUSTOM BACK BOX FURNISHED BY IT SUBCONTRACTOR AND INSTALL BY E.C. 1" CONDUIT W/PULL STRING TO NEAREST ACCESSIBLE CEILING SPACE BY E.C.. DEVICE AND WIRING BY I.T. SUBCONTRACTOR.

SECURITY SYSTEM (CONNECT TO EXISTING SYSTEM)

- K — INTRUSION ALARM LCD KEYPAD @48"A.F.F. SINGLE GANG BOX, 3/4" CONDUIT W/ PULL STRING TO NEAREST ACCESSIBLE CEILING SPACE BY E.C.
- DC — DOOR POSITION SWITCH - GE/SENTROL 1076DB DOUBLE POLE DEVICE ONE POLE TO ACCESS CONTROL, SECOND POLE TO INTRUSION, COORDINATE HOLE WITH DOOR HARDWARE. PROVIDE 3/4" CONDUIT w/ PULL STRING TO NEAREST ACCESSIBLE CEILING SPACE BY E.C.
- M — MOTION SENSOR - WALL MOUNTED SINGLE GANG BACK BOX W/3/4"C WITH PULL STRING TO NEAREST ACCESSIBLE CEILING SPACE BY E.C. WIRING BY E.C.
- M — MOTION SENSOR - CEILING MOUNTED, 360° SINGLE GANG BACK BOX AND 3/4"C WITH PULL STRING TO NEAREST ACCESSIBLE CEILING SPACE BY E.C. WIRING BY E.C.
- M — MOTION SENSOR - CORNER MOUNTED FOR 90° PATTERN SINGLE GANG BACK BOX AND 3/4"C WITH PULL STRING TO NEAREST ACCESSIBLE CEILING SPACE BY E.C. WIRING BY E.C.
- M — MOTION SENSOR - FOR LONG RANGE, CEILING MOUNTED SINGLE GANG BACK BOX AND 3/4"C WITH PULL STRING TO NEAREST ACCESSIBLE CEILING SPACE BY E.C. WIRING BY E.C.
- M — MOTION SENSOR - FOR 360° PATTERN SINGLE GANG BACK BOX AND 3/4"C WITH PULL STRING TO NEAREST ACCESSIBLE CEILING SPACE BY E.C. WIRING BY E.C.
- DJ — 4" SQ. DOOR JUNCTION BOX BY EC.
- SECURITY PANIC BUTTON, PROVIDED BY E.C. SINGLE GANG BOX, 3/4" CONDUIT & PULL STRING TO NEAREST ACCESSIBLE CEILING SPACE BY E.C.

RECEPTACLES (typically mtd. at 18" a.f.f., uno)

TYPICAL OUTLET NOTATIONS

- "a" = SWITCHED OUTLET, "a" - INDICATES SWITCH CONTROL.
- "C" = MOUNTED 6" ABOVE COUNTER OR 42" AFF. COORDINATE EXACT MOUNTING HEIGHT WITH ARCHITECTURAL DRAWINGS.
- "F" = FURNITURE MTD, COORDINATE EXACT LOCATION WITH FURNITURE PLANS.
- "GFC" = GROUND FAULT INTERRUPTER TYPE MOUNTED AT 42" AFF.
- "GFI" = GROUND FAULT INTERRUPTER TYPE.
- "H" = HORIZONTALLY MOUNTED.
- "IG" = ISOLATED GROUND RECEPTACLE WITH SEPARATE GREEN GROUND CONDUCTOR WITH YELLOW STRIPE TO ISOLATED GROUND BUS IN PANEL.
- "M" = MODULAR FURNITURE SERVICE - PROVIDE FLEXIBLE CONNECTION, COORDINATE EXACT LOCATION WITH FURNITURE PLANS.
- "SP" = SURGE PROTECTION RECEPTACLE
- "T" = TAMPER RESISTANT SAFETY RECEPTACLE.
- "TL" = TWIST LOCK TYPE.
- "WP" = WEATHERPROOF RECEPTACLE WITH "NRTL" LISTED COVERPLATE FOR WET LOCATION WITH GFI TYPE RECEPTACLE INSTALLED IN NEMA 4 ENCLOSURE W/KEY LOCK.
- "CD" = CABLE DROP RECEPTACLE- REFER TO CABLE DROP DETAIL.
- "P" = PEDESTAL MOUNTED ON CASEWORK WITH GFI RECEPTACLE. COORDINATE WITH EQUIPMENT DRAWINGS FOR EXACT LOCATION.

- 20AMP, 120 VOLT SINGLE RECEPTACLE
- 2 — 20 AMP, 120 VOLT DUPLEX RECEPTACLE; "2" INDICATES CIRCUIT NUMBER.
- 20AMP, 120 VOLT DOUBLE DUPLEX RECEPTACLE.
- SPECIAL PURPOSE OUTLET - RATING AS INDICATED ON DRAWINGS. EXAMPLE: ELECTRIC DRYER= 30A, 125/250V, 3 POLE, 4 WIRE, NEMA 14-30R ELECTRIC RANGE= 50A, 125/250V, 3 POLE, 4 WIRE, NEMA 14-50R
- 20 AMP, 120 VOLT DUPLEX RECEPTACLE FLUSH FLOOR MOUNTED EQUAL TO STEEL CITY #664-S WITH COVER #664-CST & (1) 664-S-RP.
- 20 AMP, 120 VOLT DOUBLE DUPLEX RECEPTACLE FLUSH FLOOR MOUNTED EQUAL TO STEEL CITY #664-S WITH COVER #664-CST & (2) 664-S-RP.
- EWC — ELECTRIC WATER COOLER OUTLET - 20 AMP, 120 VOLT. GROUND FAULT INTERRUPTER TYPE
- 20AMP, 120VOLT DUPLEX RECEPTACLE WITH HALF YOKE SWITCHED.
- SURFACE RACEWAY WITH BASE, COVER, AND DIVIDER "B,C&D". EQUAL TO WIREMOLD 4000 SERIES. PROVIDE FIBER READY 2" RADIUS FITTINGS. SOLID END INDICATES RISE TO ABOVE ACCESSIBLE CEILING SPACE WITH B,C&D.
- 20 AMP, 120 VOLT GFI, HORIZONTALLY MOUNTED ON FURNITURE DUPLEX RECEPTACLE INTENDED FOR COMPUTER USE. COLOR OF OUTLET TO BE SELECTED BY OWNER.
- 20 AMP, 120 VOLT DUPLEX RECEPTACLE INTENDED FOR COMPUTER USE. COLOR OF OUTLET TO BE SELECTED BY OWNER.
- 20AMP, 120VOLT DOUBLE DUPLEX RECEPTACLE INTENDED FOR COMPUTER USE. COLOR OF OUTLET TO BE SELECTED BY OWNER.
- TWO DUPLEX RECEPTACLES, MOUNTED AT 18" AFF AND 84" AFF.
- RECESSED FLOOR BOX WITH 20A, 120V DUPLEX RECEPTACLES AND PROVISIONS FOR (4) RJ45 JACKS EQUAL TO WALKER #RFB4-SS - S36CCTBS (CARPET), S36BBTCBS (WOOD FLOOR).
- RECESSED FLOOR BOX WITH (2) 20A, 120V DUPLEX RECEPTACLES AND PROVISIONS FOR (4) RJ45 JACKS EQUAL TO WIREMOLD #RFB4-SS - FPCTCBS (CARPET), FPBTCBS (WOOD FLOOR). AND (2) RFB-4TKO-SS PLATES. PROVIDE 1"C FOR TEL/DATA TO NEAREST ACCESSIBLE CEILING SPACE.
- RECESSED FLOOR BOX WITH (3) 20A, 120V DUPLEX RECEPTACLES AND PROVISIONS FOR (4) RJ45 JACKS EQUAL TO WIREMOLD #RFB4-SS - FPCTCBS (CARPET), FPBTCBS (WOOD FLOOR). AND (1) RFB-4TKO-SS PLATES. PROVIDE 1"C FOR TEL/DATA TO NEAREST ACCESSIBLE CEILING SPACE.
- RECESSED FLOOR BOX WITH (2) 20A, 120V DUPLEX RECEPTACLES AND PROVISIONS FOR (3) RJ45 JACKS & A/V DEVICES EQUAL TO WIREMOLD #RFB6-OG - FPCTCBS (CARPET), FPBTCBS (WOOD FLOOR). AND (2) RFB62A PLATES FOR RJ45 JACKS, (2)RFB6GFI FOR A/V DEVICES. PROVIDE 1"C FOR TEL/DATA & (2)1"C FOR A/V WIRING TO NEAREST ACCESSIBLE CEILING SPACE.
- 1V/2D, 2, 4 — FLUSH MOUNTED 2 HOUR RATED POKE-THRU ASSEMBLY WITH (2) DUPLEX RECEPTACLES & (4) COMMUNICATION DEVICES WITH SOLID BRASS FINISH RING. REQUIRES 6" CORED HOLE. PROVIDE WIREMOLD 6AT EVOLUTION SERIES, HUBBELL & FSR OR EQUAL.

POWER

- 120/208 VOLT, 3 PHASE, 4 WIRE PANELBOARD.
- PANELBOARD FLUSH MOUNTED.
- E — ELECTRIC MANHOLE
- T — TELEPHONE MANHOLE
- C — COMMUNICATIONS MANHOLE
- M — METER SOCKET
- J J — JUNCTION BOX - SIZE AS REQUIRED.
- DW J — JUNCTION BOX - WITH FLEXIBLE CONNECTION TO EQUIPMENT-"DW" DENOTES DISHWASHER, "H" HOOD, "WO" WALL OVEN, "D" DISPOSER, "HD" HAND DRYER.
- 3R — FUSED DISCONNECT SWITCH HEAVY DUTY TYPE-"3R" INDICATES NEMA 3R
  20 ← INDICATES TIME DELAY FUSE SIZE.
  30 ← INDICATES SAFETY SWITCH SIZE
- 3R — UNFUSED DISCONNECT SWITCH HEAVY DUTY TYPE-"3R" INDICATES NEMA 3R
- RV — MAGNETIC MOTOR STARTER, "RV" INDICATES REDUCED VOLTAGE.
- COMBINATION FUSED DISCONNECT AND MOTOR STARTER
- TS — HORSEPOWER RATED THERMAL SWITCH WITH PILOT LIGHT
- VFD — VARIABLE FREQUENCY DRIVE.
- C — MULTIPOLE CONTACTOR IN NEMA I ENCLOSURE-RATINGS AND NUMBER OF POLES AS REQUIRED.
- CP — EQUIPMENT CONTROL PANEL.
- HOA — HAND-OFF-AUTOMATIC SELECTOR SWITCH.
- ••• — THREE FUNCTION PUSHBUTTON SWITCH (UP/DOWN/STOP)-FURNISHED BY EQUIPMENT SUPPLIER, INST. & WIRED BY EC.
- •• — ON/OFF PUSHBUTTON SWITCH.
- 70AT/100AF CB — ENCLOSED CIRCUIT BREAKER-"70AT" INDICATES 70 AMP TRIP; "100AF" INDICATES 100 AMP FRAME.
- PB — PULL BOX-SIZE AS REQUIRED.

ONE LINE POWER

- LOAD-BREAK SWITCH.
- CIRCUIT BREAKER.
- K — KIRK-KEY INTERLOCK.
- CURRENT TRANSFORMER
- POTENTIAL TRANSFORMER.
- LA — LIGHTNING ARRESTER AND GROUNDING TO PROTECT ALL PHASES.
- CONTACT, NORMALLY OPEN (NO).
- CONTACT, NORMALLY CLOSED (NC).
- ST — SHUNT TRIP COIL.
- CM — CUSTOMER METERING, ELECTRONIC SOLID STATE, EQUAL TO WESTINGHOUSE IQ DATA PLUS, UNLESS OTHERWISE INDICATED.
- POWER TRANSFORMER.
- FUSE, SIZE AS INDICATED.
- GF — GROUND FAULT SENSOR & RELAY.
- DRAWOUT CIRCUIT BREAKER.
- 400A / 300A — SWITCH AND FUSE
  "400A" - INDICATES AMPERE SWITCH SIZE.
  "300A" - INDICATES AMPERE FUSE SIZE.
- SYSTEM GROUND OR EQUIPMENT GROUND.
- N E L — AUTOMATIC TRANSFER SWITCH.

MISCELLANEOUS-DEVICES

- EPO — EMERGENCY POWER SHUNT TRIP - RED MUSHROOM HEAD WITH EXTENDED GUARD EQUAL TO SQUARE D NO. KR5RH13-K68 WITH EMERGENCY OFF LEGEND. MOUNT AT 48"AFF., U.O.I. PROVIDE NAMEPLATE INDICATING LOAD CONTROLLED "B" - INDICATES BREAK GLASS STATION WITH HAMMER SUPPORT CLIP AND FIVE REPLACEMENT DISCS STORED INSIDE BOX SUPPORTING DEVICE.
- HANDICAP DOOR ACTIVATE SWITCH-F&I BY SYSTEM SUPPLIER. PROVIDE 4"SQ X 2 1/2"DP JB AND 1"C WITH PULL LINE TO ELECTRIC DOOR OPERATOR.
- CLOCK - WALL MOUNTED - BY E.C.
- SV — SOLENOID VALVE-F&I BY P.C., WIRED BY E.C.
- TC — TIMECLOCK
- SPD — SURGE PROTECTION DEVICE
- TPD — TEMPERATURE SENSOR - CONNECT TO SECURITY SYSTEM.
- LS — LIMIT SWITCH.
- B — DOOR BELL-COORDINATE MH WITH ARCHITECT.
- LOW VOLTAGE PUSHBUTTON.
- 1 / E-3 — DETAIL IDENTIFIER-INDICATES DETAIL #1 ON DWG. E-3.
- GROUND BAR 24W" X 1/8" THICK X 18" LONG COPPER BUS, U.N.O.
- 2 / E-3, A A — SECTION IDENTIFIER- INDICATES SECTION A-A, DETAIL #2 ON DWG. E-3.
- K2 — EQUIPMENT TAG NUMBER, REFER TO EQUIPMENT SCHEDULE, "K" INDICATES KITCHEN "C" INDICATES COMPUTER.
- 1 — NOTE SYMBOL, "1" INDICATES TO REFER TO NOTE #1
- 3 — CIRCUIT SIZE NUMBER, REFER TO "CIRCUIT SIZE SCHEDULE".
- EL — ELECTRICAL DOOR LOCK - F&I BY HARDWARE, WIRED BY E.C.
- EH — ELECTRICAL DOOR HINGE - F&I BY HARDWARE, WIRED BY E.C.
- P — PANIC BAR WITH BUILT-IN MICROSWITCH - F&I BY HARDWARE, WIRED BY E.C.
- PT — POWER SUPPLY - FURNISHED BY HARDWARE, INSTALLED AND WIRED BY E.C.
- ML — ELECTROMAGNETIC LOCK - F&I BY HARDWARE, WIRED BY E.C.
- E — ELECTRIC DOOR-OPERATOR. FURN. & INST. BY GC, WIRED BY EC.

MECHANICAL EQUIPMENT

(REFER TO MECHANICAL EQUIPMENT SCHEDULE)

- BB — ELECTRIC BASEBOARD-FURNISHED BY HVAC, INSTALLED AND WIRED BY EC.
- CH — CABINET HEATER - F & I BY HVAC, WIRED BY E.C.
- UH — UNIT HEATER - F & I BY HVAC, WIRED BY E.C.
- EF — EXHAUST FAN - F & I BY HVAC, WIRED BY E.C.
- C.O. J — CONNECTION TO CARBON MONOXIDEMONITOR MIN. 3#14 AWG. PER MONITOR.
- TB — TERMINAL BOX-F&I BY HVAC WIRED BY E.C.
- FS D — MOTORIZED FIRE/SMOKE DAMPER-F&I BY HVAC, WIRED BY E.C. TO POWER & FIRE ALARM SYSTEM.
- 2 — MOTOR - NUMERAL INDICATES HORSEPOWER

EXISTING EQUIPMENT

	DOTTED DENOTES EXISTING EQUIPMENT.
X	EXISTING EQUIPMENT TO BE REMOVED AND CIRCUIT PULLED BACK TO NEXT ACTIVE OUTLET/BACK TO PANEL.
XM	EXISTING EQUIPMENT TO REMAIN.
XR	EXISTING EQUIPMENT TO BE REMOVED AND RELOCATED.
XL	NEW LOCATION OF RELOCATED EXISTING EQUIPMENT.
XN	EXISTING EQUIPMENT TO BE REMOVED AND NEW EQUIPMENT INSTALLED IN SAME LOCATION.
RR	REMOVE AND REINSTALL IN SAME LOCATION.

ABBREVIATIONS

A	AMPERE
AL	ALUMINUM
AF	AMP, FRAME
AFF	ABOVE FINISHED FLOOR
AFG	ABOVE FINISHED GRADE
AIC	INTERRUPTING CAPACITY
ALCS	AUTOMATED LIGHTING CONTROL SYSTEM
ARCH	ARCHITECT
AT	AMP TRIP
ATC	AUTO-TEMP CONTROL SUBCONTRACTOR
ATS	AUTOMATIC TRANSFER SWITCH
AWG	AMERICAN WIRE GAUGE
C	CONDUIT (GENERIC TERM FOR RACEWAY. PROVIDE AS SPECIFIED)
CATV	CABLE TELEVISION
CB	CIRCUIT BREAKER
CKT	CIRCUIT
CLG	CEILING
CU	COPPER
℄	CENTERLINE
DP	DEEP
DWG	DRAWING
EC	ELECTRICAL SUBCONTRACTOR
EWC	ELECTRIC WATER COOLER
EMT	ELECTRIC METALLIC TUBING
FA	FIRE ALARM
FPC	FIRE PROTECTION SYSTEM SUBCONTRACTOR
F&I	FURNISHED AND INSTALLED
G,GND	GROUND
GC	GENERAL CONTRACTOR
GFI	GROUND FAULT INTERRUPTER
HVAC	HEATING, VENTILATING, AND AIR CONDITIONING SUBCONTRACTOR
HP	HORSEPOWER
IG	ISOLATED GROUND
IMC	INTERMEDIATE METALLIC CONDUIT
IT	INFORMATION TECHNOLOGY SUBCONTRACTOR
JB	JUNCTION BOX
KCMIL	THOUSAND CIRCULAR MILS
KES	KITCHEN EQUIPMENT SUPPLIER
KVA	KILO-VOLT AMPERE
KW	KILO-WATT
LTG	LIGHTING
MCB	MAIN CIRCUIT BREAKER
MCC	MOTOR CONTROL CENTER
MCM	THOUSAND CIRCULAR MILS
MDP	MAIN DISTRIBUTION PANEL
MH	MOUNTING HEIGHT
MLO	MAIN LUGS ONLY
MTD	MOUNTED
MTG	MOUNTING
MTS	MANUAL TRANSFER SWITCH
NIC	NOT IN CONTRACT
NO,#	NUMBER
NTS	NOT TO SCALE
P	POLE(S)
PB	PULL BOX
PC	PLUMBING SUBCONTRACTOR
PH,Ø	PHASE
PVC	POLY-VINYL CHLORIDE CONDUIT
PWR	POWER
REF	REFRIGERATOR
RGS	RIGID GALVANIZED STEEL CONDUIT
SN	SOLID NEUTRAL
SWBD	SWITCHBOARD
TEL/DATA	TELEPHONE/DATA
TYP	TYPICAL
UNO	UNLESS NOTED OTHERWISE
WG	WIRE GUARD
WP	WEATHERPROOF
XFMR	TRANSFORMER
XP	EXPLOSION PROOF
@72"	MOUNT 72 INCHES TO CENTERLINE ABOVE FINISHED FLOOR OR GRADE

JOHNSON ROBERTS ASSOCIATES INC.

ARCHITECTS

15 PROPERZI WAY
SOMERVILLE, MA
01243 - 3228

GARCIA•GALUSKA•DESOUSA
CONSULTING ENGINEERS INC.
370 FAUNCE CORNER ROAD, DARTMOUTH, MA 02747-1217
508-998-5700 • FAX 508-998-0883 • E-MAIL info@g-g-d.com

Revisions:

CONCORD FREE PUBLIC LIBRARY EXPANSION

CONCORD, MA

Sheet Title: ELECTRICAL SYMBOLS LIST

Date: 24-Oct-19 Drawn By: MLP

Scale: N.T.S. Project No.: 1714

E0.1

ACCEPTABLE MANUFACTURERS (OR EQUAL)

- (A) PMC, PHILIPS, CORELITE, ALERA
- (B) BETA CALCO, ADVENT, OCL, VISA
- (C) INTRA, PRUDENTIAL, LEGION, DAYOLITE
- (D) INTRA, SELUX, PRUDENTIAL, ALERA
- (E) HE WILLIAMS, DAY-BRITE, METALUX, LUMAX
- (F) PATHWAY, INTENSE, AMERLUX, JUNO
- (G) DAY-BRITE, HUBBELL, LUMARK, EXCELINE
- (H) JUNO, PORTFOLIO, PRESCOLITE, OMEGA
- (I) NORA, ALKO, LUXO, JUNO
- (J) US ARCHITECTURAL, LUMCA, SDL, HADCO
- (K) BEGA, WE-EF, INSIGHT, DELTA
- (L) EVENLITE, EXITRONIX, ISOLITE, PRO-LUME

MOUNTING DESIGNATIONS

C	COVE
P	PENDANT
R	RECESSED
S	SURFACE
T	TRACK / RAIL / CABLE
U	UNIVERSAL
W	WALL
AC	AIRCRAFT CABLE
BOL	BOLLARD
POLE	POLE

LIGHTING FIXTURE SCHEDULE

	TYPE	MANUFACTURER	MODEL / SERIES	MTG.	VOLTAGE	LIGHT SOURCE			DESCRIPTION
						LUMENS	WATTS	TYPE	
3 A	EL	BIRCHWOOD	VAN-LED-400-SLO-30-4'-DR-WM-STND-MW-FW-277-EB	S	UNIVERSAL	89.4/FT	4.4/FT	LED/3000K	4' LINEAR UTILITY FIXTURE WITH ACRYLIC LENS AND RATED FOR USE IN WET LOCATION, FIXTURE DEPTH NOT TO EXCEED 4".
3 4 H	FD1	PHILIPS	FD-6R-09-9-30-TE-1	R	UNIVERSAL	900	15.5	LED/3000K	6" FLAT DOWNLIGHT FIXTURE
3 G	J	SIMKAR	VAPLED-W-11-50-U1	W	UNIVERSAL	700	11	LED/5000K	SERVICE FIXTURE WITH CAST GUARD AND GLASS GLOBE
3 4 A	LP4	FINELITE	HP-4ID-4'-SO-SO-3000K-TG-UNV-FA-SC	AC	UNIVERSAL	3120	36.4	LED/3000K	4' LINEAR DIRECT / INDIRECT FIXTURE WITH SCULPTED ENDCAPS
3 4 A	LP8	FINELITE	HP-4ID-8'-SO-SO-3000K-TG-UNV-FA-SC	AC	UNIVERSAL	6240	72.8	LED/3000K	8' LINEAR DIRECT / INDIRECT FIXTURE WITH SCULPTED ENDCAPS
3 4 B	LR22	H.E. WILLIAMS	AT3-22-L50-830-D-DIM-UNV	R	UNIVERSAL	5000	49	LED/3000K	2'X2' FLAT PANEL FIXTURE
3 4 E	LS4	CREE	LS4C-40L-35K-10V	S	UNIVERSAL	4000	29	LED/3000K	1'X4' LENSED STRIP FIXTURE
3 4 E	LS8	CREE	LS8-80L-35K-10V	S	UNIVERSAL	8400	80	LED/3000K	1'X8' LENSED STRIP FIXTURE
3 G	LW3	NEO-RAY	S122-DIW-ULO-LO-30-0036-1-D-U-DD-1-NA	W	UNIVERSAL	2200	20	LED/3000K	3' LINEAR WALL MOUNTED DIRECT/INDIRECT FIXTURE
3 G	LW4	NEO-RAY	S122-DIW-ULO-LO-30-0048-1-D-U-DD-1-NA	W	UNIVERSAL	2880	26.9	LED/3000K	4' LINEAR WALL MOUNTED DIRECT/INDIRECT FIXTURE
3 G	LW6	NEO-RAY	S122-DIW-ULO-LO-30-0072-1-D-U-DD-1-NA	W	UNIVERSAL	4300	40.5	LED/3000K	6' LINEAR WALL MOUNTED DIRECT/INDIRECT FIXTURE
3 4 A	P1	EUREKA	4256-12	P	UNIVERSAL	662	16.2	LED/3000K	12" DIAMETER CIRCULAR PENDANT FIXTURE
3 4 A	P2	EUREKA	4256-24	P	UNIVERSAL	1538	32.4	LED/3000K	24" DIAMETER CIRCULAR PENDANT FIXTURE
3 4 A	P3	EUREKA	4256-36	P	UNIVERSAL	2930	47.9	LED/3000K	36" DIAMETER CIRCULAR PENDANT FIXTURE
3 4 A	P4	AMERICAN GLASS LIGHT	86132-P-LED	P	UNIVERSAL	3210	38	LED/3000K	32" DIAMETER CIRCULAR PENDANT FIXTURE
3 4 H	RC1	INTENSE	SS4DRWD227/IC430HZ-SF	R	UNIVERSAL	1557	26.3	LED/3000K	4" DOWNLIGHT FIXTURE WITH SEMI-SPECULAR REFLECTOR
2 3 5 J	SL1	LOUIS POULSEN	91608-US-LITMS-FLINDT-B-LED-3	BOLLARD	UNIVERSAL	420	15	LED/3000K	AREA LIGHTING FIXTURE WITH TYPE V OPTICS AND 12' ROUND TAPERED ALUMINUM POLE (W/ ANCHOR BOLT COVER)
2 3 5 J	SL2	TARGETTI	ZES-RP-FW-CC-LI-30-24	W	UNIVERSAL	47	5.4	LED/3000K	LED SMALL STEPLIGHT
2 3 5 J	SL3	TARGETTI	SAM-RP-WF-L1-30-24-1E3178	R	UNIVERSAL	11	3	LED/3000K	INGROUND LED FIXTURE
3 H	SM1	EUREKA	4547-LED.25-30-55-UNV-DV-RC	S	UNIVERSAL	2803	25	LED/3000K	SURFACE MOUNTED SPOT LIGHT FIXTURE
3 H	SM2	EUREKA	1208-15-LED-30-40-UNV-DV	S	UNIVERSAL	872	18	LED/3000K	SURFACE MOUNTED DOWNLIGHT SHADE FIXTURE
3 4 H	UC	ACOLYTE	CH-AS1-F-24-NONE-3.0-30-XX	R	UNIVERSAL	252/LF	3/LF	LED/3000K	CONTINUOUS TASK LIGHTING FIXTURE; COMPLETE WITH ACCESSORIES REQUIRED FOR RUNS SHOWN
3 I	WS1	REJUVENATION	R3852	S	UNIVERSAL	-	60	LED/3000K	DECORATIVE WALL SCONCE
3 I	WS2	EUREKA	4547-LED.25-30-38-UNV-DV-RC	S	UNIVERSAL	2803	25	LED/3000K	DECORATIVE SPOT LIGHT
3 4 H	WW	INTENSE	SS4G4WRL4308/IC437HZ-SF	R	UNIVERSAL	850	21	LED/3000K	4" WALL WASH FIXTURE WITH SEMI-SPECULAR REFLECTOR
L		EVENLITE	TEX-AC-R-1C	U	UNIVERSAL	N/A	1	LED	SINGLE FACED EDGELIT ACRYLIC EXIT SIGN WITH HANDICAP ACCESSIBLE GRAPHIC, SELF POWERED
L		EVENLITE	TEX-AC-R-2M	U	UNIVERSAL	N/A	1.2	LED	DOUBLE FACED EDGELIT ACRYLIC EXIT SIGN WITH HANDICAP ACCESSIBLE GRAPHIC, SELF POWERED
1 L	HC	EVENLITE	TEX-AC-R-1C-HC	U	UNIVERSAL	N/A	1	LED	SINGLE FACED EDGELIT ACRYLIC EXIT SIGN WITH HANDICAP ACCESSIBLE GRAPHIC, SELF POWERED

LIGHTING GENERAL NOTES

1. MANUFACTURERS AND CATALOG NUMBERS IDENTIFIED IN THE "LIGHTING FIXTURE SCHEDULE" SHALL SERVE TO ESTABLISH THE BASIS OF DESIGN FOR EACH LIGHTING FIXTURE TYPE. PRODUCTS OF EQUAL APPEARANCE, CONSTRUCTION, PERFORMANCE, AND WARRANTY COVERAGE FROM MANUFACTURERS OTHER THAN THOSE IDENTIFIED MAY BE PROPOSED FOR USE ON THIS PROJECT, SUBJECT TO REVIEW AND APPROVAL BY THE ARCHITECT AND ENGINEER. THE "FIXTURE MANUFACTURER OPTIONS (OR EQUAL)" LISTING IS PROVIDED FOR GUIDANCE IN IDENTIFYING MANUFACTURERS CAPABLE OF PROVIDING EQUAL PRODUCTS, BUT IN NOW WAY LIMITS MANUFACTURERS OR PRODUCTS THAT MAY BE PROPOSED AS EQUALS FOR THE PROJECT.
2. "LIGHTING FIXTURE SCHEDULE" REMARKS, "LIGHTING FIXTURE SCHEDULE NOTES", "LIGHTING GENERAL NOTES", AND NOTATIONS ELSEWHERE MAY INDICATE FEATURES AND ACCESSORIES THAT ARE NOT INDICATED IN THE CATALOG NUMBER BUT ARE REQUIRED FOR THE PROJECT. PRODUCTS OTHER THAN THOSE SPECIFIED SUBMITTED SHALL BE DOCUMENTED FOR CONFORMANCE IN PERFORMANCE, CONSTRUCTION, AND APPEARANCE WITH THE CRITERIA ESTABLISHED BY THE SPECIFIED PRODUCT.
3. FURNISH ALL LIGHTING FIXTURES COMPLETE WITH MOUNTING ACCESSORIES TO MEET THE JOB REQUIREMENTS. VERIFY ROOM SURFACE CONSTRUCTION AND FINISHES PRIOR TO ORDERING FIXTURES TO ENSURE PROPER MOUNTING PROVISIONS AND FIXTURE FITTINGS. REFER TO LATEST ARCHITECTURAL DRAWINGS.
4. VERIFY ALL FIXTURE MOUNTING HEIGHTS AND LOCATIONS WITH LATEST ARCHITECTURAL DRAWINGS. EXACT LOCATION OF FIXTURES SHALL BE CONFIRMED WITH THE ARCHITECT PRIOR TO START OF ROUGHING.
5. FIXTURES SHALL BE SUPPORTED FROM THE BUILDING STRUCTURE, INDEPENDENT OF HUNG CEILINGS. DO NOT TAP METAL ROOF DECK FOR SUPPORT OF ANY ELECTRICAL EQUIPMENT. PROVIDE UNISTRUT AS REQUIRED FOR SUPPORT OF ALL ELECTRICAL EQUIPMENT.

LIGHTING FIXTURE SCHEDULE NOTES (⊙)

1. PROVIDE EXIT SIGN THAT COMPLIES WITH WITH NFPA 101, UL 924, 521 CMR 26.1.2 AND ALL REFERENCED STANDARDS AND CODES.
2. SITE LIGHTING HAS BEEN SPECIFIED WITH THE FOLLOWING BACKLIGHT, UPLIGHT, AND GLARE RATINGS AS DEFINED BY IES TM-15-07 :

   SL1/4L = B2/U0/G1, SL1/5L = B4/U0/G1, SL4 = B0/U0/G1
3. FIXTURE SHALL BE PROVIDED WITH 0-10V DIMMING DRIVER(S) AS REQUIRED FOR LAMPS / LED MODULES SPECIFIED TO BE CONTROLLED VIA A 0-10V SIGNAL FROM ALCS.
4. FIXTURE SHALL BE PROVIDED WITH BI-LEVEL DRIVER(S) AS REQUIRED FOR LED MODULES SPECIFIED TO BE CONTROLLED AT 100% AND 50% OUTPUT VIA SWITCHED CIRCUITS CONTROLLED BY THE ALCS.

GENERAL NOTES

1. THE SCOPE OF WORK SHALL INCLUDE PROVIDING ALL WORK INDICATED, AND COORDINATION WITH ALL TRADES. SCOPE OF WORK IS INDICATED ON THE CONTRACT DOCUMENTS INCLUDING THE DRAWINGS AND THE SPECIFICATIONS, WHICH ARE COMPLIMENTARY. WORK INDICATED IN ANY CONTRACT DOCUMENT SHALL BE CONSIDERED PART OF THE SCOPE OF WORK. IN GENERAL, WORK REQUIREMENTS ARE NOT INDICATED IN BOTH DOCUMENTS . WHERE DOCUMENTS CONFLICT WITHIN THEMSELVES OR WITH CODES AND REGULATIONS, PROVIDE THE HIGHER QUANTITY AND QUALITY AND FOLLOW THE STRICTER REQUIREMENTS.
2. COORDINATE WITH THE GENERAL CONTRACTOR, OTHER TRADES AND OF MANUFACTURERS EQUIPMENT AND MAKE ALL FINAL CONNECTIONS AS REQUIRED, I.E., POWER, CONTROL, INTERLOCK, ETC.
3. ELECTRICAL WORK SHALL BE IN ACCORDANCE WITH OSHA, NFPA STANDARDS, THE ELECTRICAL CODE AND THE LOCAL GOVERNING AUTHORITIES. THE DRAWINGS AND SPECIFICATIONS DO NOT ATTEMPT TO INDICATE ALL WORK REQUIRED BY CODES AND AUTHORITIES.
4. TEST ALL EQUIPMENT AND SYSTEMS INSTALLED TO CERTIFY COMPLIANCE WITH DRAWINGS, SPECIFICATIONS, CODES, LOCAL AUTHORITIES AND REGULATIONS. INCLUDE LABOR AND COSTS FOR TESTING, REVIEWS, APPROVALS AND CERTIFICATIONS.
5. DRAWINGS ARE DIAGRAMMATIC ONLY. EXACT LOCATION, MOUNTING HEIGHTS OF EQUIPMENT AND ROUTING OF RACEWAYS SHALL BE COORDINATED WITH THE EQUIPMENT REQUIREMENTS AND FIELD CONDITIONS.
6. FURNISH AND INSTALL ALL INCIDENTAL ACCESSORIES NECESSARY TO MAKE THE ELECTRICAL WORK COMPLETE AND READY FOR OPERATION.
7. SUPPORT ALL WORK FROM THE BUILDING STRUCTURE.
8. ALL MOUNTING HEIGHTS ARE TO CENTERLINE UNLESS OTHERWISE INDICATED.
9. IF EXACT MOUNTING OR RACEWAY ROUTINGS ARE NOT INDICATED (LOCATION OR HEIGHT) REQUEST CLARIFICATION PRIOR TO ROUGHING, OR INSTALLATION.
10. ELECTRICAL WORK SHALL BE RECESSED INTO WALLS OR INSTALLED ABOVE HUNG CEILINGS UNLESS OTHERWISE INDICATED.
11. DO NOT INSTALL OUTLETS BACK TO BACK. PROVIDE 24 INCH SPACING IN FIRE RATED WALLS.
12. PROVIDE ELECTRICAL OUTLET PLATE GASKET SEALS AT RECEPTACLES, SWITCHES AND OTHER ELECTRICAL BOXES ON EXTERIOR WALLS AND INTERIOR WALLS BETWEEN CONDITIONED AND NON-CONDITIONED SPACES.
13. WIRE AND CONDUIT SIZES INDICATED ON HOMERUNS SHALL BE CONTINUOUS THROUGHOUT CIRCUIT.
14. FURNISH AND INSTALL CODE REQUIRED DISCONNECTS WHICH ARE NOT FURNISHED BY THE HVAC OR PLUMBING CONTRACTORS.
15. INSTALL A GREEN GROUNDING CONDUCTOR WITHIN EACH RACEWAY SIZED IN ACCORDANCE WITH THE ELECTRIC CODE.
16. PROVIDE WATERTIGHT AND GAS TIGHT SEALS INSIDE AND OUTSIDE OF CONDUITS THAT PENETRATE THE BUILDING BELOW GRADE. O.Z. GEDNEY OR APPROVED EQUAL. PROVIDE WEATHER TIGHT SEAL AT PENETRATIONS ABOVE GRADE.
17. PROVIDE NRTL LISTED SMOKE AND FIRE SEALS AT ALL PENETRATIONS THROUGH FLOORS OR FULL HEIGHT (SLAB TO SLAB) WALLS.
18. USE CAUTION TO AVOID DAMAGE TO EXISTING UTILITY LINES AND/OR HARM TO PERSONNEL WORKING IN THESE AREAS.
19. ALL BRANCH CIRCUIT CONDUCTORS SHALL BE COPPER MINIMUM #12 AWG. SIZE UNLESS OTHERWISE INDICATED.
20. PROVIDE A PULL LINE IN EVERY EMPTY CONDUIT PROVIDED UNDER THIS SECTION.

WIRING NOTES

1. WIRING IS INDICATED ON DRAWINGS ONLY FOR SPECIFIC ROUTES OR SPECIAL CONDITIONS.
2. WIRING AND CONDUIT SHALL BE REQUIRED BETWEEN ALL OUTLETS INDICATED WITH CIRCUIT NUMBERS AND PANEL DESIGNATIONS.
3. ALTHOUGH ALL BRANCH CIRCUIT WIRE AND CONDUIT IS NOT SHOWN, IT IS THE INTENT OF THESE DOCUMENTS THAT A COMPLETE BRANCH CIRCUIT WIRING SYSTEM BE PROVIDED.
4. ALL SWITCH CONTROLS SHALL BE PROVIDED WITH WIRING AND CONDUIT AS REQUIRED.
5. RACEWAYS SHALL BE LIMITED TO SIX CURRENT CARRYING CONDUCTORS (THREE PHASE AND THREE NEUTRALS) AND GROUNDING CONDUCTOR, UNLESS OTHERWISE INDICATED. PROVIDE A DEDICATED NEUTRAL CONDUCTOR FOR EACH SINGLE PHASE RECEPTACLE CIRCUIT UNLESS AN OVERSIZED NEUTRAL IS SPECIFICALLY INDICATED.

JOHN ON ROBERT A O IATE IN . AR HITE T

15 PROPERZI WAY
SOMERVILLE, MA
01243 - 3228

GARCIA-GALUSKA-DESOUSA
CONSULTING ENGINEERS INC.
370 FAUNCE CORNER ROAD, DARTMOUTH, MA 02747-1217
508-998-5700 • FAX 508-998-0883 • E-MAIL info@g-g-d.com

Revisions:

CONCORD FREE PUBLIC LIBRARY EXPANSION

CONCORD, MA

Sheet Title:

LIGHTING FIXTURE SCHEDULE

Date: 24-Oct-19 Drawn By: JR

Scale: N.T.S. Project No.: 1714

E0.2

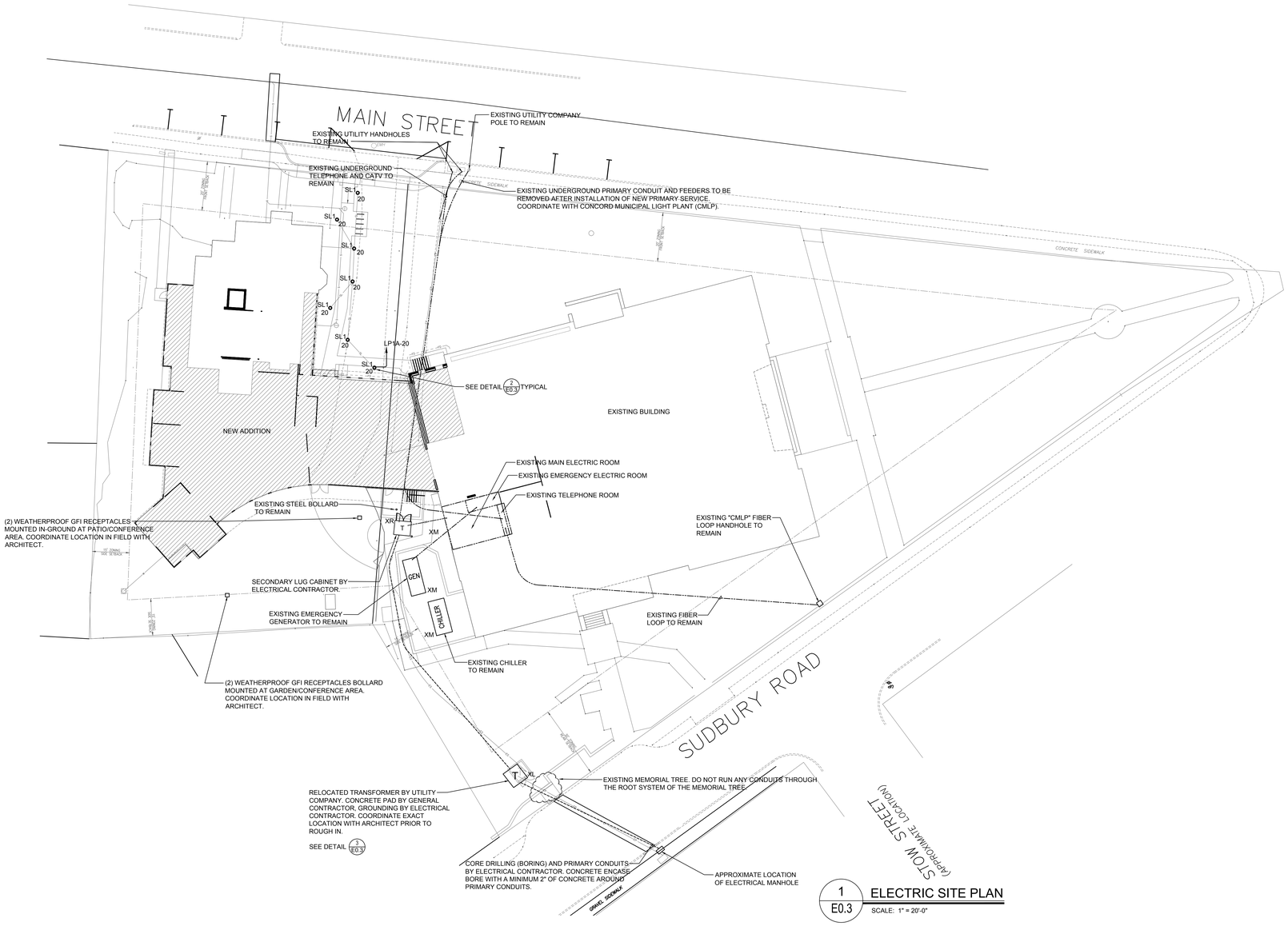

1 / E0.3 ELECTRIC SITE PLAN

SCALE: 1" = 20'-0"

GENERAL NOTES

1. DO NOT RUN ANY UNDERGROUND RACEWAYS WITHIN PLANTING AREAS. REFER TO LANDSCAPE DRAWINGS FOR LOCATIONS. COORDINATE ROUTING WITH ARCHITECT.
2. REFER TO CIVIL DRAWINGS FOR EXACT ROUTING OF UTILITIES. REFER TO LANDSCAPE DRAWINGS FOR EXACT LOCATIONS OF SITE LIGHT FIXTURES.
3. COORDINATE EXACT LOCATION OF SITE LIGHTING FIXTURES WITH ARCHITECT PRIOR TO ROUGHING-IN.
4. ALL SITE WIRING SHALL BE A MINIMUM OF 2#8 & 1#10G-1"C.
5. COORDINATE DUCT BANK & CONDUIT ROUTING W/ARCH
6. COORDINATE PHASING OF NEW SERVICES WITH ARCHITECT. BUILDING WILL BE VACANT FOR A PERIOD OF TIME BUT GENERALLY WILL REMAIN OCCUPIED DURING MOST OF THE CONSTRUCTION PERIOD.

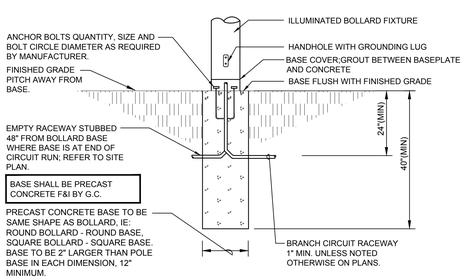

2 / E0.3 TYPE SL1 BOLLARD BASE DETAIL

SCALE: N.T.S.

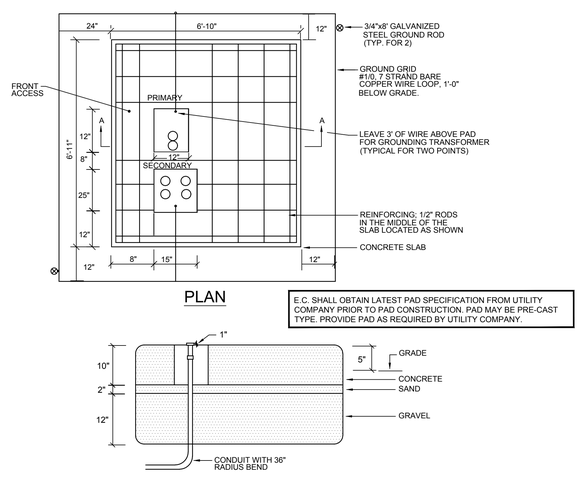

PLAN

E.C. SHALL OBTAIN LATEST PAD SPECIFICATION FROM UTILITY COMPANY PRIOR TO PAD CONSTRUCTION. PAD MAY BE PRE-CAST TYPE. PROVIDE PAD AS REQUIRED BY UTILITY COMPANY.

SECTION A-A

3 / E0.3 PADMOUNT TRANSFORMER BASE DETAIL

SCALE: N.T.S.

JOHN ON ROE ERT A O IATE IN . AF HITE T

15 PROPERZI WAY
SOMERVILLE, MA
01243 - 3228

GARCIA-GALUSKA-DESOUSA
CONSULTING ENGINEERS INC.
370 FAUNCE CORNER ROAD, DARTMOUTH, MA 02747-1217
508-998-5700 • FAX 508-998-0883 • E-MAIL info@g-g-d.com

Revisions:

CONCORD FREE PUBLIC LIBRARY EXPANSION

CONCORD, MA

Sheet Title:

Electrical Site Plan

Date: 24-Oct-19 Drawn By: MLP

Scale: 1"=20'-0" Project No.: 1714

E0.3

LIGHTING NOTES:

1. COORDINATE EXACT LOCATION OF ALL FIXTURES AND DEVICES WITH ARCHITECTURAL PLANS, ELEVATIONS, AND SECTIONS PRIOR TO INSTALLATION.
2. WIRING AND CONDUIT SHALL BE REQUIRED BETWEEN ALL OUTLETS INDICATED WITH CIRCUIT NUMBERS AND PANEL DESIGNATIONS.
3. ALTHOUGH ALL BRANCH CIRCUIT WIRE AND CONDUIT IS NOT SHOWN, IT IS THE INTENT OF THESE DOCUMENTS THAT A COMPLETE BRANCH CIRCUIT WIRING SYSTEM BE INSTALLED.
4. ALL BRANCH CIRCUIT CONDUCTORS SHALL BE TYPE MC 98% CONDUCTIVITY, COPPER MINIMUM #12 AWG SIZE, THWN/THHN INSULATION, 600 VOLTS RATED UNLESS OTHERWISE NOTED.
5. OCCUPANCY SENSOR TO BE LOCATED IN CENTER OF ROOM AND UNOBSTRUCTED PER MANUFACTURERS RECOMMENDATION IN ALL LOCATIONS.
6. COORDINATE WITH GENERAL CONTRACTOR TO HAVE ALL EXPOSED CONDUITS, RACEWAYS, WIREWAYS, BOXES, ETC. PAINTED TO MATCH SURROUNDING FINISH.
7. WIRING IS SHOWN ON DRAWINGS ONLY FOR SPECIFIC ROUTES OR SPECIAL CONDITIONS.
8. WIRING AND CONDUIT OR MC CABLE SHALL BE REQUIRED BETWEEN ALL FIXTURES, SWITCHES, DEVICES, ETC. INDICATED WITH CIRCUIT NUMBERS AND PANEL DESIGNATIONS.
9. EXIT SIGNS SHALL REMAIN "CONSTANT-ON". PROVIDE CIRCUIT BREAKER LOCK ON CIRCUIT SERVING EXIT SIGNS.
10. ALL EXIT SIGNS ON THESE PLANS SHALL BE CIRCUITED TO "ELPB".
11. ALL PENDANT LIGHTING SHALL BE SET AT 18" (MIN.) FROM CEILING TO TOP OF FIXTURE TO ALLOW FOR PROPER FIRE PROTECTION COVERAGE.
12. PROVIDE LOCK-ON DEVICE ON BREAKERS FOR BATTERY UNITS.

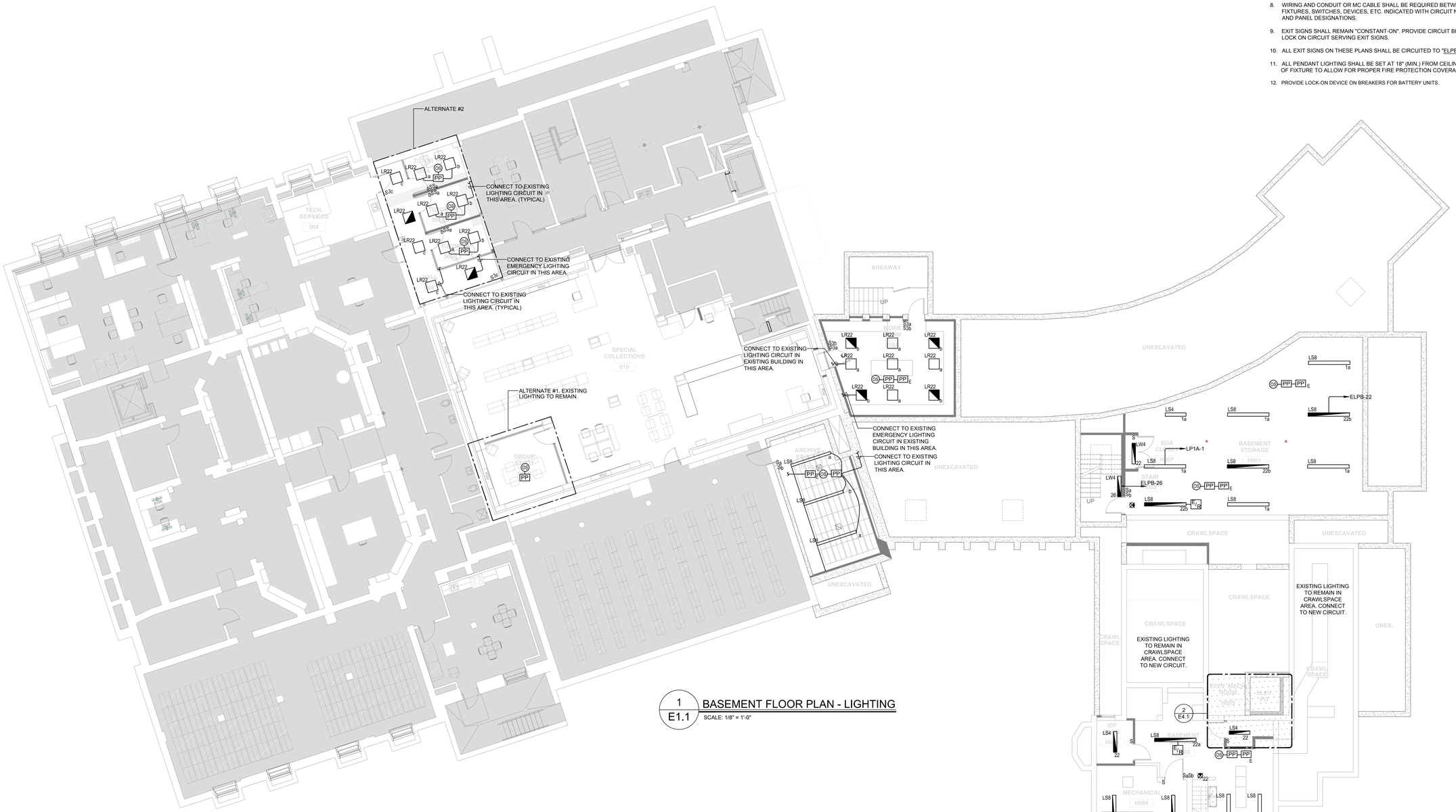

1 / E1.1 BASEMENT FLOOR PLAN - LIGHTING

SCALE: 1/8" = 1'-0"

JOHN ON ROBERT A O IATE IN .
AR HITE T

15 PROPERZI WAY
SOMERVILLE, MA
01243 - 3228

GARCIA-GALUSKA-DESOUSA
CONSULTING ENGINEERS INC.
370 FAUNCE CORNER ROAD, DARTMOUTH, MA 02747-1217
508-998-5700 • FAX 508-998-0883 • E-MAIL info@g-g-d.com

Revisions:

CONCORD FREE PUBLIC LIBRARY EXPANSION

CONCORD, MA

Sheet Title: Basement Floor Plan- Lighting

Date: 24-Oct-19 Drawn By: MLP

Scale: 1/8"=1'-0" Project No.: 1714

E1.1

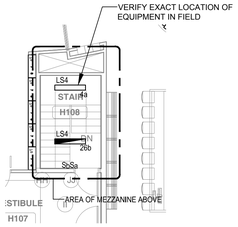

2 / E1.2 PART PLAN -MECHANICAL MEZZANINE

SCALE: 1/8" = 1'-0"

LIGHTING NOTES:

1. COORDINATE EXACT LOCATION OF ALL FIXTURES AND DEVICES WITH ARCHITECTURAL PLANS, ELEVATIONS, AND SECTIONS PRIOR TO INSTALLATION.
2. WIRING AND CONDUIT SHALL BE REQUIRED BETWEEN ALL OUTLETS INDICATED WITH CIRCUIT NUMBERS AND PANEL DESIGNATIONS.
3. ALTHOUGH ALL BRANCH CIRCUIT WIRE AND CONDUIT IS NOT SHOWN, IT IS THE INTENT OF THESE DOCUMENTS THAT A COMPLETE BRANCH CIRCUIT WIRING SYSTEM BE INSTALLED.
4. ALL BRANCH CIRCUIT CONDUCTORS SHALL BE TYPE MC 98% CONDUCTIVITY, COPPER MINIMUM #12 AWG SIZE, THWN/THHN INSULATION, 600 VOLTS RATED UNLESS OTHERWISE NOTED.
5. OCCUPANCY SENSOR TO BE LOCATED IN CENTER OF ROOM AND UNOBSTRUCTED PER MANUFACTURERS RECOMMENDATION IN ALL LOCATIONS.
6. COORDINATE WITH GENERAL CONTRACTOR TO HAVE ALL EXPOSED CONDUITS, RACEWAYS, WIREWAYS, BOXES, ETC. PAINTED TO MATCH SURROUNDING FINISH.
7. WIRING IS SHOWN ON DRAWINGS ONLY FOR SPECIFIC ROUTES OR SPECIAL CONDITIONS.
8. WIRING AND CONDUIT OR MC CABLE SHALL BE REQUIRED BETWEEN ALL FIXTURES, SWITCHES, DEVICES, ETC. INDICATED WITH CIRCUIT NUMBERS AND PANEL DESIGNATIONS.
9. EXIT SIGNS SHALL REMAIN "CONSTANT-ON". PROVIDE CIRCUIT BREAKER LOCK ON CIRCUIT SERVING EXIT SIGNS.
10. ALL EXIT SIGNS ON THESE PLANS SHALL BE CIRCUITED TO "ELPB".
11. ALL PENDANT LIGHTING SHALL BE SET AT 18" (MIN.) FROM CEILING TO TOP OF FIXTURE TO ALLOW FOR PROPER FIRE PROTECTION COVERAGE.
12. PROVIDE LOCK-ON DEVICE ON BREAKERS FOR BATTERY UNITS.

1 / E1.2 GROUND FLOOR PLAN - LIGHTING

SCALE: 1/8" = 1'-0"

JOHN ON ROBERT A O IATE IN .
AR HITE T

15 PROPERZI WAY
SOMERVILLE, MA
01243 - 3228

GARCIA-GALUSKA-DESOUSA
CONSULTING ENGINEERS INC.
370 FALMOUTH CORNER ROAD, DARTMOUTH, MA 02747-1217
508-998-5700 • FAX 508-998-0883 • E-MAIL info@g-g-d.com

Revisions:

CONCORD FREE PUBLIC LIBRARY EXPANSION

CONCORD, MA

Sheet Title:

Ground Floor Plan-Lighting

Date: 24-Oct-19 Drawn By: MLP

Scale: 1/8"=1'-0" Project No.: 1714

E1.2

LIGHTING NOTES:

1. COORDINATE EXACT LOCATION OF ALL FIXTURES AND DEVICES WITH ARCHITECTURAL PLANS, ELEVATIONS, AND SECTIONS PRIOR TO INSTALLATION.
2. WIRING AND CONDUIT SHALL BE REQUIRED BETWEEN ALL OUTLETS INDICATED WITH CIRCUIT NUMBERS AND PANEL DESIGNATIONS.
3. ALTHOUGH ALL BRANCH CIRCUIT WIRE AND CONDUIT IS NOT SHOWN, IT IS THE INTENT OF THESE DOCUMENTS THAT A COMPLETE BRANCH CIRCUIT WIRING SYSTEM BE INSTALLED.
4. ALL BRANCH CIRCUIT CONDUCTORS SHALL BE TYPE MC 98% CONDUCTIVITY, COPPER MINIMUM #12 AWG SIZE, THWN/THHN INSULATION, 600 VOLTS RATED UNLESS OTHERWISE NOTED.
5. OCCUPANCY SENSOR TO BE LOCATED IN CENTER OF ROOM AND UNOBSTRUCTED PER MANUFACTURERS RECOMMENDATION IN ALL LOCATIONS.
6. COORDINATE WITH GENERAL CONTRACTOR TO HAVE ALL EXPOSED CONDUITS, RACEWAYS, WIREWAYS, BOXES, ETC. PAINTED TO MATCH SURROUNDING FINISH.
7. WIRING IS SHOWN ON DRAWINGS ONLY FOR SPECIFIC ROUTES OR SPECIAL CONDITIONS.
8. WIRING AND CONDUIT OR MC CABLE SHALL BE REQUIRED BETWEEN ALL FIXTURES, SWITCHES, DEVICES, ETC. INDICATED WITH CIRCUIT NUMBERS AND PANEL DESIGNATIONS.
9. EXIT SIGNS SHALL REMAIN "CONSTANT-ON". PROVIDE CIRCUIT BREAKER LOCK ON CIRCUIT SERVING EXIT SIGNS.
10. ALL EXIT SIGNS ON THESE PLANS SHALL BE CIRCUITED TO "ELPB".
11. ALL PENDANT LIGHTING SHALL BE SET AT 18" (MIN.) FROM CEILING TO TOP OF FIXTURE TO ALLOW FOR PROPER FIRE PROTECTION COVERAGE.
12. PROVIDE LOCK-ON DEVICE ON BREAKERS FOR BATTERY UNITS.

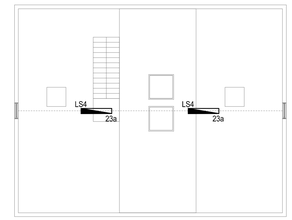

2 / E1.3 THIRD FLOOR PLAN - LIGHTING

SCALE: 1/8" = 1'-0"

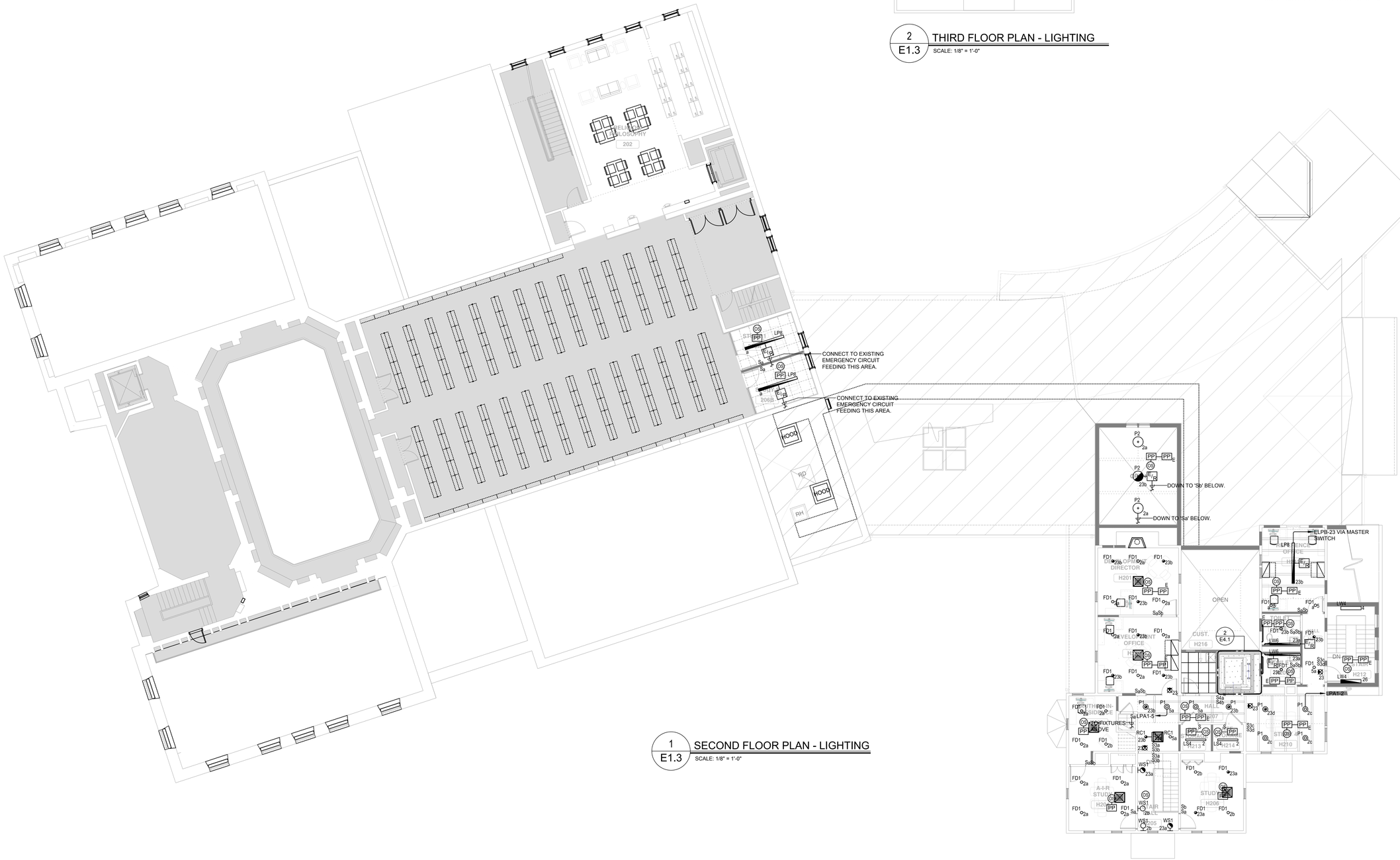

1 / E1.3 SECOND FLOOR PLAN - LIGHTING

SCALE: 1/8" = 1'-0"

JOHNSON ROBERT ASSOCIATES, INC.
ARCHITECTS

15 PROPERZI WAY
SOMERVILLE, MA
01243 - 3228

GARCIA-GALUSKA-DESOUSA
CONSULTING ENGINEERS INC.
370 FAUNCE CORNER ROAD, DARTMOUTH, MA 02747-1217
508-998-5700 • FAX 508-998-0883 • E-MAIL info@g-g-d.com

Revisions:

CONCORD FREE PUBLIC LIBRARY EXPANSION

CONCORD, MA

Sheet Title: Second Floor Plan - Lighting

Date: 24-Oct-19 Drawn By: MLP

Scale: 1/8"=1'-0" Project No.: 1714

E1.3

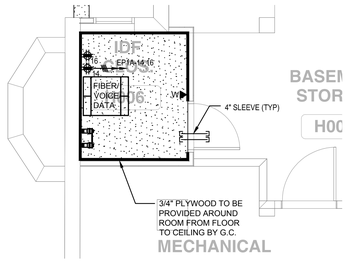

2 / E2.1 IDF CLOS. H006 PART PLAN - POWER

SCALE: 1/4" = 1'-0"

BRANCH CIRCUIT NOTES:

1. COORDINATE EXACT LOCATION OF ALL DEVICES AND EQUIPMENT W/ARCHITECT PRIOR TO INSTALLATION.
2. REFER TO MECHANICAL PLANS FOR ANY CHANGES AND FOR EXACT LOCATION OF ALL HVAC EQUIPMENT.
3. WIRING IS SHOWN ON DRAWINGS ONLY FOR SPECIFIC ROUTES OR SPECIAL CONDITIONS.
4. WIRING AND CONDUIT SHALL BE REQUIRED BETWEEN ALL OUTLETS INDICATED WITH CIRCUIT NUMBERS AND PANEL DESIGNATIONS. REFER TO SPEC FOR MC CABLE USE.
5. ALTHOUGH ALL BRANCH CIRCUIT WIRE AND CONDUIT IS NOT SHOWN, IT IS THE INTENT OF THESE DOCUMENTS THAT A COMPLETE BRANCH CIRCUIT WIRING SYSTEM BE INSTALLED.
6. ALL BRANCH CIRCUIT CONDUCTORS SHALL BE 98% CONDUCTIVITY, COPPER MINIMUM #12 AWG SIZE, THWN/THHN INSULATION, 600 VOLTS RATED UNLESS OTHERWISE NOTED.
7. ALL RECEPTACLE BRANCH CIRCUITS SHALL HAVE DEDICATED NEUTRALS.
8. TYPICALLY PROVIDE DUPLEX RECEPTACLE & MOUNT ON CLG TILE FACE DOWN FOR LCD PROJECTOR. MOUNT 10'-12' AWAY FROM PROJECTION SCREEN. CENTERED FIELD CONFIRM LOCATION W/ARCH. PRIOR TO ROUGHING.
9. TYPICALLY PROVIDE BELOW SLAB 3/4" PVC FOR RECEPTACLES & 1" PVC FOR TEL/DATA.
10. LOCATE ALL WALL TELEPHONE OUTLETS 12 INCHES AWAY FROM ALL OTHER OUTLET/DEVICES.
11. WINDOW SHADE MOTOR FURNISHED AND INSTALLED BY SHADE SUPPLIER, WIRED BY E.C.. GROUP CONTROLLERS FURNISHED BY SHADE SUPPLIER, INSTALLED AND WIRED BY E.C.. CONFIRM LOCATION WITH SUPPLIER AND ARCHITECT PRIOR TO ROUGHING. KEYED SWITCHES FURNISHED BY SHADE SUPPLIER, INSTALLED AND WIRED BY E.C.. ALL WORK ASSOCIATED WITH MOTORIZED SHADES SHALL BE PROVIDED UNDER ALTERNATE NO.1.(TYPICAL)
12. E.C. SHALL COORDINATE ALL SLEEVES AND CONDUITS LOCATIONS AND ROUTING PRIOR TO INSTALLATION WITH I.T. SUBCONTRACTOR. SO THAT 290' DATA CABLE LENGTH IS NOT EXCEEDED. PROVIDE CONDUITS/SLEEVES AS NECESSARY TO MEET ALL DATA WIRING REQUIREMENTS.

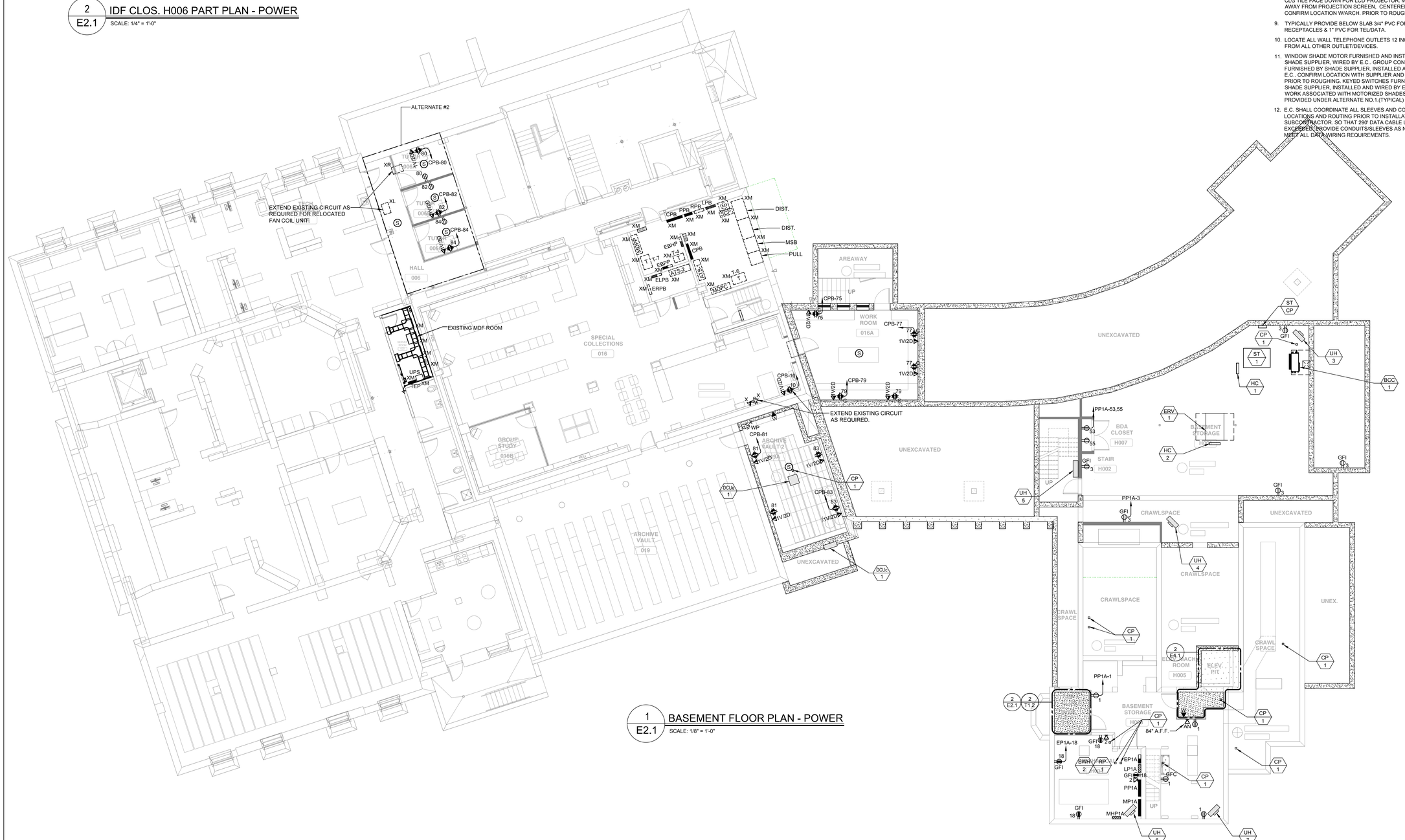

1 / E2.1 BASEMENT FLOOR PLAN - POWER

SCALE: 1/8" = 1'-0"

JOHN ON
ROBERT
A O IATE IN .
AR HITE T

15 PROPERZI WAY
SOMERVILLE, MA
01243 - 3228

GARCIA-GALUSKA-DESOUSA
CONSULTING ENGINEERS INC.
370 FAUNCE CORNER ROAD, DARTMOUTH, MA 02747-1217
508-998-5700 • FAX 508-998-0863 • E-MAIL info@g-g-d.com

Revisions:

CONCORD FREE PUBLIC LIBRARY EXPANSION

CONCORD, MA

Sheet Title:

Basement Floor Plan- Power

Date: 24-Oct-19 Drawn By: MLP

Scale: 1/8"=1'-0" Project No.: 1714

E2.1

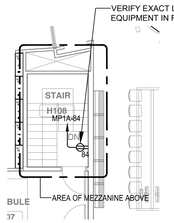

2 / E2.2 PART PLAN -MECHANICAL MEZZANINE

SCALE: 1/8" = 1'-0"

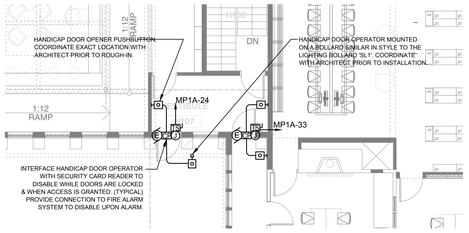

3 / E2.2 PART PLAN - HANDICAP DOOR OPENERS

SCALE: 1/8" = 1'-0"

BRANCH CIRCUIT NOTES:

1. COORDINATE EXACT LOCATION OF ALL DEVICES AND EQUIPMENT W/ARCHITECT PRIOR TO INSTALLATION.
2. REFER TO MECHANICAL PLANS FOR ANY CHANGES AND FOR EXACT LOCATION OF ALL HVAC EQUIPMENT.
3. WIRING IS SHOWN ON DRAWINGS ONLY FOR SPECIFIC ROUTES OR SPECIAL CONDITIONS.
4. WIRING AND CONDUIT SHALL BE REQUIRED BETWEEN ALL OUTLETS INDICATED WITH CIRCUIT NUMBERS AND PANEL DESIGNATIONS. REFER TO SPEC FOR MC CABLE USE.
5. ALTHOUGH ALL BRANCH CIRCUIT WIRE AND CONDUIT IS NOT SHOWN, IT IS THE INTENT OF THESE DOCUMENTS THAT A COMPLETE BRANCH CIRCUIT WIRING SYSTEM BE INSTALLED.
6. ALL BRANCH CIRCUIT CONDUCTORS SHALL BE 98% CONDUCTIVITY, COPPER MINIMUM #12 AWG SIZE, THWN/THHN INSULATION, 600 VOLTS RATED UNLESS OTHERWISE NOTED.
7. ALL RECEPTACLE BRANCH CIRCUITS SHALL HAVE DEDICATED NEUTRALS.
8. TYPICALLY PROVIDE DUPLEX RECEPTACLE & MOUNT ON CLG TILE FACE DOWN FOR LCD PROJECTOR. MOUNT 10'-12' AWAY FROM PROJECTION SCREEN, CENTERED. FIELD CONFIRM LOCATION W/ARCH. PRIOR TO ROUGHING.
9. TYPICALLY PROVIDE BELOW SLAB 3/4" PVC FOR RECEPTACLES & 1" PVC FOR TEL/DATA.
10. LOCATE ALL WALL TELEPHONE OUTLETS 12 INCHES AWAY FROM ALL OTHER OUTLET/DEVICES.
11. WINDOW SHADE MOTOR FURNISHED AND INSTALLED BY SHADE SUPPLIER, WIRED BY E.C.. GROUP CONTROLLERS FURNISHED BY SHADE SUPPLIER, INSTALLED AND WIRED BY E.C.. CONFIRM LOCATION WITH SUPPLIER AND ARCHITECT PRIOR TO ROUGHING. KEYED SWITCHES FURNISHED BY SHADE SUPPLIER, INSTALLED AND WIRED BY E.C.. ALL WORK ASSOCIATED WITH MOTORIZED SHADES SHALL BE PROVIDED UNDER ALTERNATE NO.1.(TYPICAL)
12. E.C. SHALL COORDINATE ALL SLEEVES AND CONDUITS LOCATIONS AND ROUTING PRIOR TO INSTALLATION WITH I.T. SUBCONTRACTOR. SO THAT 290' DATA CABLE LENGTH IS NOT EXCEEDED. PROVIDE CONDUITS/SLEEVES AS NECESSARY TO MEET ALL DATA WIRING REQUIREMENTS.

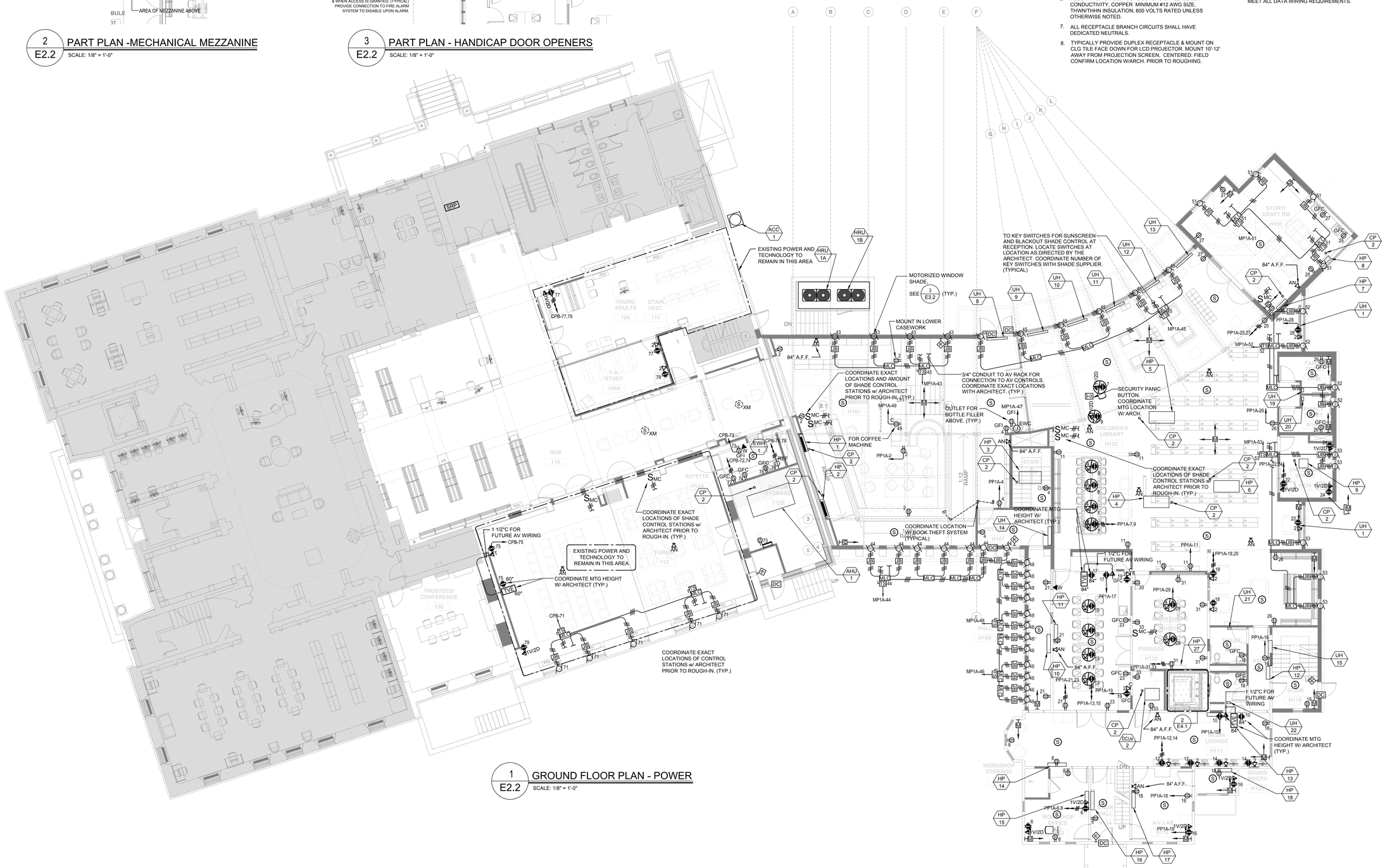

1 / E2.2 GROUND FLOOR PLAN - POWER

SCALE: 1/8" = 1'-0"

JOHN ON ROBERT A O IATE IN . AR HITE T

15 PROPERZI WAY
SOMERVILLE, MA
01243 - 3228

GARCIA-GALUSKA-DESOUSA
CONSULTING ENGINEERS INC.
370 FAUNCE CORNER ROAD, DARTMOUTH, MA 02747-1317
508-998-5700 • FAX 508-998-0883 • E-MAIL info@g-g-d.com

Revisions:

CONCORD FREE PUBLIC LIBRARY EXPANSION

CONCORD, MA

Sheet Title:

Ground Floor Plan-Power

Date: 24-Oct-19 Drawn By: MLP

Scale: 1/8"=1'-0" Project No.: 1714

E2.2

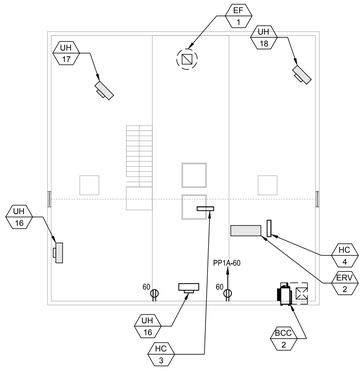

2
E2.3

THIRD FLOOR PLAN - POWER

SCALE: 1/8" = 1'-0"

BRANCH CIRCUIT NOTES:

1. COORDINATE EXACT LOCATION OF ALL DEVICES AND EQUIPMENT W/ARCHITECT PRIOR TO INSTALLATION.
2. REFER TO MECHANICAL PLANS FOR ANY CHANGES AND FOR EXACT LOCATION OF ALL HVAC EQUIPMENT.
3. WIRING IS SHOWN ON DRAWINGS ONLY FOR SPECIFIC ROUTES OR SPECIAL CONDITIONS.
4. WIRING AND CONDUIT SHALL BE REQUIRED BETWEEN ALL OUTLETS INDICATED WITH CIRCUIT NUMBERS AND PANEL DESIGNATIONS. REFER TO SPEC FOR MC CABLE USE.
5. ALTHOUGH ALL BRANCH CIRCUIT WIRE AND CONDUIT IS NOT SHOWN, IT IS THE INTENT OF THESE DOCUMENTS THAT A COMPLETE BRANCH CIRCUIT WIRING SYSTEM BE INSTALLED.
6. ALL BRANCH CIRCUIT CONDUCTORS SHALL BE 98% CONDUCTIVITY, COPPER MINIMUM #12 AWG SIZE, THWN/THHN INSULATION, 600 VOLTS RATED UNLESS OTHERWISE NOTED.
7. ALL RECEPTACLE BRANCH CIRCUITS SHALL HAVE DEDICATED NEUTRALS.
8. TYPICALLY PROVIDE DUPLEX RECEPTACLE & MOUNT ON CLG TILE FACE DOWN FOR LCD PROJECTOR. MOUNT 10'-12" AWAY FROM PROJECTION SCREEN, CENTERED. FIELD CONFIRM LOCATION W/ARCH. PRIOR TO ROUGHING.
9. TYPICALLY PROVIDE BELOW SLAB 3/4" PVC FOR RECEPTACLES & 1" PVC FOR TEL/DATA.
10. LOCATE ALL WALL TELEPHONE OUTLETS 12 INCHES AWAY FROM ALL OTHER OUTLET/DEVICES.
11. WINDOW SHADE MOTOR FURNISHED AND INSTALLED BY SHADE SUPPLIER, WIRED BY E.C. GROUP CONTROLLERS FURNISHED BY SHADE SUPPLIER, INSTALLED AND WIRED BY E.C.. CONFIRM LOCATION WITH SUPPLIER AND ARCHITECT PRIOR TO ROUGHING. KEYED SWITCHES FURNISHED BY SHADE SUPPLIER, INSTALLED AND WIRED BY E.C.. ALL WORK ASSOCIATED WITH MOTORIZED SHADES SHALL BE PROVIDED UNDER ALTERNATE NO.1.(TYPICAL)
12. E.C. SHALL COORDINATE ALL SLEEVES AND CONDUITS LOCATIONS AND ROUTING PRIOR TO INSTALLATION WITH I.T. SUBCONTRACTOR. SO THAT 290' DATA CABLE LENGTH IS NOT EXCEEDED. PROVIDE CONDUITS/SLEEVES AS NECESSARY TO MEET ALL DATA WIRING REQUIREMENTS.

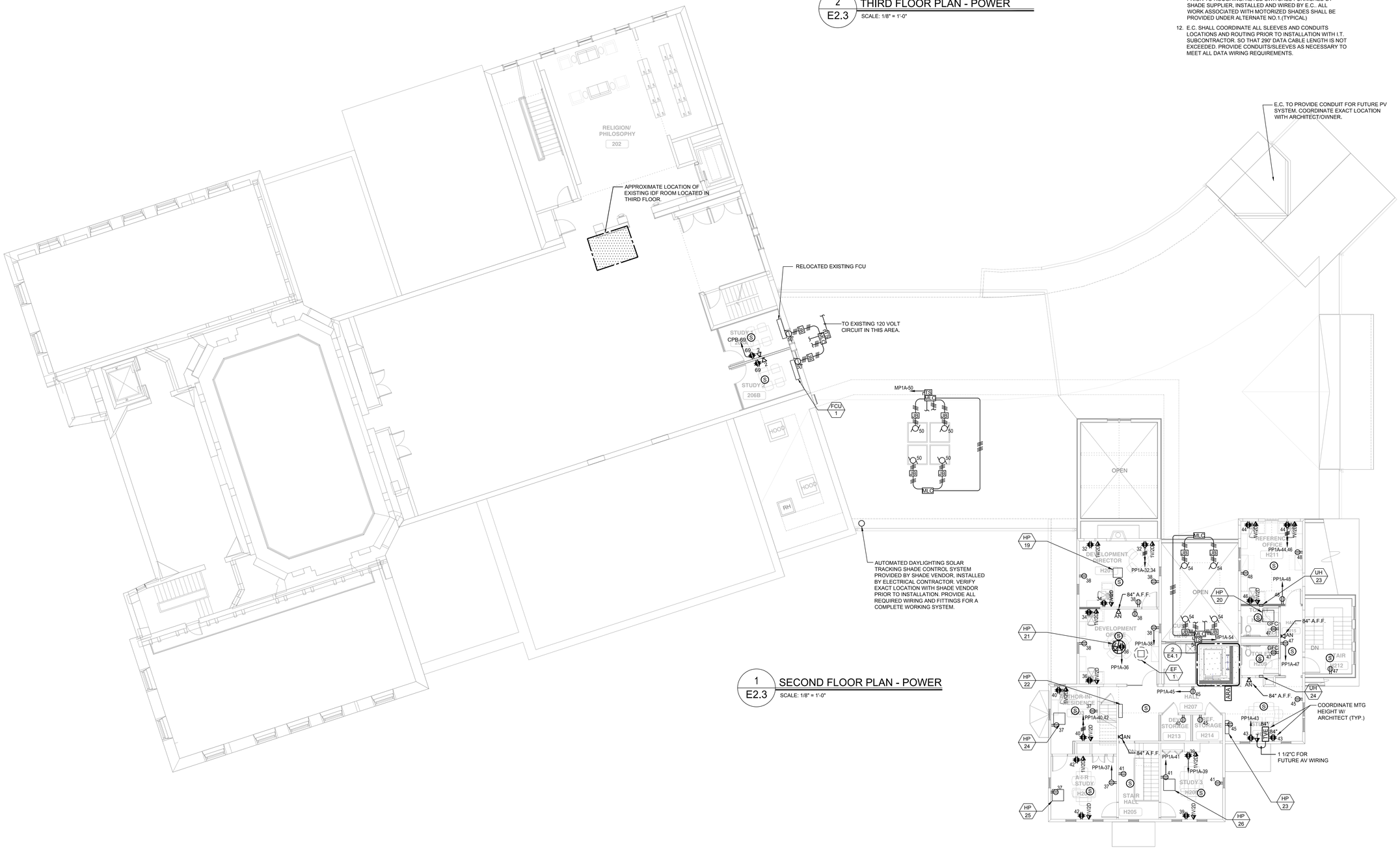

1
E2.3

SECOND FLOOR PLAN - POWER

SCALE: 1/8" = 1'-0"

JOHN ON ROBERT A O IATE IN .
AR HITE T

15 PROPERZI WAY
SOMERVILLE, MA
01243 - 3228

GARCIA-GALUSKA-DESOUSA
CONSULTING ENGINEERS INC.
370 FAUNCE CORNER ROAD, DARTMOUTH, MA 02747-1217
508-998-5700 • FAX 508-998-0883 • E-MAIL info@g-g-d.com

Revisions:

CONCORD FREE PUBLIC LIBRARY EXPANSION

CONCORD, MA

Sheet Title:

Second Floor Plan - Power

Date: 24-Oct-19 Drawn By: MLP

Scale: 1/8"=1'-0" Project No.: 1714

E2.3

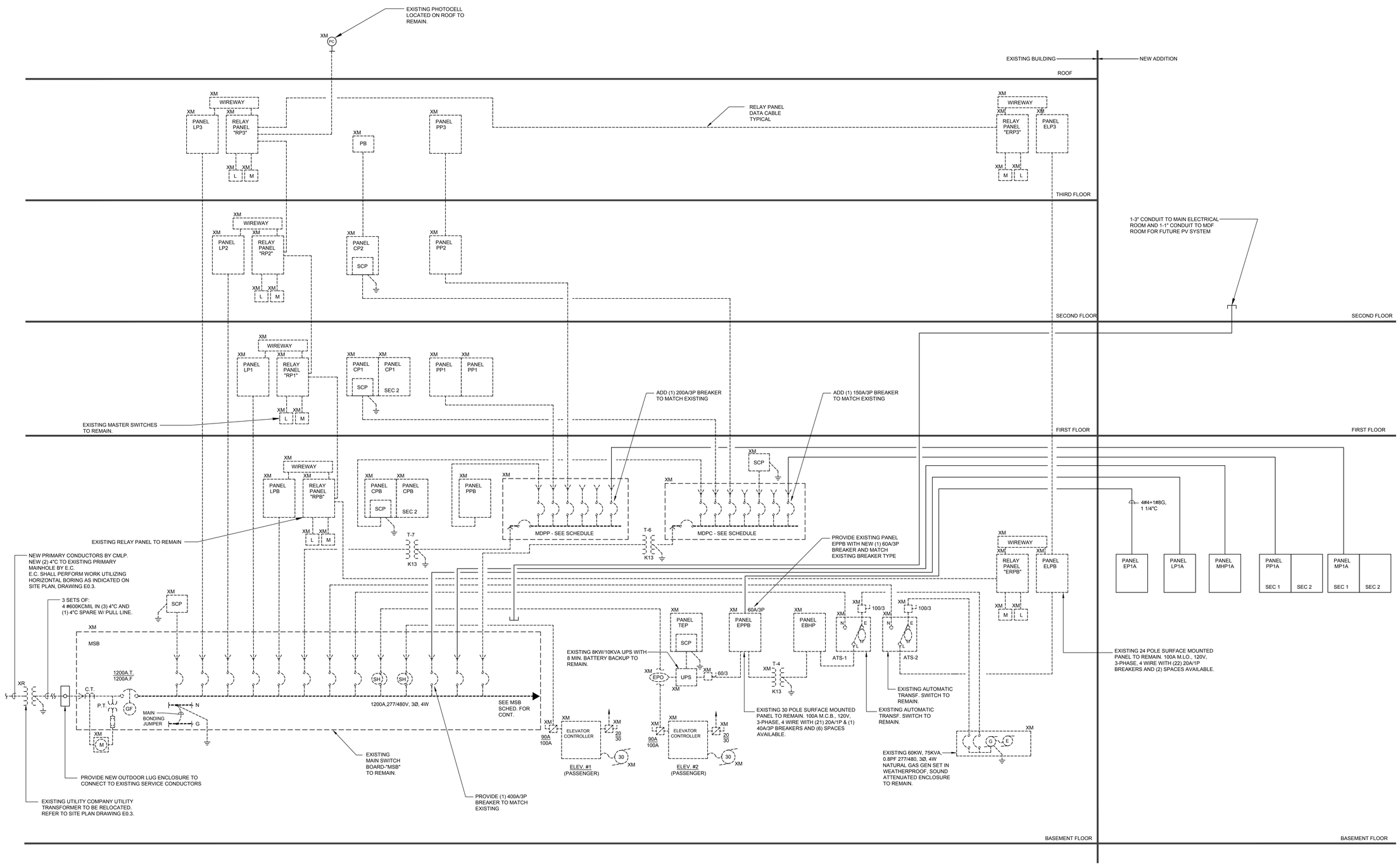

1 / E3.0 POWER RISER DIAGRAM

SCALE: NTS

JOHN ON ROBERT A O IATE IN . AR HITE T

15 PROPERZI WAY
SOMERVILLE, MA
01243 - 3228

GARCIA-GALUSKA-DESOUSA
CONSULTING ENGINEERS INC.
370 FAIRACE CORNER ROAD, DARTMOUTH, MA 02747-1317
508-998-5700 • FAX 508-998-0883 • E-MAIL info@g-g-d.com

Revisions:

CONCORD FREE PUBLIC LIBRARY EXPANSION

CONCORD, MA

Sheet Title:

One Line Diagram

Date: 24-Oct-19 Drawn By: MLP

Scale: 1/8"=1'-0" Project No.: 1714

E3.0

277/480V,3Ø,4W,65KAIC

FRONT ACCESSIBLE

MAIN SWITCHBOARD "MSB" SCHEDULE (75" HIGH) - EXISTING TO REMAIN

	OVER CURRENT DEVICES			CIRCUIT	FEEDER SIZE	COND. SIZE	REMARKS
	No.	TRIP	FRAME				
	-	-	-	FULLY BUSSED PULL SECTION	-	-	
1	-	1200	1200	MAIN BREAKER/CT	SEE RISER		WITH GFI PROTECTION
1	1	60	100	SURGE SUPPRESSOR	EXISTING	EXISTING	PER MFGR. REQUIREMENTS
1	2	100	100	LP3			
1	3	100	100	LP2			
1	4	100	100	LP1			
1	5	100	100	LPB			
1	6	200	200	MDPP VIA T7			
1	7	60	100	ATS-2			
1	8	70	100	ATS-1			
1	9	90	100	ELEVATOR #2			
1	10	90	100	ELEVATOR #1			
1	11	150	150	CH-1			
1	12	100	100	NEW PANEL "LP1A"	4#2&1#8G	1 1/4"	
2	13	200	225	NEW PANEL "MHP1A"	4#3/0&1#6G	2"	
	14	-	225	SPACE PROVISIONS			
1	15	150	200	MDPC VIA T6			

1 EXISTING TO REMAIN.

2 NEW BREAKER, MATCH EXISTING BREAKER TYPE.

120/208V,3Ø,4W,22KAIC

MAIN DISTRIBUTION PANEL "MDPP" SCHEDULE - EXISTING TO REMAIN

	OVER CURRENT DEVICES			CIRCUIT	FEEDER SIZE	COND. SIZE	REMARKS
	No.	TRIP	FRAME				
	-	-	-		-	-	
1	-	400	400	MAIN BREAKER	1	1	
1	1	150	150	PPB	EXISTING	EXISTING	
1	2	150	150	PP1			
1	3	150	150	PP2			
1	4	100	100	SPARE			
2	5	200	225	NEW PANEL "MP1A"	4#3/0&1#6G	2"	
	6		225	SPACE PROVISIONS			
1	7	60	100	AC-2	EXISTING	EXISTING	
	8						
	9						
	10						

1 EXISTING TO REMAIN.

2 NEW BREAKER, MATCH EXISTING BREAKER TYPE.

120/208V,3Ø,4W,22KAIC

MAIN DISTRIBUTION PANEL "MDPC" SCHEDULE - EXISTING TO REMAIN

	OVER CURRENT DEVICES			CIRCUIT	FEEDER SIZE	COND. SIZE	REMARKS
	No.	TRIP	FRAME				
	-	-	-		-	-	
1	-	250	400	MAIN BREAKER	1	1	
1	1	150	150	CPB	EXISTING	EXISTING	
1	2	200	225	CP1			
1	3	100	100	CP2			
1	4	60	100	SURGE SUPPRESSOR			PER MFGR. REQUIREMENTS
1	5	100	100	SPARE			
2	6	150	225	NEW PANEL "PP1A"	5#1/0&1#4G	2"	
	7		225	SPACE PROVISIONS			
	8						
	9						
	10						

1 EXISTING TO REMAIN.

2 NEW BREAKER, MATCH EXISTING BREAKER TYPE.

277/480V,3Ø,4W,65KAIC

PANEL SCHEDULE

	PANEL NO.	LOCATION	MTG	MAIN BUS AMPS	MAIN CB	BRANCH CKT BREAKER (AMPS) 1 POLE 15	1 POLE 20	1 POLE 30	2 POLE 15	2 POLE 20	2 POLE 30	3 POLE 15	3 POLE 20	3 POLE 30	3 POLE 50	TOTAL POLES	OTHERS
1	LP1A	MECHANICAL H004	S	100	MLO		20						2			42	(2) 60A/3P
1	MHP1A	MECHANICAL H004	S	200	MLO		10	15					2			42	(2) 60A/3P
	ELPB	-					6										

1 PROVIDE CURRENT LIMITING BREAKERS. UL LISTED SERIES RATED FOR 65,000A RMS@ RATED VOLTAGE WITH UPSTREAM BREAKERS IS ACCEPTABLE.

120/208V,3Ø,4W,10KAIC

PANEL SCHEDULE

PANEL NO.	LOCATION	MTG	MAIN BUS AMPS	MAIN CB	BRANCH CKT BREAKER (AMPS) 1 POLE 15	1 POLE 20	1 POLE 30	2 POLE 15	2 POLE 20	2 POLE 30	3 POLE 15	3 POLE 20	3 POLE 30	3 POLE 50	TOTAL POLES	OTHERS
PP1A	MECHANICAL H004	S	225	MLO		60									84	
MP1A	MECHANICAL H004	S	225	MLO		36	2		8			3			84	(1) 40A/2P, (1) 50A/2P
EP1A	MECHANICAL H004	S	100	MLO		10	2		3			4			30	
CPB						20		1	1	1			1			

1 PROVIDE 200% NEUTRAL BUS. PANELS TO BE PROVIDED WITH BUILT-IN SURGE SUPPRESSORS.

2 BUILTIN SURGE SUPPRESSION

3 PROVIDE WITH FEED THRU LUGS

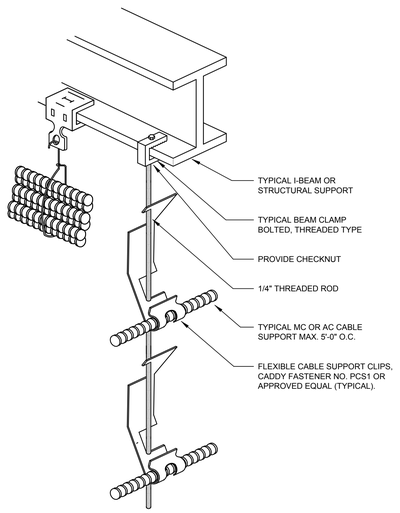

1 / E3.1 TYPICAL MC/AC CABLE SUPPORTING DETAIL

SCALE: N.T.S.

NOTES:

1. SUPPORTING CABLE IS ACCEPTABLE BELOW SUPPORT STEEL OR ABOVE STEEL. COORDINATE MOUNTING LOCATIONS WITH OTHER TRADES AND FIELD CONDITIONS. PROVIDE SUPPORT CLIPS AND THREADED RODES AS REQUIRED FOR A COMPLETE SUPPORT SYSTEM AS INDICATED.
2. SUPPORT CABLES FROM EITHER PARALLEL OR PERPENDICULAR SUPPORT STEEL.
3. BUNDLE A UP TO A MAXIMUM OF (6) SIX CABLES.

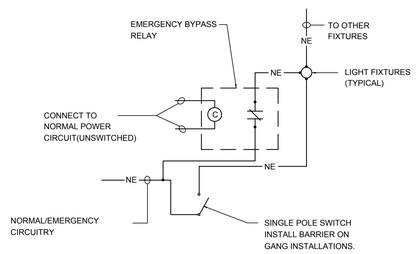

2 / E3.1 EMERGENCY BYPASS RELAY

SCALE: N.T.S.

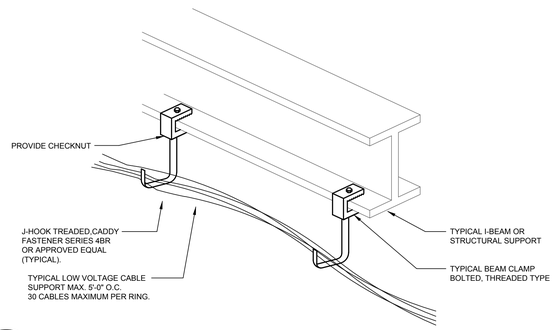

3 / E3.1 TYPICAL LOW VOLTAGE CABLE SUPPORT DETAIL

N.T.S.

NOTES:

1. SUPPORTING CABLE IS ACCEPTABLE BELOW SUPPORT STEEL OR ABOVE STEEL. COORDINATE MOUNTING LOCATIONS WITH OTHER TRADES AND FIELD CONDITIONS. PROVIDE SUPPORT CLIPS AND THREADED RODS AS REQUIRED FOR A COMPLETE SUPPORT SYSTEM AS INDICATED.
2. SUPPORT CABLE EITHER PARALLEL OR PERPENDICULAR TO SUPPORT STEEL.

JOHN ON ROE ERT A O IATE IN . AF HITE T

15 PROPERZI WAY
SOMERVILLE, MA
01243 - 3228

GARCIA-GALUSKA-DESOUSA
CONSULTING ENGINEERS INC.
370 FAUNCE CORNER ROAD, DARTMOUTH, MA 02747-1217
508-998-5700 • FAX 508-998-0883 • E-MAIL info@g-g-d.com

Revisions:

CONCORD FREE PUBLIC LIBRARY EXPANSION

CONCORD, MA

Sheet Title:

Panel Schedule and Details

Date: 24-Oct-19 Drawn By: MLP

Scale: As Noted Project No.: 1714

E3.1

ELECTRICAL SCHEDULE OF MECHANICAL EQUIPMENT

UNIT NO.	DESCRIPTION	LOAD CHARACTERISTICS	VOLT	PH	PANEL CIRCUIT	CIRCUIT BREAKER	FEEDER 1	EQUIPMENT AND CONNECTIONS													REMARKS	
								TS						WP	J	J S WP	VFD	NEMA 3R	E			
ACC-1	AIR COOLED CONDENSING UNIT IN EXISTING BUILDING	22.3 MCA	208	1	CPB-62,64	30A-2P	3#10&1#10G-3/4"C	-	-	X	-	X	-	X	X	X	-	-	-	-	-	
AHU-1	AIR-HANDLING UNIT (INDOOR) IN EXISTING BUILDING	16.3 MCA	208	3	CPB-56,58,60	30A-3P	4#10&1#10G-3/4"C	-	-	X	-	X	-	X	X	X	-	-	-	-	PROVIDE 3#12+1#12G-3/4"C TO ACC-1. ALSO CONNECT CP-2 TO MP1A-31	④
CP-1	CONDENSTATE PUMP	14 W	120	1	-	20A-1P	2#12&1#12G-3/4"C	X	-	-	-	X	-	-	X	-	-	-	-	-	REFER TO DETAIL 1/E3.2 (TYPICAL)	③
CP-2	CONDENSTATE PUMP	50 W	120	1	-	20A-1P	2#12&1#12G-3/4"C	X	-	-	-	X	-	-	X	-	-	-	-	-	REFER TO DETAIL 1/E3.2 (TYPICAL)	③
DCUc-1	DUCTLESS COOLING UNIT IN EXISTING BUILDING	-	208	1	CPB-57,59	20A-2P	3#12&1#12G-3/4"C	-	-	X	-	X	-	X	X	-	-	-	-	-	CONNECT WEATHERPROOF RECEPTACLE TO CPB-65	
DCUe-1	DUCTLESS COOLING UNIT IN EXISTING BUILDING	-	208	1	CPB-61,63	15A-2P	3#12&1#12G-3/4"C	-	-	X	-	X	-	-	X	-	-	-	-	-	PROVIDE 3#12+1#12G-3/4"C TO DCUe-1. ALSO CONNECT CP-1 TO CPB-65	①②③
DCUc-2	DUCTLESS COOLING UNIT	-	208	1	MP1A-15,17	20A-2P	3#12&1#12G-3/4"C	-	-	X	-	X	-	X	X	-	-	-	-	-	CONNECT WEATHERPROOF RECEPTACLE TO MP1A-23	
DCUe-2	DUCTLESS COOLING UNIT	-	208	1	MP1A-19,21	15A-2P	3#12&1#12G-3/4"C	-	-	X	-	X	-	-	X	-	-	-	-	-	PROVIDE 3#12+1#12G-3/4"C TO DCUe-2. ALSO CONNECT CP-1 TO MP1A-23	①②③
EF-1	EXHAUST FAN	1/6 HP	120	1	MP1A-36	20A-1P	2#12&1#12G-3/4"C	X	-	-	-	X	-	-	X	-	-	-	-	-	-	
ERV-1	ENERGY RECOVERY VENTILATION UNIT	24.8 MCA 35 MOP	208	1	MP1A-16,18	40A-2P	3#8&1#10G-3/4"C	-	-	X	-	X	-	-	X	X	-	X	-	-	-	
ERV-2	ENERGY RECOVERY VENTILATION UNIT	3.8 MCA	208	1	MPA1-20,22	20A-2P	3#12&1#12G-3/4"C	-	-	X	-	X	-	-	X	X	-	X	-	-	-	
FC-1	FAN COIL IN EXISTING BUILDING	1/4 HP	120	1	CPB-67	20A-1P	2#12&1#12G-3/4"C	X	-	-	-	X	-	-	X	-	-	-	-	-	ALSO DISCONNECT AND MAKE SAFE EXISTING FC-1	
HC-1	HEATING COIL	12 KW	480	3	MHP1A-1,3,5	20A-3P	4#12&1#12G-3/4"C	-	-	X	-	X	-	-	X	-	-	-	-	-	-	
HC-2	HEATING COIL	12 KW	480	3	MHP1A-2,4,6	20A-3P	4#12&1#12G-3/4"C	-	-	X	-	X	-	-	X	-	-	-	-	-	-	
HC-3	HEATING COIL	2 KW	480	3	MHP1A-7,9,11	20A-3P	4#12&1#12G-3/4"C	-	-	X	-	X	-	-	X	-	-	-	-	-	-	
HC-4	HEATING COIL	3 KW	480	3	MH1A-8,10,12	20A-3P	4#12&1#12G-3/4"C	-	-	X	-	X	-	-	X	-	-	-	-	-	-	
HRU-1A	HEAT (PUMP) RECOVERY UNIT MODULE #1	26 MCA / 40 MOP	480	3	LP1A-31,33,35	40A-3P	4#8&1#10G-1"C	-	-	X	-	X	-	X	X	X	-	-	-	-	CONNECT WEATHERPROOF RECEPTACLE TO MP1A-25	⑥
HRU-1B	HEAT (PUMP) RECOVERY UNIT MODULE #2	26 MCA / 40 MOP	480	3	LP1A-37,39,41	40A-3P	4#8&1#10G-1"C	-	-	X	-	X	-	-	X	-	-	-	-	-	-	
BCC-1	BRANCH CIRCUIT CONTROLLER	2.0 MCA	208	1	MP1A-7,9	20A-2P	3#12&1#12G-3/4"C	-	-	X	-	X	-	-	X	-	-	-	-	-	CP-1. PROVIDE 3/4"C TO MODULES HRU-1A & 1B AND HPS FOR CONTROLS	
HP-1	DUCTLESS SPLIT SYSTEM (INDOOR UNIT)	0.59 MCA	208	1	MP1A-8,10	20A-2P	3#12&1#12G-3/4"C	-	-	X	-	X	-	-	X	-	-	-	-	-	PROVIDE 3#12+1#12G-3/4"C TO MODULES HRU-1A & 1B. ALSO CONNECT CP-1 TO MP1A-27	②③⑥
HP-2	DUCTLESS SPLIT SYSTEM (INDOOR UNIT)	0.59 MCA	208	1	MP1A-8,10	-	3#12&1#12G-3/4"C	-	-	X	-	X	-	-	X	-	-	-	-	-	PROVIDE 3#12+1#12G-3/4"C TO MODULES HRU-1A & 1B. ALSO CONNECT CP-1 TO MP1A-27	②③⑥
HP-3	DUCTLESS SPLIT SYSTEM (INDOOR UNIT)	3.51 MCA	208	1	MP1A-8,10	-	3#12&1#12G-3/4"C	-	-	X	-	X	-	-	X	-	-	-	-	-	PROVIDE 3#12+1#12G-3/4"C TO MODULES HRU-1A & 1B. ALSO CONNECT CP-1 TO MP1A-27	②③⑥
HP-4	DUCTLESS SPLIT SYSTEM (INDOOR UNIT)	2.73 MCA	208	1	MP1A-8,10	-	3#12&1#12G-3/4"C	-	-	X	-	X	-	-	X	-	-	-	-	-	PROVIDE 3#12+1#12G-3/4"C TO MODULES HRU-1A & 1B. ALSO CONNECT CP-1 TO MP1A-27	②③⑥
HP-5	DUCTLESS SPLIT SYSTEM (INDOOR UNIT)	3.51 MCA	208	1	MP1A-11,13	20A-2P	3#12&1#12G-3/4"C	-	-	X	-	X	-	-	X	-	-	-	-	-	PROVIDE 3#12+1#12G-3/4"C TO MODULES HRU-1A & 1B. ALSO CONNECT CP-1 TO MP1A-27	②③⑥
HP-6	DUCTLESS SPLIT SYSTEM (INDOOR UNIT)	3.50 MCA	208	1	MP1A-11,13	-	3#12&1#12G-3/4"C	-	-	X	-	X	-	-	X	-	-	-	-	-	PROVIDE 3#12+1#12G-3/4"C TO MODULES HRU-1A & 1B. ALSO CONNECT CP-1 TO MP1A-27	②③⑥
HP-7	DUCTLESS SPLIT SYSTEM (INDOOR UNIT)	0.48 MCA	208	1	MP1A-11,13	-	3#12&1#12G-3/4"C	-	-	X	-	X	-	-	X	-	-	-	-	-	PROVIDE 3#12+1#12G-3/4"C TO MODULES HRU-1A & 1B. ALSO CONNECT CP-1 TO MP1A-27	②③⑥
HP-8	DUCTLESS SPLIT SYSTEM (INDOOR UNIT)	0.48 MCA	208	1	MP1A-11,13	-	3#12&1#12G-3/4"C	-	-	X	-	X	-	-	X	-	-	-	-	-	PROVIDE 3#12+1#12G-3/4"C TO MODULES HRU-1A & 1B. ALSO CONNECT CP-1 TO MP1A-27	②③⑥
HP-9	DUCTLESS SPLIT SYSTEM (INDOOR UNIT)	0.28 MCA	208	1	MP1A-7,9	-	3#12&1#12G-3/4"C	-	-	X	-	X	-	-	X	-	-	-	-	-	PROVIDE 3#12+1#12G-3/4"C TO MODULES HRU-1A & 1B. ALSO CONNECT CP-1 TO MP1A-27	②③⑥
HP-10	DUCTLESS SPLIT SYSTEM (INDOOR UNIT)	0.59 MCA	208	1	MP1A-7,9	-	3#12&1#12G-3/4"C	-	-	X	-	X	-	-	X	-	-	-	-	-	PROVIDE 3#12+1#12G-3/4"C TO MODULES HRU-1A & 1B. ALSO CONNECT CP-1 TO MP1A-27	②③⑥
HP-11	DUCTLESS SPLIT SYSTEM (INDOOR UNIT)	0.34 MCA	208	1	MP1A-7,9	-	3#12&1#12G-3/4"C	-	-	X	-	X	-	-	X	-	-	-	-	-	PROVIDE 3#12+1#12G-3/4"C TO MODULES HRU-1A & 1B. ALSO CONNECT CP-1 TO MP1A-27	②③⑥
HP-12	DUCTLESS SPLIT SYSTEM (INDOOR UNIT)	0.32 MCA	208	1	MP1A-7,9	-	3#12&1#12G-3/4"C	-	-	X	-	X	-	-	X	-	-	-	-	-	PROVIDE 3#12+1#12G-3/4"C TO MODULES HRU-1A & 1B. ALSO CONNECT CP-1 TO MP1A-27	②③⑥
HP-13	DUCTLESS SPLIT SYSTEM (INDOOR UNIT)	0.40 MCA	208	1	MP1A-7,9	-	3#12&1#12G-3/4"C	-	-	X	-	X	-	-	X	-	-	-	-	-	PROVIDE 3#12+1#12G-3/4"C TO MODULES HRU-1A & 1B. ALSO CONNECT CP-1 TO MP1A-27	②③⑥
HP-14	DUCTLESS SPLIT SYSTEM (INDOOR UNIT)	0.40 MCA	208	1	MP1A-7,9	-	3#12&1#12G-3/4"C	-	-	X	-	X	-	-	X	-	-	-	-	-	PROVIDE 3#12+1#12G-3/4"C TO MODULES HRU-1A & 1B. ALSO CONNECT CP-1 TO MP1A-27	②③⑥
HP-15	DUCTLESS SPLIT SYSTEM (INDOOR UNIT)	0.34 MCA	208	1	MP1A-7,9	-	3#12&1#12G-3/4"C	-	-	X	-	X	-	-	X	-	-	-	-	-	PROVIDE 3#12+1#12G-3/4"C TO MODULES HRU-1A & 1B. ALSO CONNECT CP-1 TO MP1A-27	②③⑥
HP-16	DUCTLESS SPLIT SYSTEM (INDOOR UNIT)	0.32 MCA	208	1	MP1A-7,9	-	3#12&1#12G-3/4"C	-	-	X	-	X	-	-	X	-	-	-	-	-	PROVIDE 3#12+1#12G-3/4"C TO MODULES HRU-1A & 1B. ALSO CONNECT CP-1 TO MP1A-27	②③⑥
BCC-2	BRANCH CIRCUIT CONTROLLER	2.0 MCA	208	1	MP1A-12,14	20A-2P	3#12&1#12G-3/4"C	-	-	X	-	X	-	-	X	-	-	-	-	-	CP-1. PROVIDE 3/4"C TO MODULES HRU-1A & 1B AND HPS FOR CONTROLS	
HP-17	DUCTLESS SPLIT SYSTEM (INDOOR UNIT)	0.32 MCA	208	1	MP1A-12,14	-	3#12&1#12G-3/4"C	-	-	X	-	X	-	-	X	-	-	-	-	-	PROVIDE 3#12+1#12G-3/4"C TO MODULES HRU-1A & 1B. ALSO CONNECT CP-1 TO MP1A-27	②③⑥
HP-18	DUCTLESS SPLIT SYSTEM (INDOOR UNIT)	0.32 MCA	208	1	MP1A-12,14	-	3#12&1#12G-3/4"C	-	-	X	-	X	-	-	X	-	-	-	-	-	PROVIDE 3#12+1#12G-3/4"C TO MODULES HRU-1A & 1B. ALSO CONNECT CP-1 TO MP1A-27	②③⑥
HP-19	DUCTLESS SPLIT SYSTEM (INDOOR UNIT)	0.28 MCA	208	1	MP1A-12,14	-	3#12&1#12G-3/4"C	-	-	X	-	X	-	-	X	-	-	-	-	-	PROVIDE 3#12+1#12G-3/4"C TO MODULES HRU-1A & 1B. ALSO CONNECT CP-1 TO MP1A-27	②③⑥
HP-20	DUCTLESS SPLIT SYSTEM (INDOOR UNIT)	1.45 MCA	208	1	MP1A-12,14	-	3#12&1#12G-3/4"C	-	-	X	-	X	-	-	X	-	-	-	-	-	PROVIDE 3#12+1#12G-3/4"C TO MODULES HRU-1A & 1B. ALSO CONNECT CP-1 TO MP1A-27	②③⑥
HP-21	DUCTLESS SPLIT SYSTEM (INDOOR UNIT)	0.45 MCA	208	1	MP1A-12,14	-	3#12&1#12G-3/4"C	-	-	X	-	X	-	-	X	-	-	-	-	-	PROVIDE 3#12+1#12G-3/4"C TO MODULES HRU-1A & 1B. ALSO CONNECT CP-1 TO MP1A-27	②③⑥
HP-22	DUCTLESS SPLIT SYSTEM (INDOOR UNIT)	0.32 MCA	208	1	MP1A-12,14	-	3#12&1#12G-3/4"C	-	-	X	-	X	-	-	X	-	-	-	-	-	PROVIDE 3#12+1#12G-3/4"C TO MODULES HRU-1A & 1B. ALSO CONNECT CP-1 TO MP1A-27	②③⑥
HP-23	DUCTLESS SPLIT SYSTEM (INDOOR UNIT)	0.34 MCA	208	1	MP1A-12,14	-	3#12&1#12G-3/4"C	-	-	X	-	X	-	-	X	-	-	-	-	-	PROVIDE 3#12+1#12G-3/4"C TO MODULES HRU-1A & 1B. ALSO CONNECT CP-1 TO MP1A-27	②③⑥
HP-24	DUCTLESS SPLIT SYSTEM (INDOOR UNIT)	1.20 MCA	208	1	MP1A-12,14	-	3#12&1#12G-3/4"C	-	-	X	-	X	-	-	X	-	-	-	-	-	PROVIDE 3#12+1#12G-3/4"C TO MODULES HRU-1A & 1B. ALSO CONNECT CP-1 TO MP1A-27	②③⑥
HP-25	DUCTLESS SPLIT SYSTEM (INDOOR UNIT)	1.20 MCA	208	1	MP1A-12,14	-	3#12&1#12G-3/4"C	-	-	X	-	X	-	-	X	-	-	-	-	-	PROVIDE 3#12+1#12G-3/4"C TO MODULES HRU-1A & 1B. ALSO CONNECT CP-1 TO MP1A-27	②③⑥
HP-26	DUCTLESS SPLIT SYSTEM (INDOOR UNIT)	1.20 MCA	208	1	MP1A-12,14	-	3#12&1#12G-3/4"C	-	-	X	-	X	-	-	X	-	-	-	-	-	PROVIDE 3#12+1#12G-3/4"C TO MODULES HRU-1A & 1B. ALSO CONNECT CP-1 TO MP1A-27	②③⑥
HP-27	DUCTLESS SPLIT SYSTEM (INDOOR UNIT)	0.48 MCA	208	1	MP1A-7,9	-	3#12&1#12G-3/4"C	-	-	X	-	X	-	-	X	-	-	-	-	-	PROVIDE 3#12+1#12G-3/4"C TO MODULES HRU-1A & 1B. ALSO CONNECT CP-1 TO MP1A-27	②③⑥
UH-1	UNIT HEATER IN GROUND FLOOR	1.225 KW	277	1	MHP1A-20	20A-1P	2#12&1#12G-3/4"C	X	-	-	-	X	-	-	X	-	-	-	-	-	-	
UH-2	UNIT HEATER IN GROUND FLOOR	1.225 KW	277	1	MHP1A-22	20A-1P	2#12&1#12G-3/4"C	X	-	-	-	X	-	-	X	-	-	-	-	-	-	
UH-3	UNIT HEATER IN BASEMENT	5 KW	277	1	MHP1A-24	30A-1P	2#10&1#10G-3/4"C	X	-	-	-	X	-	-	X	-	-	-	-	-	-	
UH-4	UNIT HEATER IN BASEMENT	5 KW	277	1	MHP1A-25	30A-1P	2#10&1#10G-3/4"C	X	-	-	-	X	-	-	X	-	-	-	-	-	-	
UH-5	UNIT HEATER IN BASEMENT	6 KW	277	1	MHP1A-26	30A-1P	2#10&1#10G-3/4"C	X	-	-	-	X	-	-	X	-	-	-	-	-	-	
UH-6	UNIT HEATER IN BASEMENT	5 KW	277	1	MHP1A-27	30A-1P	2#10&1#10G-3/4"C	X	-	-	-	X	-	-	X	-	-	-	-	-	-	
UH-7	UNIT HEATER IN BASEMENT	5 KW	277	1	MHP1A-28	30A-1P	2#10&1#10G-3/4"C	X	-	-	-	X	-	-	X	-	-	-	-	-	-	
UH-8	UNIT HEATER IN GROUND FLOOR	.75 KW	120	1	MP1A-26	20A-1P	2#12&1#12G-3/4"C	X	-	-	-	X	-	-	X	-	-	-	-	-	-	
UH-9	UNIT HEATER IN GROUND FLOOR	.75 KW	120	1	MP1A-26	-	2#12&1#12G-3/4"C	X	-	-	-	X	-	-	X	-	-	-	-	-	-	
UH-10	UNIT HEATER IN GROUND FLOOR	.75 KW	120	1	MP1A-28	20A-1P	2#12&1#12G-3/4"C	X	-	-	-	X	-	-	X	-	-	-	-	-	-	
UH-11	UNIT HEATER IN GROUND FLOOR	.75 KW	120	1	MP1A-28	-	2#12&1#12G-3/4"C	X	-	-	-	X	-	-	X	-	-	-	-	-	-	
UH-12	UNIT HEATER IN GROUND FLOOR	.75 KW	120	1	MP1A-30	20A-1P	2#12&1#12G-3/4"C	X	-	-	-	X	-	-	X	-	-	-	-	-	-	
UH-13	UNIT HEATER IN GROUND FLOOR	.75 KW	120	1	MP1A-30	-	2#12&1#12G-3/4"C	X	-	-	-	X	-	-	X	-	-	-	-	-	-	
UH-14	UNIT HEATER IN GROUND FLOOR	6 KW	277	1	MHP1A-8	30A-1P	2#10&1#10G-3/4"C	X	-	-	-	X	-	-	X	-	-	-	-	-	-	
UH-15	UNIT HEATER IN GROUND FLOOR	6 KW	277	1	MHP1A-9	30A-1P	2#10&1#10G-3/4"C	X	-	-	-	X	-	-	X	-	-	-	-	-	-	
UH-16	UNIT HEATER IN ATTIC SPACE	10 KW	480	3	MHP1A-13,15,17	20A-3P	4#12&1#12G-3/4"C	-	-	X	-	X	-	-	X	-	-	-	-	-	-	
UH-17	UNIT HEATER IN ATTIC SPACE	10 KW	480	3	MHP1A-14,16,18	20A-3P	4#12&1#12G-3/4"C	-	-	X	-	X	-	-	X	-	-	-	-	-	-	
UH-18	UNIT HEATER IN ATTIC SPACE	10 KW	480	3	MHP1A-19,21,23	20A-3P	4#12&1#12G-3/4"C	-	-	X	-	X	-	-	X	-	-	-	-	-	-	
UH-19	UNIT HEATER IN TOILET ROOM H106	.75 KW	120	1	MP1A-32	20A-1P	2#12&1#12G-3/4"C	X	-	-	-	X	-	-	X	-	-	-	-	-	-	
UH-20	UNIT HEATER IN TOILET ROOM H105	.75 KW	120	1	MP1A-32	-	2#12&1#12G-3/4"C	X	-	-	-	X	-	-	X	-	-	-	-	-	-	
UH-21	UNIT HEATER IN TOILET ROOM H117	.75 KW	120	1	MP1A-34	20A-1P	2#12&1#12G-3/4"C	X	-	-	-	X	-	-	X	-	-	-	-	-	-	
UH-22	UNIT HEATER IN TOILET ROOM H116	.75 KW	120	1	MP1A-34	-	2#12&1#12G-3/4"C	X	-	-	-	X	-	-	X	-	-	-	-	-	-	
UH-23	UNIT HEATER IN TOILET ROOM H208	.75 KW	120	1	MP1A-38	20A-1P	2#12&1#12G-3/4"C	X	-	-	-	X	-	-	X	-	-	-	-	-	-	
UH-24	UNIT HEATER IN TOILET ROOM H209	.75 KW	120	1	MP1A-38	-	2#12&1#12G-3/4"C	X	-	-	-	X	-	-	X	-	-	-	-	-	-	

MECHANICAL SCHEDULE GENERAL NOTES:

1. DUCT SMOKE DETECTORS SHALL BE PROVIDED ON RETURN DUCT FOR ALL MECHANICAL UNITS OVER 2000CFM. PROVIDE DUCT SMOKE ON RETURN AND SUPPLY DUCTWORK FOR ALL MECHANICAL UNITS OVER 15000 CFM. PROVIDE REMOTE TEST STATION WITH EACH DETECTOR. LOCATION OF TEST STATION SHALL BE ADJACENT TO THE FACP. DUCT SMOKES TO INITIATE ALARM.
2. PROVIDE FLEXIBLE CONNECTION TO EQUIPMENT REFER TO SPECIFICATIONS.
3. CONTROLLERS AND DISCONNECT DEVICES SHALL BE NRTL RATED FOR USE WITH A DESIGN E MOTOR WITH A HORSE POWER RATING NOT LESS THAN 1.4 TIMES THE MOTOR HORSE POWER. (REFER TO ELECTRICAL CODE ARTICLE 430).
4. TWO SPEED MOTORS SHALL HAVE TWO MOTOR BRANCH CIRCUITS AND SIX POLE DISCONNECTS.
5. WHERE INDICATED PROVIDE WEATHERPROOF DUPLEX RECEPTACLES AT MECHANICAL EQUIPMENT. PROVIDE 3/4"C. WITH 2#12+#12G AWG TO NEAREST PANEL AND CONNECT TO 20A/1P CIRCUIT BREAKER UNLESS OTHERWISE INDICATED.
6. TYPICALLY LOCATE STARTERS IN ELECTRIC ROOM (NEAR PANEL).
7. ALL EXTERIOR MOUNTED DISCONNECT SWITCHES, JUNCTION/PULL BOXES, RACEWAYS, FLEXIBLE CONNECTION TO EQUIPMENT, ETC. SHALL BE NEMA "3R."
8. THE E.C. SHALL PROVIDE NEMA 7 DISCONNECT SWITCHES AND SEAL FITTINGS AT EXPLOSION PROOF FANS.
9. WHERE INDICATED PROVIDE 120 VOLT CIRCUIT FOR RECEPTACLE AND LIGHT FIXTURE TYPE "J" AT ROOF TOP UNIT AS NOTED. TYPICALLY CONNECT TO NEAREST 120 VOLT RECEPTACLE CIRCUIT UNLESS OTHERWISE INDICATED.
10. ALL VFD'S SHALL BE PROVIDED WITH CONNECTIONS TO BACNET DATA COMMUNICATION PROTOCOL FOR BUILDING AUTOMATION AND CONTROL NETWORK. COORDINATE WITH ATC CONTRACTOR.

MECHANICAL SCHEDULE KEY NOTES:

1. PROVIDE 3/4"CONDUIT W/PULL WIRE BETWEEN INDOOR UNIT & OUTDOOR UNIT FOR EACH SPLIT SYSTEM.
2. PROVIDE HARD CONNECTION FOR CONDENSATE PUMP (CP-1 OR CP-2). CONNECT TO NEAREST 120V, 1Ø BRANCH CIRCUIT UNLESS OTHERWISE INDICATED. PROVIDE THERMAL SWITCH AT UNIT. FIELD COORDINATE EXACT LOCATION WITH HVAC.

   SEE DETAIL 1/EF3.04
3. REFER TO MECHANICAL DRAWINGS FOR EXACT LOCATION OF CONDENSATE PUMPS CP-1 OR CP-2.
4. VFD FURNISHED INTEGRAL WITH UNIT BY HVAC EQUIPMENT SUPPLIER. SINGLE POINT CONNECTION BY E.C.
5. EMERGENGY BOILER SHUT OFF SWITCH LOCATED OUTSIDE OF BOILER ROOM AND MOUNTED IN STOPPER II COVER, INTERLOCK WITH BOILER CONTROL PANEL. MOUNT 72" AFF AND COORDINATE EXACT LOCATION IN FIELD WITH ARCHITECT.
6. PROVIDE 3/4"CONDUIT W/PULL WIRE BETWEEN INDOOR UNITS, CONTROLLER AND OUTDOOR UNITS FOR EACH SYSTEM.

ELECTRICAL SCHEDULE OF PLUMBING EQUIPMENT

UNIT NO.	DESCRIPTION	UNIT LOCATION	LOAD CHARACTERISTICS	VOLT	PH	PANEL CIRCUIT	CIRCUIT BREAKER	FEEDER	EQUIPMENT AND CONNECTIONS										REMARKS	
									TS							J	J S WP			
EWH-1	ELECTRIC WATER HEATER	KITCHEN 112A	8.3 KW	208	1	MP1A-39,41	50A-2P	3#6+1#10G-3/4"C	-	-	-	X	X	-	-	X	-	-	-	
EWH-2	ELECTRIC WATER HEATER	MECHANICAL RM H004	3.5 KW	208	1	MP1A-40,42	30A-2P	3#10+1#10G-3/4"C	-	-	-	X	X	-	-	X	-	-	-	
RP-1	RE-CIRC. PUMP	MECHANICAL RM H004	1/6 HP	120	1	MP1A-37	20A-1P	2#12+1#12G-3/4"C	X	-	-	-	X	-	-	X	-	-	-	①②④
ST-1	STORM WATER PUMPS	STORAGE RM H003	(2) 3/4 HP	208	3	EP1A-7,9,11	20A-3P	4#12+1#12G-3/4"C	-	-	-	X	X	-	-	X	-	-	REFER TO DETAIL 2/E3.2	⑤
EWC	DRINKING FAUNTAIN (P-4)	REFER TO FLOOR PLANS	-	120	1	REFER TO FLOOR PLANS	③	2#12+1#12G-3/4"C	-	-	-	-	-	-	(2) X	-	-	-	REFER TO FLOOR PLANS FOR CONNECTION & CIRCUITRY	

PLUMBING SCHEDULE KEY NOTES:

1. PUMP WILL RUN VIA DDC (BUILDING MANAGEMENT SYSTEM) SYSTEM.
2. AQUASTAT FURNISHED AND INSTALLED BY PC, 120V CONNECTION BY EC.
3. PROVIDE GFCI TYPE CIRCUIT BREAKER TO FEED EWC CIRCUITS.
4. CONNECT TO BMS SYSTEM WITH 3#12AWG. FINAL CONNECTION BY ATC CONTRACTOR.
5. ALARM WILL RUN VIA DDC SYSTEM. CONNECT TO BMS SYSTEM WITH 3#12AWG. FINAL CONNECTION BY ATC CONTRACTOR.

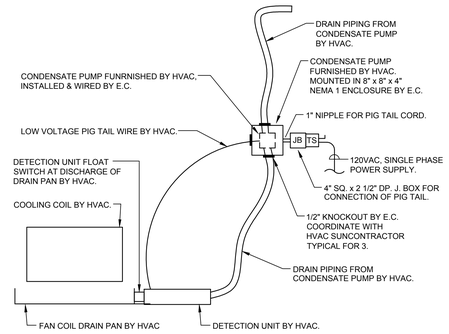

1 / E3.2 CONDENSATE PUMP (CP-1 OR CP-2) WIRING DETAIL

SCALE : N.T.S.

NOTE:

1. WIRING MAY VARY BY MANUFACTURER. FIELD CONFIRM WITH APPROVED SHOP DRAWINGS PRIOR TO ROUGHING.

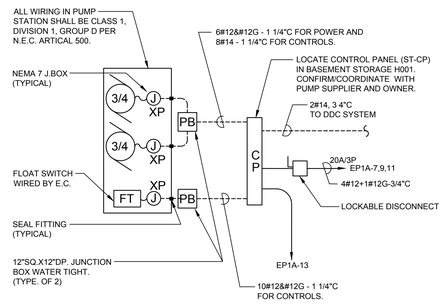

2 / E3.2 STORM WATER PUMPS DETAIL

SCALE: N.T.S.

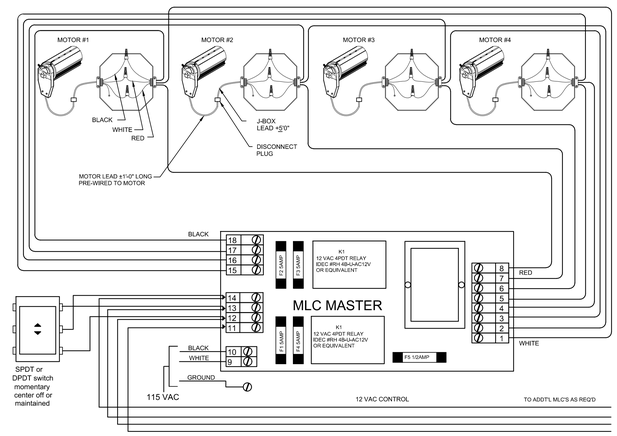

3 / E3.2 MOTOR LOGIC CONTROLLER (MLC) WIRING DIAGRAM

SCALE: N.T.S.

JOHN ON ROBERT A O IATE IN . ARCHITECT

15 PROPERZI WAY
SOMERVILLE, MA
01243 - 3228

GARCIA-GALUSKA-DESOUSA
CONSULTING ENGINEERS INC.
370 FAUNCE CORNER ROAD, DARTMOUTH, MA 02747-1217
508-998-5700 • FAX 508-998-0883 • E-MAIL info@g-g-d.com

Revisions:

CONCORD FREE PUBLIC LIBRARY EXPANSION

CONCORD, MA

Sheet Title:

Mechanical Schedule and Details

Date: 24-Oct-19 Drawn By: MLP

Scale: As Noted Project No.: 1714

E3.2

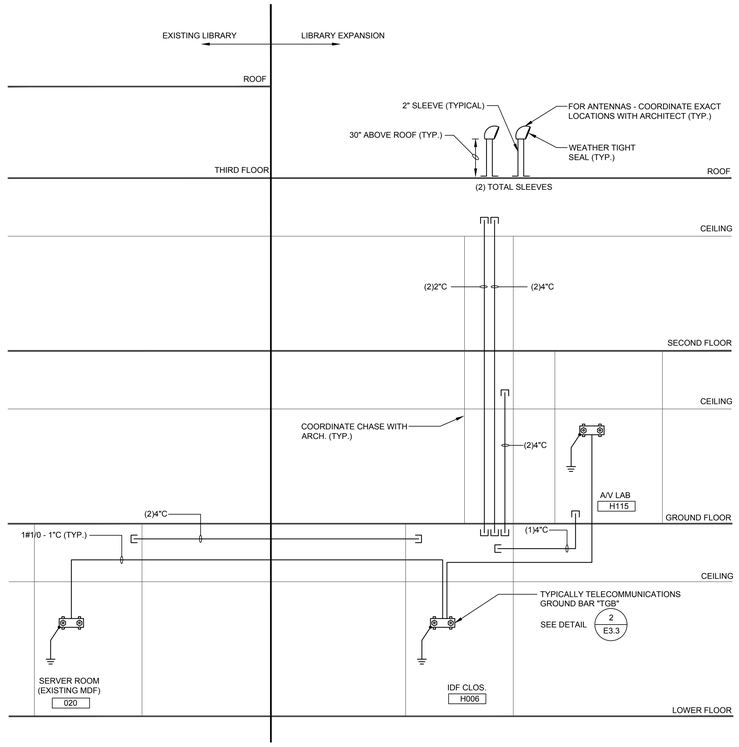

1 / E3.3 TELECOMMUNICATIONS CONDUIT & GROUNDING RISER DIAGRAM

SCALE: N.T.S.

1. COORDINATE ALL SLEEVE LOCATIONS WITH TELECOMMUNICATIONS CONTRACTOR PRIOR TO INSTALLATION.

2. COORDINATE ALL CONDUIT ROUTING WITH TELECOMMUNICATIONS CONTRACTOR. PROVIDE PULL BOXES WHERE CONDUIT BEND EXCEEDS A TOTAL OF 180 DEGREES OR DISTANCE EXCEEDS 150'. ALWAYS ALIGN CONDUITS ON OPPOSITE ENDS OF PULL BOX.

3. PULL BOX SIZES FOR 4" CONDUITS SHALL BE MINIMUM 15" WIDE X 60" LONG X 8" DEEP. INCREASE WIDTH OF PULL BOX 8" FOR EVERY ADDITIONAL 4" CONDUIT.

4. ALL CONDUIT BENDS SHALL BE MINIMUM 36" RADIUS.

5. DO NOT RUN CONDUITS PARALLEL WITH POWER CONDUITS. MAINTAIN MINIMUM OF 4' CLEARANCE.

6. E.C. SHALL BOND ALL CABLE TRAY TO "TGB" IN RESPECTIVE DATA ROOM WITH #6 GROUND. THE CABLE TRAY SHALL BE ELECTRICALLY CONTINUOUS THROUGH. ENTIRE RUN INCLUDING ALL FITTINGS.

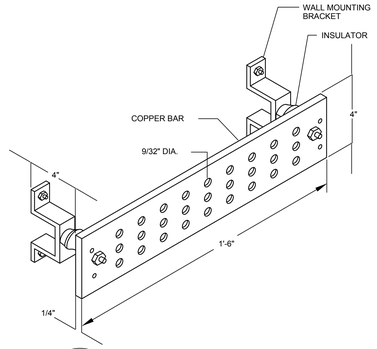

2 / E3.3 GROUND BUS DETAIL

SCALE: N.T.S.

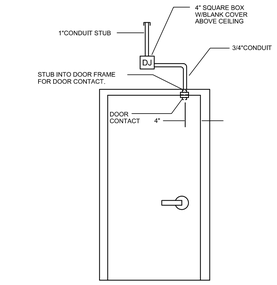

3 / E3.3 TYPICAL DOOR WITHOUT ACCESS CONTROL

SCALE: N.T.S.

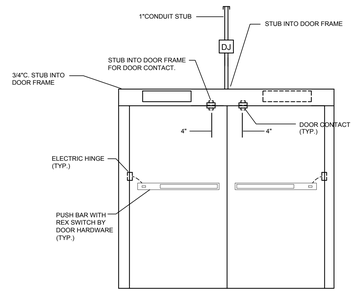

4 / E3.3 TYPICAL DOOR WITHOUT ACCESS CONTROL

SCALE: N.T.S.

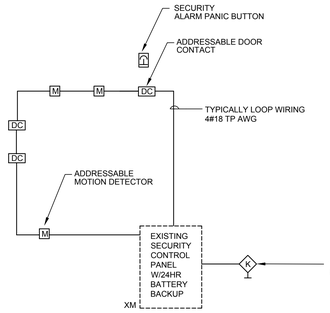

SECURITY PARTITION SCHEDULE

PARTITION NO.	DESCRIPTION
1	EXISTING BASEMENT LEVEL
2	EXISTING FIRST FLOOR LEVEL
3	EXISTING SECOND FLOOR LEVEL
4	EXISITNG THIRD FLOOR LEVEL
5	NEW LIBRARY EXPANSION

NOTES:

1. SYSTEM SHALL BE ADDRESSABLE TYPE PROVIDE CUSTOM ZONING AND PARTITION PER OWNERS REQUIREMENTS
2. ALL WIRING SHALL BE IN 3/4" MINIMUM EMT. COORDINATE WITH SYSTEM SUPPLIER AND OWNER AND SUBMIT COMPLETE FLOOR PLANS AND RISERS AS PART OF SHOP DRAWING
3. REFER TO FLOOR PLANS FOR EXACT QUANTITY OF DEVICES.
4. INTERFACE WITH LIGHTING CONTROLS SO THAT AN ALARM CONDITION WILL TURN ALL LIGHTING "ON".

5 / E3.3 SECURITY RISER

SCALE: N.T.S.

JOHN ON ROE ERT A O IATE IN . AF HITE T
15 PROPERZI WAY
SOMERVILLE, MA
01243 - 3228

GARCIA-GALUSKA-DESOUSA
CONSULTING ENGINEERS INC.
370 FAUNCE CORNER ROAD, DARTMOUTH, MA 02747-1217
508-998-5700 • FAX 508-998-0883 • E-MAIL info@g-g-d.com

Revisions:

CONCORD FREE PUBLIC LIBRARY EXPANSION

CONCORD, MA

Sheet Title:

Electrical Details

Date: 24-Oct-19 Drawn By: MLP

Scale: As Noted Project No.: 1714

E3.3

ROOM SPACING FOR CEILING-MOUNTED VISIBLE APPLIANCES		
MAXIMUM ROOM SIZE	MAXIMUM LENS HEIGHT	MINIMUM REQUIRED LIGHT OUTPUT (EFFECTIVE INTENSITY) ; ONE LIGHT (cd)
20' x 20'	10	15
30' x 30'	10	30
40' x 40'	10	60
44' x 44'	10	75
50' x 50'	10	95
53' x 53'	10	110
55' x 55'	10	115
59' x 59'	10	135
63' x 63'	10	150
68' x 68'	10	177
70' x 70'	10	185
20' x 20'	20	30
30' x 30'	20	45
44' x 44'	20	75
46' x 46'	20	80
50' x 50'	20	95
53' x 53'	20	110
55' x 55'	20	115
59' x 59'	20	135
63' x 63'	20	150
68' x 68'	20	177
70' x 70'	20	185
20' x 20'	30	55
30' x 30'	30	75
50' x 50'	30	95
53' x 53'	30	110
55' x 55'	30	115
59' x 59'	30	135
63' x 63'	30	150
68' x 68'	30	177
70' x 70'	30	185

ROOM SPACING FOR WALL-MOUNTED VISIBLE APPLIANCES			
	MINIMUM REQUIRED LIGHT OUTPUT EFFECTIVE INTENSITY (cd)		
MAXIMUM ROOM SIZE	ONE LIGHT PER ROOM (CEILING HEIGHT)	TWO LIGHTS PER ROOM (LOCATED ON OPPOSITE WALLS)	FOUR LIGHTS PER ROOM ONE LIGHT PER WALLS
20' x 20'	15	NA	NA
28' x 28'	30	UNKNOWN	NA
30' x 30'	34	15	NA
40' x 40'	60	30	15
45' x 45'	75	UNKNOWN	19
50' x 50'	94	60	30
54' x 54'	110	UNKNOWN	30
55' x 55'	115	UNKNOWN	28
60' x 60'	135	95	30
63' x 63'	150	UNKNOWN	37
68' x 68'	177	UNKNOWN	43
70' x 70'	184	95	60
80' x 80'	240	135	60
90' x 90'	304	185	95
100' x 100'	375	240	95
110' x 110'	455	240	135
120' x 120'	540	305	135
130' x 130'	635	375	185

F.A ZONE SCHEDULE	
ZONE	DESCRIPTION
1	EXISTING SPRINKLER ZONE BASEMENT FLOOR
2	EXISTING SPRINKLER ZONE FIRST FLOOR
3	EXISTING SPRINKLER ZONE SECOND FLOOR
4	EXISTING SPRINKLER ZONE THIRD FLOOR
5	EXISTING BASEMENT FLOOR PULL STATIONS
6	EXISTING FIRST FLOOR PULL STATIONS
7	EXISTING SECOND FLOOR PULL STATIONS
8	EXISTING THIRD FLOOR PULL STATIONS
9	EXISTING BASEMENT FLOOR SMOKES AND HEATS
10	EXISTING FIRST FLOOR SMOKES AND HEATS
11	EXISTING SECOND FLOOR SMOKES AND HEATS
12	EXISTING THIRD FLOOR SMOKES AND HEATS
13	EXISTING SYSTEM TROUBLE
14	ADDITION
15	ADDITION
16	ADDITION

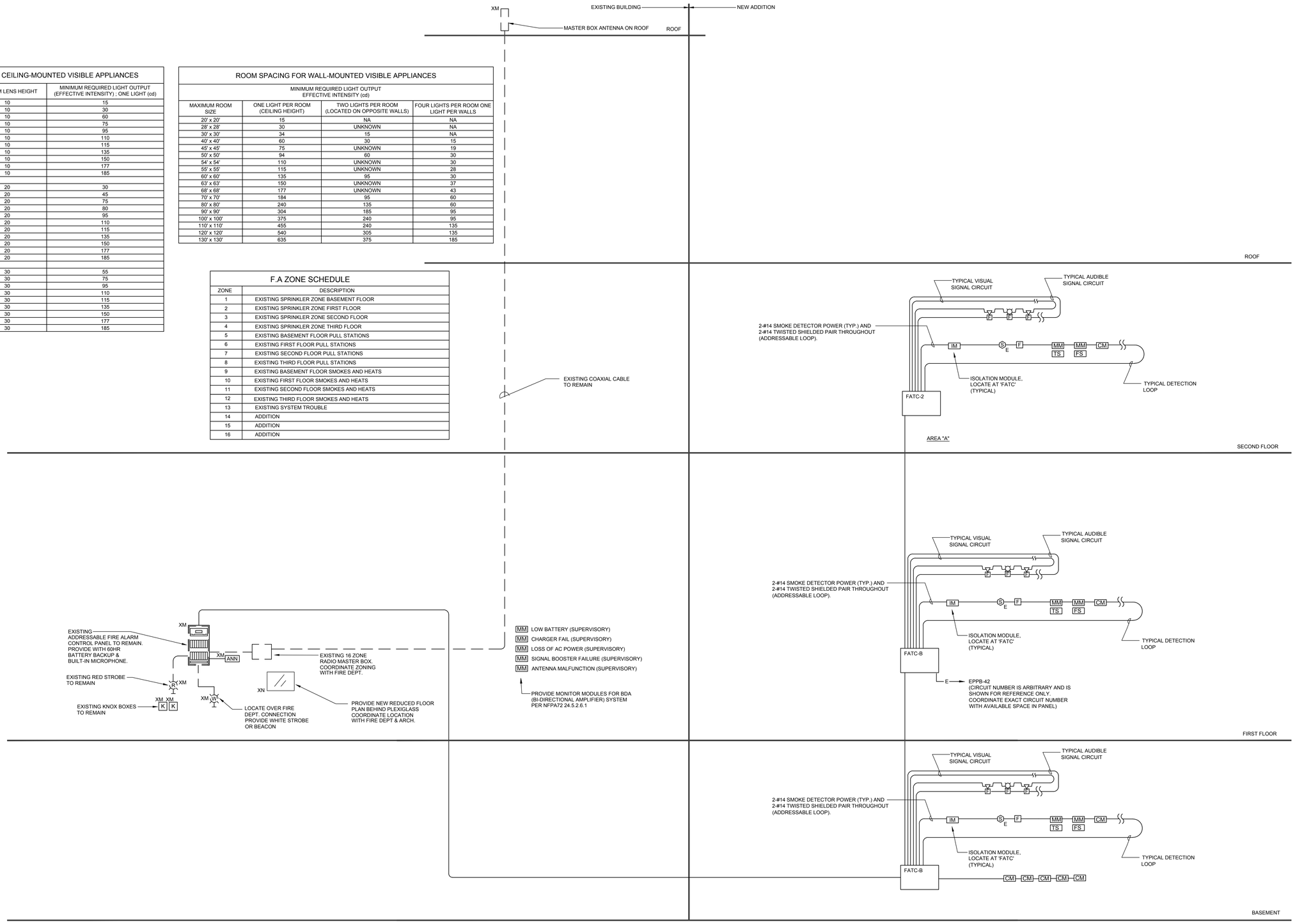

1 / E4.0 FIRE ALARM RISER

SCALE: N.T.S.

NOTES

1. E.C. SHALL REFER TO SPECIFICATIONS AND DRAWINGS FOR QUANTITY OF DEVICES, SPARE CAPACITY, PARTS, ETC.
2. E.C. SHALL REFER TO HVAC DRAWINGS FOR EXACT LOCATION OF UNITS AND FOR LOCATIONS OF DUCT MOUNTED SMOKE DETECTORS. DUCT DETECTORS FURNISHED AND WIRED BY E.C.; INSTALLED BY HVAC.
3. TYPICALLY FIRE ALARM SYSTEM SIGNAL CONDUCTORS SHALL BE #14 AWG MINIMUM, TYPE THEN SOLID. ALL FIRE ALARM WIRING SHALL BE INSTALLED IN CONDUIT. PROVIDE A SYSTEM OF RACEWAYS EQUAL TO WIREMOLD WHERE EXPOSED TO PUBLIC SPACES.
4. TYPICALLY ALL SPEAKER/STROBE UNITS SHALL BE WIRED SO THAT THE SPEAKERS CAN BE SILENCED AND THE SPEAKERS WILL REMAIN FLASHING UNTIL RESET.
5. ALL SPEAKER/STROBE WITHIN ALL AREAS . SHALL BE MULTI-TAPPED TYPE. E.C. SHALL OWN dB AJUSTING DURING FIRE DEPARTMENT TESTING.
6. ALL SPEAKER/STROBE SHALL BE MOUNTED IN ACCORDANCE WITH ADA ROOM SPACING ALLOCATION TABLES FOR VISUAL SIGNALING DEVICES.
7. PROVIDE CONTROL MODULES TO OVERRIDE MAGLOCKS FOR CARD ACCESS. REFER TO FLOOR PLAN FOR EXACT LOCATION AND QUANTITIES.
8. ALL DEVICES SHALL BE LABELED WITH CLEAR TAPE WITH BLACK INK. LABEL SHALL IDENTIFY LOOP# AND DEVICE NUMBER.
9. ALL REMOTE TEST STATIONS SHALL BE KEYED AND MOUNTED ADJACENT TO FACP OR AS DIRECTED BY LOCAL FIRE DEPT. LABEL EACH UNIT.
10. PULL STATIONS SHALL BE DOUBLE ACTION. PROVIDE TAMPER RESISTENT PLASTIC COVERS INAUDITORIUM, GYM, AND LOCKER ROOM AREAS.
11. A/V DEVICES SHALL NOT BE INSTALLED WITHIN CHALK BOARDS. COORDINATE EXACT LOCATION OF ALL A/V DEVICES W/ARCH. PRIOR TO INSTALLING.
12. ALL TAMPER AND SUPERVISORY SWITCHES SHALL BE WIRED AS LOCAL TROUBLE ALARM CONDITION UPON ACTIVATION. TROUBLE OR SUPERVISORY SHALL BE SELF RESTORING. TRANSMIT SIGNAL TO FIRE DEPT. BUT DO NOT ALARM BUILDING.
13. PRIOR TO SUBMITTING SHOP DRAWINGS, COORDINATE WITH LOCAL FIRE DEPT. FOR EXACT REQUIREMENTS. OBTAIN FIRE PREVENTION RULES AND REGULATIONS WHEN AVAILABLE AND COMPLY IN FULL.
14. COORDINATE WITH SELECTED SYSTEM MANUFACTURER FOR WIRING REQUIREMENTS.
15. ALL DETECTION &SIGNAL WIRING SHALL BE CLASS "A".
16. PROVIDE INTERCONNECTION AS REQUIRED BETWEEN NEW FACP AND EXISTING FACP. ALARM FROM EITHER PANEL SHALL ACTIVATE BOTH FACP AUDIBLE/STROBES. MAINTAIN EXISTING FIRE ALARM SYSTEMS DURING DEMOLITION, RENOVATIONS.
17. SUBMIT AS PART OF SHOP DRAWINGS COMPLETE FLOOR PLANS & RISERS WITH ALL DEVICES SHOWN AND WITH DEVICE ADDRESSES.
18. PROVIDE ISOLATION MODULE FOR EVERY 25 DEVICES. TYPICAL.

LOOP NUMBER	ADDRESSABLE LOOP SCEDULE
1	ADDITION BASEMENT
2	ADDITION FIRST FLOOR
3	ADDITION SECOND FLOOR
4	ADDITION THIRD FLOOR

COORDINATE NEW ZONES WITH FIRE DEPARTMENT

JOHN ON ROE ERT
A O IATE IN .
AF HITE T

15 PROPERZI WAY
SOMERVILLE, MA
01243 - 3228

GARCIA-GALUSKA-DESOUSA
CONSULTING ENGINEERS INC.
370 FAUNCE CORNER ROAD, DARTMOUTH, MA 02747-1217
508-998-0700 • FAX 508-998-0883 • E-MAIL info@g-g-d.com

Revisions:

CONCORD FREE PUBLIC LIBRARY EXPANSION

CONCORD, MA

Sheet Title: Fire Alarm Riser

Date: 24-Oct-19 Drawn By: MLP

Scale: As Noted Project No.: 1714

E4.0

FIRE ALARM NOTES:

1. E.C. SHALL REFER TO SPECIFICATIONS AND DRAWINGS FOR QUANTITY OF DEVICES, SPARE CAPACITY, PARTS, ETC.
2. E.C. SHALL REFER TO HVAC DRAWINGS FOR EXACT LOCATION OF UNITS AND FOR LOCATIONS OF DUCT MOUNTED SMOKE DETECTORS. DUCT DETECTORS FURNISHED AND WIRED BY E.C.; INSTALLED BY HVAC.
3. TYPICALLY FIRE ALARM SYSTEM SIGNAL CONDUCTORS SHALL BE #14 AWG, TYPE THHN SOLID.
4. TYPICALLY ALL SPEAKER/STROBE UNITS SHALL BE WIRED IN A FASHION THAT THE SPEAKER & STROBE IS SILENCED SIMULTANEOUSLY.

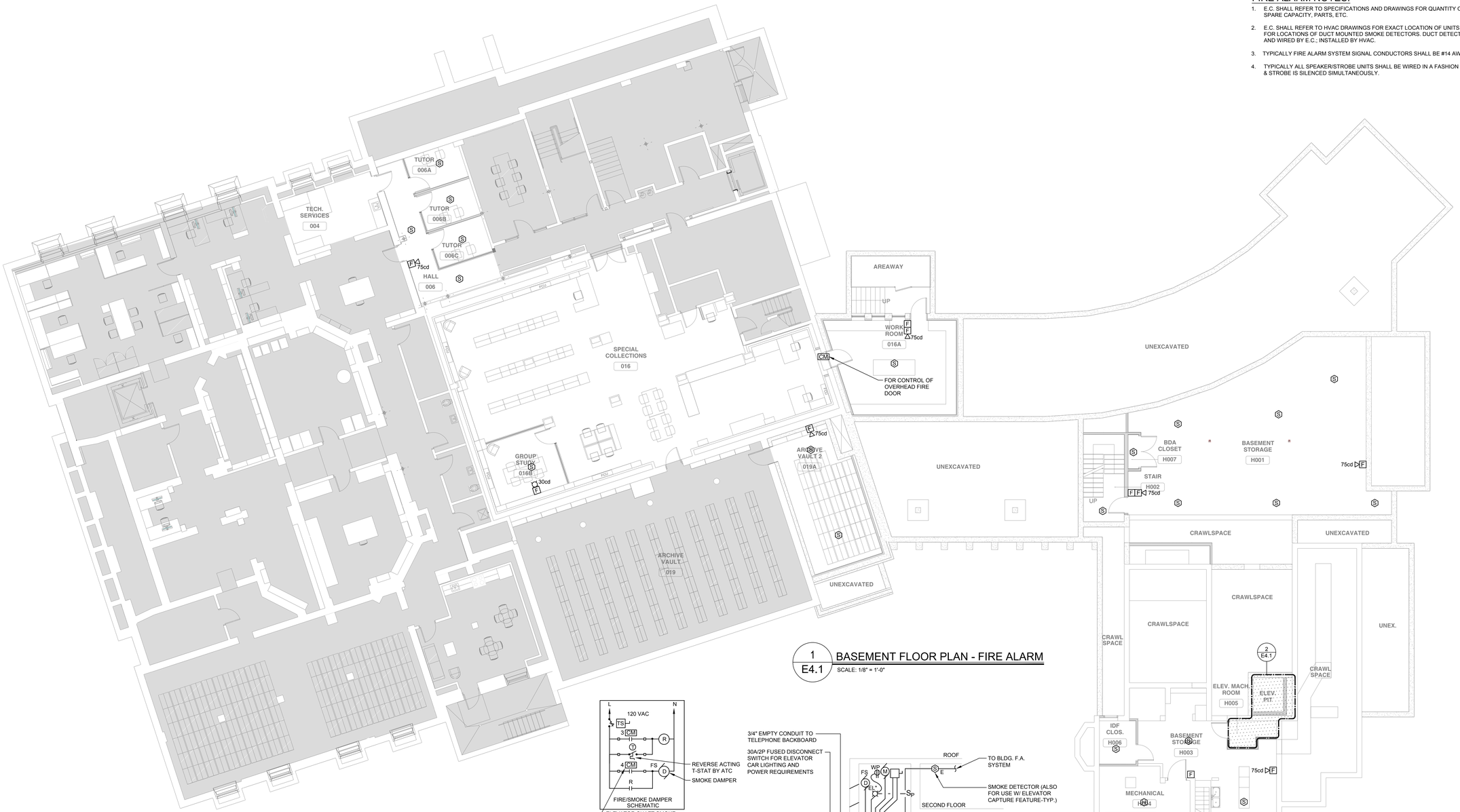

1 E4.1 BASEMENT FLOOR PLAN - FIRE ALARM

SCALE: 1/8" = 1'-0"

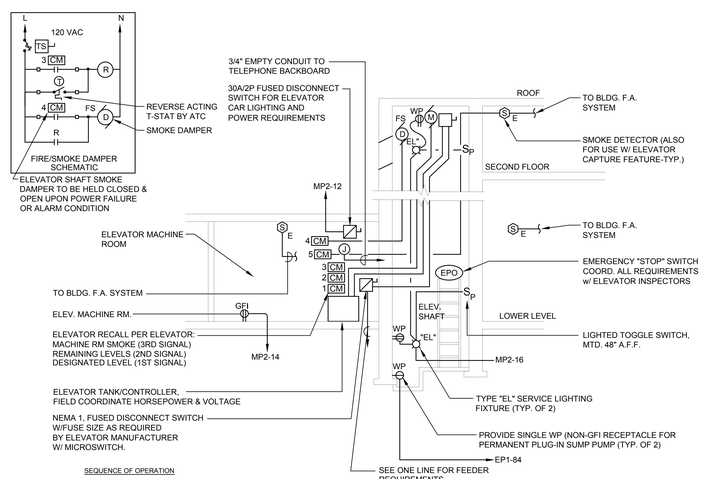

SEQUENCE OF OPERATION

1. SMOKE DETECTORS LOCATED IN EACH ELEVATOR LOBBY, MACHINE ROOM AND A FIXED TEMPERATURE HEAT DETECTOR AT TOP OF HOISTWAY SHALL INITIATE ELEVATOR RECALL IN ADDITION TO SENDING SYSTEM INTO "AUTO" ALARM MODE FOR FIRE FIGHTERS SERVICE.
2. FIVE (5) CONTROL MODULES WILL BE LOCATED IN THE ELEVATOR MACHINE ROOM.
3. THE SMOKE DETECTOR LOCATED ON THE DESIGNATED LEVEL WILL ACTUATE THE FIRST CONTROL MODULE OF EACH ELEVATOR AND INITIATE THE ALTERNATE LEVEL RECALL.
4. THE SMOKE DETECTORS ON THE REMAINING ELEVATOR LEVELS WILL ACTUATE THE SECOND CONTROL MODULE FOR DESIGNATED LEVEL RECALL FOR EACH ELEVATOR.
5. THE THIRD CONTROL MODULE WILL BE ACTUATED BY A FIRE ALARM INITIATING DEVICE IN THE MACHINE ROOM, CONTROL SPACE, CONTROL ROOM AND/OR HOISTWAY AND WILL ILLUMINATE THE ASSOCIATED FIREFIGHTERS HAT.
6. WHERE THE ELEVATOR MACHINE ROOM IS LOCATED AT THE DESIGNATED LEVEL, THAT MACHINE ROOM SMOKE DETECTOR WILL ALSO ACTUATE THE FIRST CONTROL MODULE TO RECALL ELEVATOR TO THE ALTERNATE LEVEL.
7. THE FOURTH CONTROL MODULE WILL BE ACTUATED BY A FIRE ALARM INITIATING DEVICE IN THE MACHINE ROOM, CONTROL SPACE, CONTROL ROOM AND/OR HOISTWAY AND WILL ENERGIZE THE MACHINE ROOM EXHAUST FAN.
8. THE FIFTH CONTROL MODULE WILL BE ACTUATED BY A FIRE ALARM INITIATING DEVICE IN THE MACHINE ROOM, CONTROL SPACE, CONTROL ROOM AND/OR HOISTWAY AND WILL DE-ENERGIZE THE FIRE/SMOKE DAMPER CAUSING IT TO OPEN.
9. THE HEAT DETECTOR AT THE TOP OF THE HOISTWAY WILL ALSO ACTUATE THE THIRD CONTROL MODULE IF NEEDED BY ELEVATOR MANUFACTURER OR REQUIRED BY AUTHORITY HAVING JURISDICTION.

2 E4.1 ELEVATOR SHAFT AND MACHINE ROOM (NO SPRINKLER) DETAIL

N.T.S.

JOHN ON ROBERT A O IATE IN . AR HITE T

15 PROPERZI WAY
SOMERVILLE, MA
01243 - 3228

GARCIA-GALUSKA-DESOUSA CONSULTING ENGINEERS INC.
370 FAUNCE CORNER ROAD, DARTMOUTH, MA 02747-1317
508-998-5700 • FAX 508-998-0883 • E-MAIL info@g-g-d.com

Revisions:

CONCORD FREE PUBLIC LIBRARY EXPANSION

CONCORD, MA

Sheet Title:

Basement Floor Plan- Fire Alarm

Date: 24-Oct-19 Drawn By: RLP

Scale: 1/8"=1'-0" Project No.: 1714

E4.1

FIRE ALARM NOTES:

1. E.C. SHALL REFER TO SPECIFICATIONS AND DRAWINGS FOR QUANTITY OF DEVICES, SPARE CAPACITY, PARTS, ETC.
2. E.C. SHALL REFER TO HVAC DRAWINGS FOR EXACT LOCATION OF UNITS AND FOR LOCATIONS OF DUCT MOUNTED SMOKE DETECTORS. DUCT DETECTORS FURNISHED AND WIRED BY E.C.; INSTALLED BY HVAC.
3. TYPICALLY FIRE ALARM SYSTEM SIGNAL CONDUCTORS SHALL BE #14 AWG, TYPE THHN SOLID.
4. TYPICALLY ALL SPEAKER/STROBE UNITS SHALL BE WIRED IN A FASHION THAT THE SPEAKER & STROBE IS SILENCED SIMULTANEOUSLY.

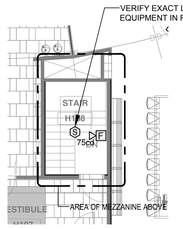

2 / E4.2 PART PLAN -MECHANICAL MEZZANINE

SCALE: 1/8" = 1'-0"

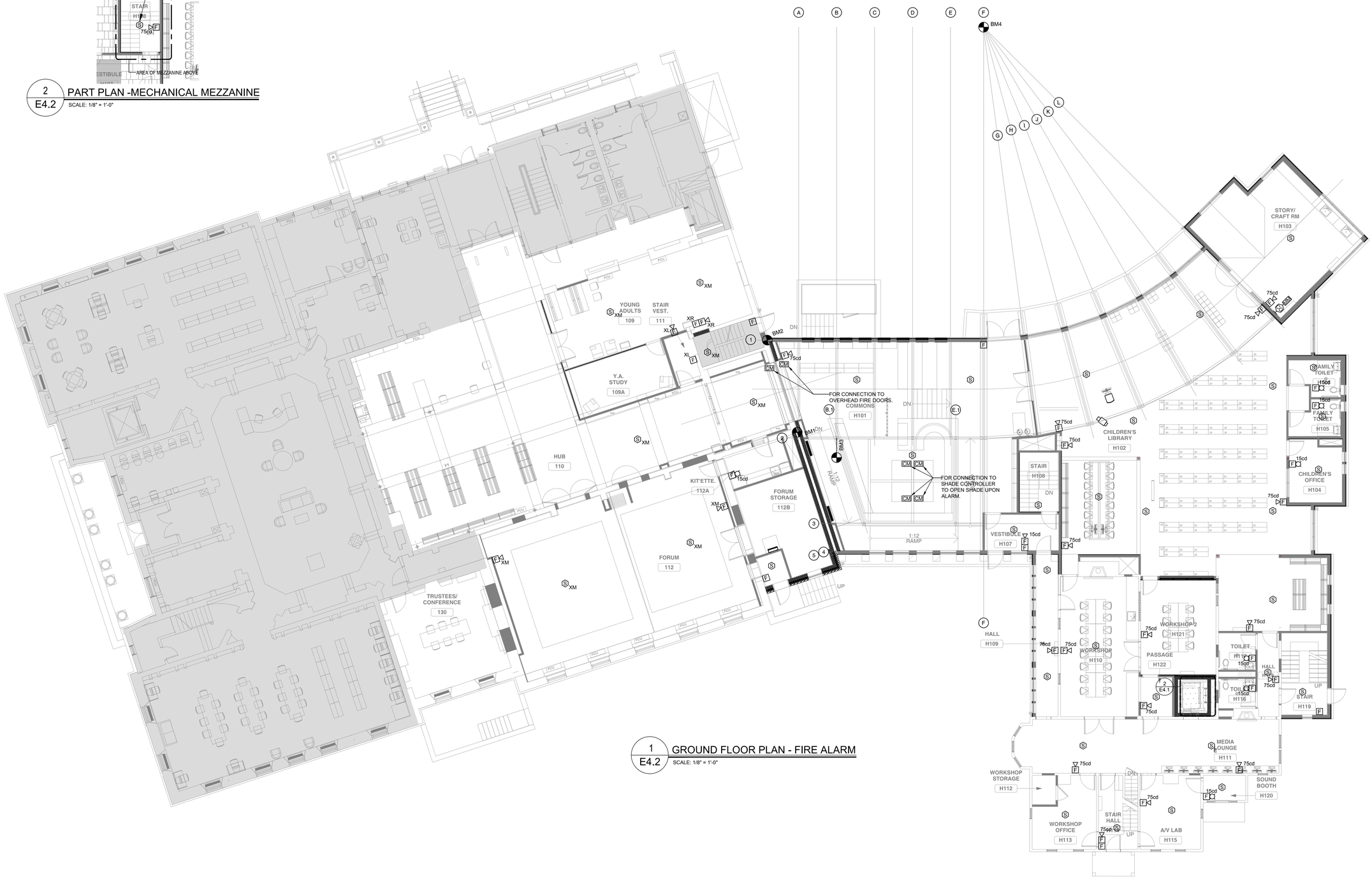

1 / E4.2 GROUND FLOOR PLAN - FIRE ALARM

SCALE: 1/8" = 1'-0"

JOHNSON ROBERT ASSOCIATES INC. ARCHITECT

15 PROPERZI WAY
SOMERVILLE, MA
01243 - 3228

GARCIA-GALUSKA-DESOUSA
CONSULTING ENGINEERS INC.
370 FAUNCE CORNER ROAD, DARTMOUTH, MA 02747-1317
508-998-5700 • FAX 508-998-0883 • E-MAIL info@g-g-d.com

Revisions:

CONCORD FREE PUBLIC LIBRARY EXPANSION

CONCORD, MA

Sheet Title:

Ground Floor Plan- Fire Alarm

Date: 24-Oct-19 Drawn By: MLP

Scale: 1/8"=1'-0" Project No.: 1714

E4.2

FIRE ALARM NOTES:

1. E.C. SHALL REFER TO SPECIFICATIONS AND DRAWINGS FOR QUANTITY OF DEVICES, SPARE CAPACITY, PARTS, ETC.
2. E.C. SHALL REFER TO HVAC DRAWINGS FOR EXACT LOCATION OF UNITS AND FOR LOCATIONS OF DUCT MOUNTED SMOKE DETECTORS. DUCT DETECTORS FURNISHED AND WIRED BY E.C.; INSTALLED BY HVAC.
3. TYPICALLY FIRE ALARM SYSTEM SIGNAL CONDUCTORS SHALL BE #14 AWG, TYPE THHN SOLID.
4. TYPICALLY ALL SPEAKER/STROBE UNITS SHALL BE WIRED IN A FASHION THAT THE SPEAKER & STROBE IS SILENCED SIMULTANEOUSLY.

1
E4.3
SECOND FLOOR PLAN - FIRE ALARM
SCALE: 1/8" = 1'-0"

JOHNSON ROBERT ASSOCIATES, INC.
ARCHITECTS

15 PROPERZI WAY
SOMERVILLE, MA
01243 - 3228

GARCIA-GALUSKA-DESOUSA
CONSULTING ENGINEERS INC.
370 FAUNCE CORNER ROAD, DARTMOUTH, MA 02747-1217
508-998-5700 • FAX 508-998-0883 • E-MAIL info@g-g-d.com

Revisions:

CONCORD FREE PUBLIC LIBRARY EXPANSION

CONCORD, MA

Sheet Title:
Second Floor Plan - Fire Alarm

Date: 24-Oct-19 Drawn By: MLP

Scale: 1/8"=1'-0" Project No.: 1714

E4.3

SYMBOL LIST

TEL/DATA OUTLETS

W	WALL MOUNTED TELEPHONE OUTLET @ 48" A.F.F. REFER TO TEL/DATA RISER FOR WIRING REQUIREMENTS. COVER PLATES SHALL BE STAINLESS STEEL.
#	WALL MOUNTED DATA OUTLET @ 18" A.F.F. REFER TO TEL/DATA RISER FOR WIRING REQUIREMENTS. NUMERAL INDICATES NUMBER OF RJ45 JACKS ON SAME FACEPLATE. COVER PLATES SHALL BE STAINLESS STEEL.
#V/#D	COMBINATION TEL/DATA OUTLET @ 18" A.F.F. #V INDICATES NUMBER OF RJ45 VOICE JACKS, #D INDICATES NUMBER OF RJ45 DATA JACKS ON SAME FACEPLATE. (1) VOICE & (1) DATA IF #V/#D IS NOT SHOWN (TYPICAL). REFER TO TEL/DATA RISER FOR WIRING REQUIREMENTS. COVER PLATES SHALL BE STAINLESS STEEL.
AN	WIRELESS ACCESS NODE - DATA REFER TO TEL/DATA RISER FOR WIRING REQUIREMENTS. COVER PLATES SHALL BE STAINLESS STEEL. MOUNTED ABOVE CEILING U.N.O.
TVC	CABLE/DATA OUTLET REFER TO TEL/DATA RISER FOR WIRING REQUIREMENTS COVER PLATES SHALL BE STAINLESS STEEL. MOUNTED @ 84" A.F.F. U.N.O.
TVE	VIDEO PROJECTOR OUTLET REFER TO TEL/DATA RISER FOR WIRING REQUIREMENTS. COVER PLATES SHALL BE STAINLESS STEEL. CEILING MOUNTED U.N.O.
T	TEACHER'S STATION REFER TO TEL/DATA RISER FOR WIRING REQUIREMENTS COVER PLATES SHALL BE STAINLESS STEEL. MOUNTED @ 18" A.F.F. U.N.O.
IDF	INTERMEDIATE DISTRIBUTION FRAME
MDF	MAIN DISTRIBUTION FRAME
S	FLUSH MOUNTED CEILING SPEAKER
SRP	SMART RESCUE PHONE
ARA	AREA RESCUE ASSISTANCE BUTTON
IDF	INTERMEDIATE DISTRIBUTION FRAME
MDF	MAIN DISTRIBUTION FRAME

RECEPTACLES

	FLUSH FLOOR OUTLET BOXES WITH BOTH 120 VOLT & TELE/DATA COMPARTMENTS FLOOR BOX BY OTHERS. BRASS COVER PLATE BY I.T. CONTRACTOR.
	FLUSH FLOOR OUTLET BOXES WITH BOTH 120 VOLT & DATA COMPARTMENTS. FLOOR BOX BY OTHERS. BRASS COVER PLATE BY I.T. CONTRACTOR.
	WIREMOLD RACEWAY PROVIDED UNDER SECTION 260000

EXISTING EQUIPMENT

	DOTTED DENOTES EXISTING EQUIPMENT.
X	EXISTING EQUIPMENT TO BE REMOVED AND CIRCUIT PULLED BACK TO NEXT ACTIVE OUTLET/BACK TO PANEL.
XM	EXISTING EQUIPMENT TO REMAIN.
XR	EXISTING EQUIPMENT TO BE REMOVED AND RELOCATED.
XL	NEW LOCATION OF RELOCATED EXISTING EQUIPMENT.
XN	EXISTING EQUIPMENT TO BE REMOVED AND NEW EQUIPMENT INSTALLED IN SAME LOCATION.
RR	REMOVE AND REINSTALL IN SAME LOCATION.

ABBREVIATIONS

A.F.F.	ABOVE FINISHED FLOOR	P.C.	PLUMBING CONTRACTOR
A.F.G.	ABOVE FINISHED GRADE	M.H.	MOUNTING HEIGHT
APC	ANGLE POLISHED CONNECTOR	W.P.	WEATHER PROOF
ARCH.	ARCHITECT	U.N.O.	UNLESS NOTED OTHERWISE
A.T.C.	AUTO-TEMP CONTROL CONTRACTOR	WG	WIRE GUARD
℄	CENTERLINE	CATV	CABLE TELEVISION
CLG.	CEILING	DH	DOOR HOLDER
E.C.	ELECTRICAL CONTRACTOR	F.A.C.P.	FIRE ALARM CONTROL PANEL
F&I	FURNISHED AND INSTALLED	PAC	PUBLIC ACCESS COMPUTER
F.P.C.	FIRE PROTECTION CONTRACTOR	MAC	MACINTOSH COMPUTER
G.C.	GENERAL CONTRACTOR	I.T.	INFORMATION TECHNOLOGY
H.V.A.C.	HEATING, VENTILATION, AND AIR CONDITIONING CONTRACTOR	IESS	INTEGRATED ELECTRONIC SECURITY SYSTEM INTEGRATOR

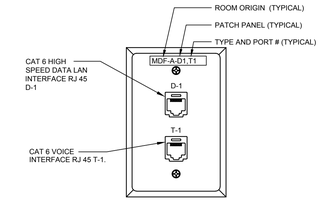

1 / T0.1 TYPICAL WALL MTD VOICE/DATA OUTLET (▼) DETAIL
SCALE: NTS

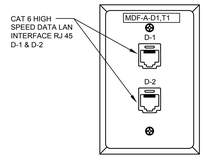

2 / T0.1 TYPICAL DATA OUTLET (2▽) DETAIL
SCALE: NTS

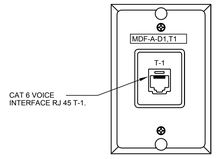

3 / T0.1 TYPICAL WALL PHONE OUTLET (W▼) DETAIL
SCALE: NTS

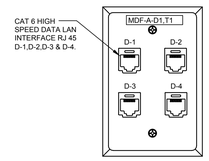

4 / T0.1 TYPICAL DATA OUTLET (4▽) DETAIL
SCALE: NTS

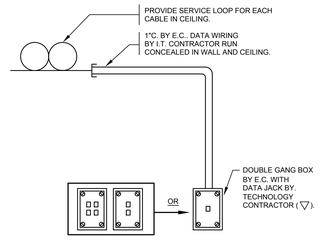

5 / T0.1 DATA OUTLET DETAIL
SCALE: NTS

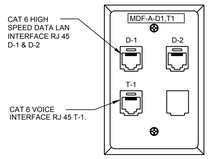

6 / T0.1 TYPICAL DATA OUTLET (1V/2D▼) DETAIL
SCALE: NTS

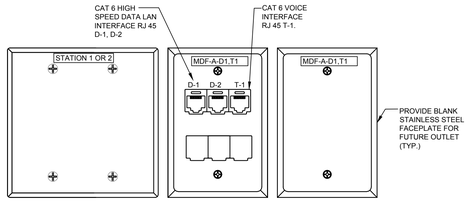

7 / T0.1 TYPICAL TEACHER STATION OUTLET(T▼) DETAIL
SCALE: NTS

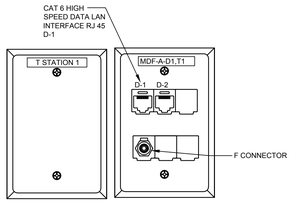

8 / T0.1 LCD PROJECTOR JACK OUTLET(TVE) DETAIL
SCALE: NTS

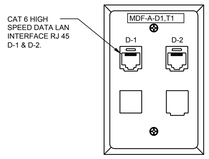

9 / T0.1 TYPICAL OUTLET (AN▽) DETAIL
SCALE: NTS

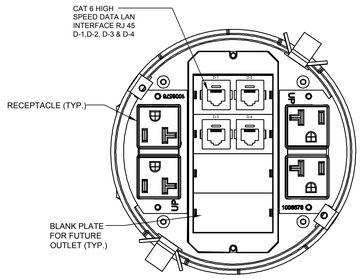

10 / T0.1 TYPICAL 6" POKE THRU DATA & VOICE OUTLET (2▽, 4▽, 1V/2D▼) DETAIL
SCALE: NTS

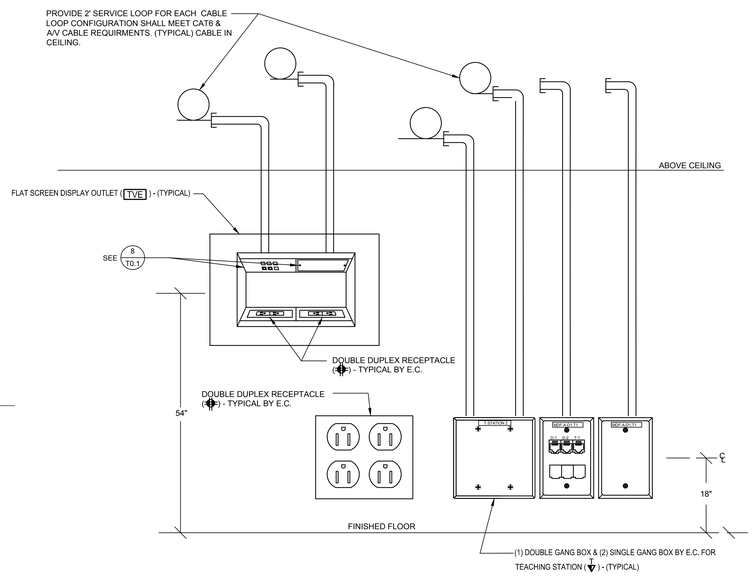

11 / T0.1 TYPICAL TEACHER STATION JACK OUTLET (T▼TVE) DETAIL
SCALE: NTS

JOHN ON ROE ERT A O IATE IN . AF HITE T

15 PROPERZI WAY
SOMERVILLE, MA
01243 - 3228

GARCIA-GALUSKA-DESOUSA
CONSULTING ENGINEERS INC.
370 FAUNCE CORNER ROAD, DARTMOUTH, MA 02747-1217
508-998-5700 • FAX 508-998-0883 • E-MAIL info@g-g-d.com

Revisions:

CONCORD FREE PUBLIC LIBRARY EXPANSION

CONCORD, MA

Sheet Title:
TECHNOLOGY SYMBOLS LIST

Date: 24-Oct-19 Drawn By: JR
Scale: N.T.S. Project No.: 1714

T0.1

GENERAL NOTES

1. TEL/DATA OUTLETS ARE SHOWN FOR REFERENCE PURPOSES. EXACT LOCATIONS WILL BE AS SHOWN ON ELECTRICAL DRAWINGS. COORDINATE INSTALLATION OF ALL CABLING WITH ELECTRICAL SUBCONTRACTOR.
2. KEEP DATA CABLING AT LEAST 12" AWAY FROM POWER WIRING.
4. ALL FLOOR BOX BRASS COVERS SHALL BE PROVIDE UNDER SECTION 26740. COORDINATE WITH ELECTRICAL SUBCONTRACTOR FOR FLOOR BOX VENDOR.
4. ALL CONDUITS AND JUNCTION BOXES TO BE PROVIDED UNDER DIVISION 26000. SHOWN FOR REFERENCE ONLY.

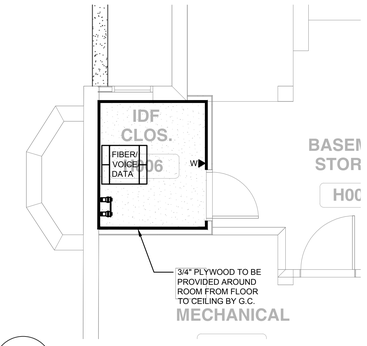

2 / T1.1 IDF CLOS. H006 PART PLAN - TECHNOLOGY

SCALE: 1/4" = 1'-0"

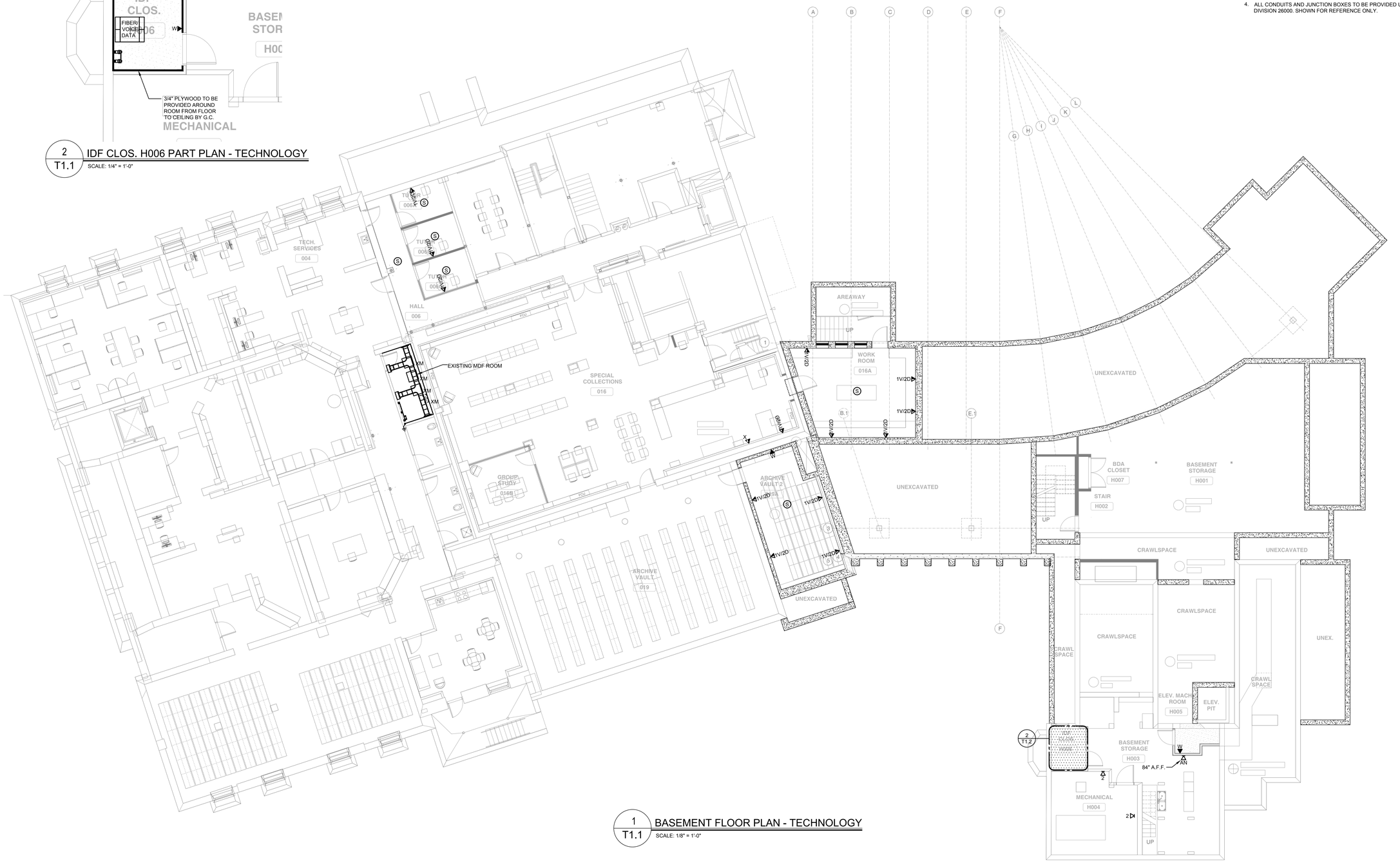

1 / T1.1 BASEMENT FLOOR PLAN - TECHNOLOGY

SCALE: 1/8" = 1'-0"

JOHN ON ROBERT A O IATE IN .
AR HITE T

15 PROPERZI WAY
SOMERVILLE, MA
01243 - 3228

GARCIA-GALUSKA-DESOUSA
CONSULTING ENGINEERS INC.
370 FAUNCE CORNER ROAD, DARTMOUTH, MA 02747-1217
508-998-5700 • FAX 508-998-0883 • E-MAIL info@g-g-d.com

Revisions:

CONCORD FREE PUBLIC LIBRARY EXPANSION

CONCORD, MA

Sheet Title:
Basement Floor Plan- Technology

Date: 24-Oct-19 Drawn By: MLP

Scale: 1/8"=1'-0" Project No.: 1714

T1.1

GENERAL NOTES

1. TEL/DATA OUTLETS ARE SHOWN FOR REFERENCE PURPOSES. EXACT LOCATIONS WILL BE AS SHOWN ON ELECTRICAL DRAWINGS. COORDINATE INSTALLATION OF ALL CABLING WITH ELECTRICAL SUBCONTRACTOR.
2. KEEP DATA CABLING AT LEAST 12" AWAY FROM POWER WIRING.
4. ALL FLOOR BOX BRASS COVERS SHALL BE PROVIDE UNDER SECTION 26740. COORDINATE WITH ELECTRICAL SUBCONTRACTOR FOR FLOOR BOX VENDOR.
4. ALL CONDUITS AND JUNCTION BOXES TO BE PROVIDED UNDER DIVISION 26000. SHOWN FOR REFERENCE ONLY.

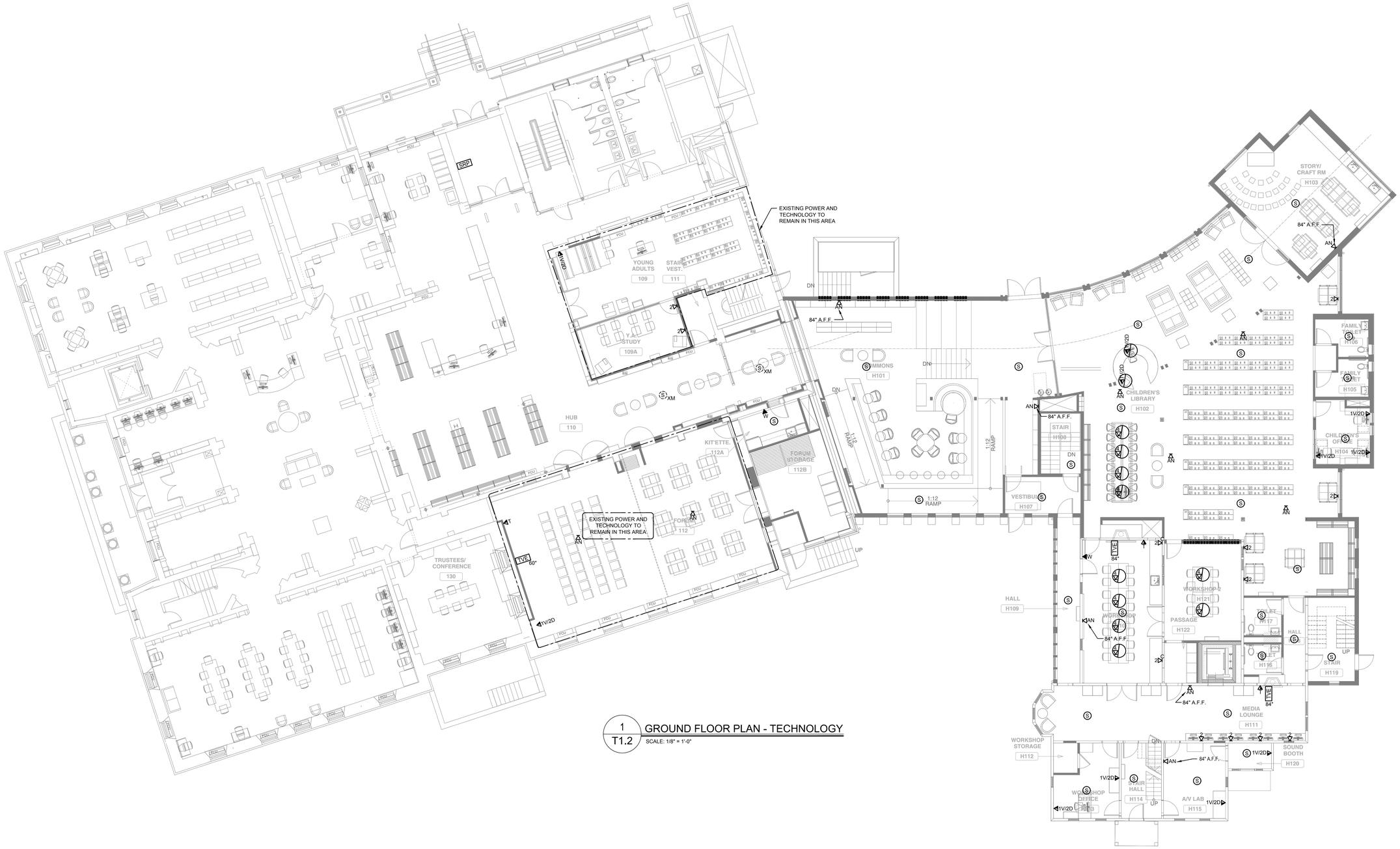

1 / T1.2 GROUND FLOOR PLAN - TECHNOLOGY

SCALE: 1/8" = 1'-0"

JOHN ON ROBERT A O IATE IN .
AR HITE T

15 PROPERZI WAY
SOMERVILLE, MA
01243 - 3228

GARCIA-GALUSKA-DESOUSA
CONSULTING ENGINEERS INC.
370 FAUNCE CORNER ROAD, DARTMOUTH, MA 02747-1217
508-998-5700 • FAX 508-998-0883 • E-MAIL info@g-g-d.com

Revisions:

CONCORD FREE PUBLIC LIBRARY EXPANSION

CONCORD, MA

Sheet Title:

Ground Floor Plan- Technology

Date: 24-Oct-19 Drawn By: MLP

Scale: 1/8"=1'-0" Project No.: 1714

T1.2

GENERAL NOTES

1. TEL/DATA OUTLETS ARE SHOWN FOR REFERENCE PURPOSES. EXACT LOCATIONS WILL BE AS SHOWN ON ELECTRICAL DRAWINGS. COORDINATE INSTALLATION OF ALL CABLING WITH ELECTRICAL SUBCONTRACTOR.
2. KEEP DATA CABLING AT LEAST 12" AWAY FROM POWER WIRING.
4. ALL FLOOR BOX BRASS COVERS SHALL BE PROVIDE UNDER SECTION 26740. COORDINATE WITH ELECTRICAL SUBCONTRACTOR FOR FLOOR BOX VENDOR.
4. ALL CONDUITS AND JUNCTION BOXES TO BE PROVIDED UNDER DIVISION 26000. SHOWN FOR REFERENCE ONLY.

1 / T1.3 SECOND FLOOR PLAN - TECHNOLOGY

SCALE: 1/8" = 1'-0"

JOHNSON ROBERT ASSOCIATES, INC.
ARCHITECTS

15 PROPERZI WAY
SOMERVILLE, MA
01243 - 3228

GARCIA-GALUSKA-DESOUSA
CONSULTING ENGINEERS INC.
370 FAUNCE CORNER ROAD, DARTMOUTH, MA 02747-1217
508-998-5700 • FAX: 508-998-0883 • E-MAIL: info@g-g-d.com

Revisions:

CONCORD FREE PUBLIC LIBRARY EXPANSION

CONCORD, MA

Sheet Title:

Second Floor Plan - Technology

Date: 24-Oct-19 Drawn By: MLP

Scale: 1/8"=1'-0" Project No.: 1714

T1.3

QUANTITY OF DEVICES

IDF CLOSET H006

	DATA (CAT 6)	VOICE (CAT 6)	CATV
2 = 13	26	-	-
4 = 11	44	-	-
AN = 14	28	-	-
T = 3	6	3	-
1V/2D = 23	46	23	-
W = 3	-	3	-
TVE = 3	6	-	3
TOTAL	156	29	3

QUANTITY OF DEVICES

SERVER 020 (EXISTING MDF)

	DATA (CAT 6)	VOICE (CAT 6)	CATV
2 = 2	4	-	-
4 = -	-	-	-
AN = 2	4	-	-
T = 1	2	1	-
1V/2D = 12	24	12	-
W = 3	-	3	-
TVE = 1	2	-	1
TOTAL	36	16	1

QUANTITY OF DEVICES

IDF ROOM 305 (EXISTING IDF)

	DATA (CAT 6)	VOICE (CAT 6)	CATV
2 = 2	4	-	-
4 = -	-	-	-
AN = -	-	-	-
T = -	-	-	-
1V/2D = -	-	-	-
W = -	-	-	-
TVE = -	-	-	-
TOTAL	4	-	-

INTERMEDIATE DISTRIBUTION FRAME IDF

LOCATION: IDF CLOSET H006

CAT 6 (RJ45) VOICE PORT				CAT 6 (RJ45) DATA PORTS		
USED	SPARE	PATCH PANEL SIZE		USED	SPARE	PATCH PANEL SIZE
29	19	DISTRIBUTION	(1) 48 PORT	156	36	(4) 48 PORT
		WORKSTATION	(1) 48 PORT			

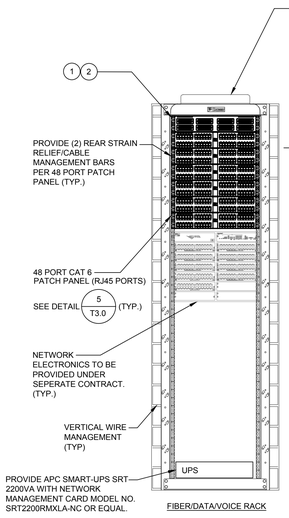

1 / T2.0 IDF (IDF CLOSET H006) DETAIL

NOT TO SCALE

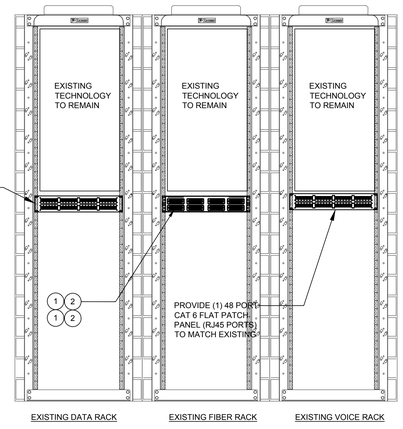

2 / T2.0 EXISTING MDF SERVER 020 DETAIL

NOT TO SCALE

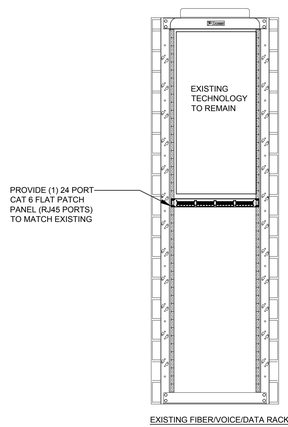

3 / T2.0 EXISTING IDF IDF ROOM 305 DETAIL

NOT TO SCALE

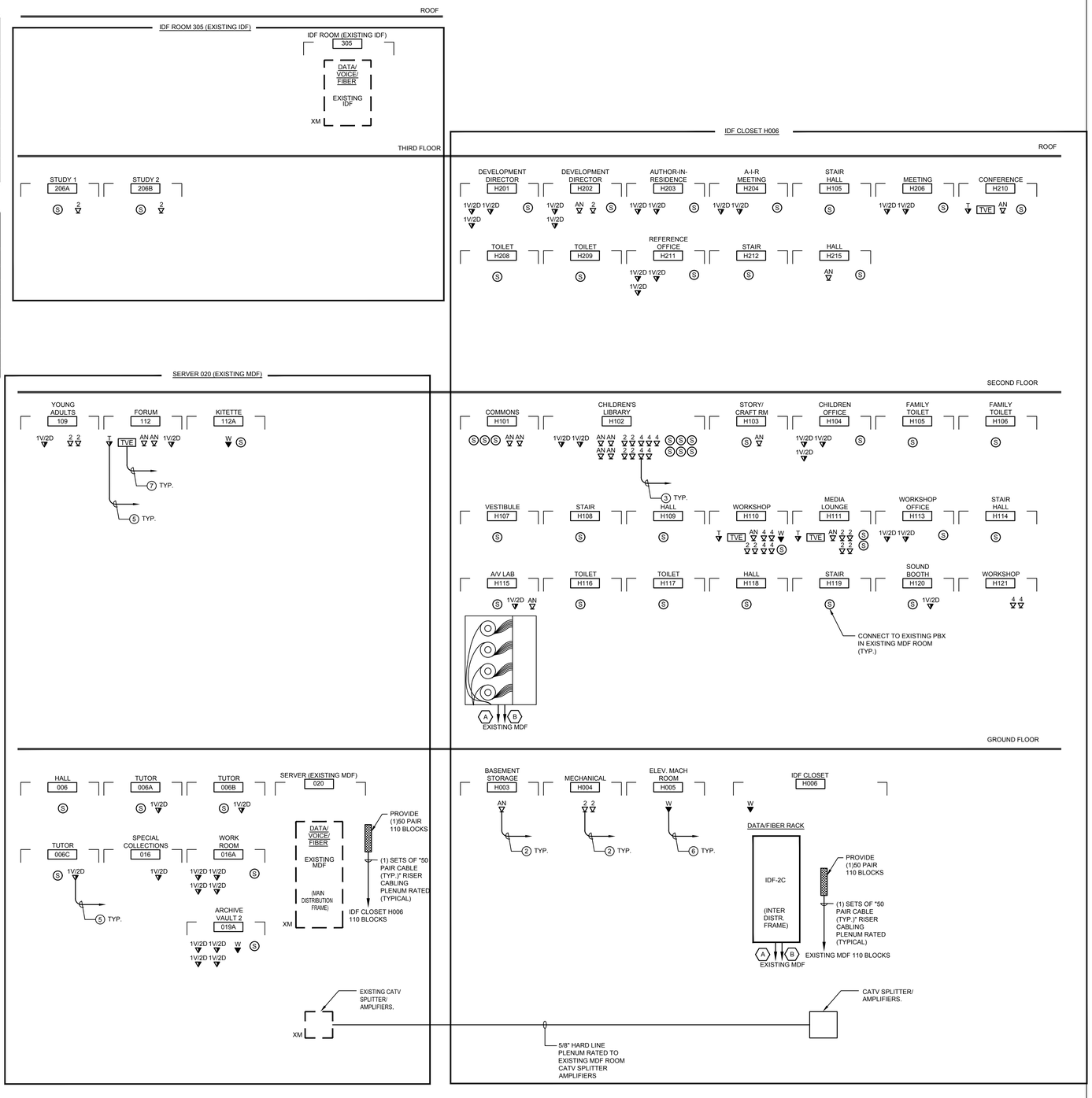

CABLE/FIBER SCHEDULE

1. FIBER OPTIC MULTIMODE LIU (LIGHTGUIDE INTERFACE UNIT) PATCH PANEL (12 PORT - SC CONNECTORS) - PREMISES DISTRIBUTION
2. FIBER OPTIC SINGLEMODE LIU (LIGHTGUIDE INTERFACE UNIT) PATCH PANEL (6 PORT - ST CONNECTORS) - PREMISES DISTRIBUTION
3. FIBER OPTIC SINGLEMODE LIU (LIGHTGUIDE INTERFACE UNIT) PATCH PANEL (12 PORT - ST CONNECTORS) - PREMISES DISTRIBUTION

NOTES:

1. - (1) CAT 6 UTP CABLES PLENUM RATED TO MDF IN BLOCKED AREA (TYPICAL)
2. - (2) CAT 6 UTP CABLES PLENUM RATED TO MDF IN BLOCKED AREA (TYPICAL)
3. - (4) CAT 6 UTP CABLES PLENUM RATED TO MDF IN BLOCKED AREA (TYPICAL)
4. - (1) CAT 6 UTP CABLE PLENUM RATED TO MDF IN BLOCKED AREA & (1) CAT 6 UTP CABLE PLENUM RATED TO MDF VOICE RACK IN BLOCKED AREA (TYPICAL)
5. - (2) CAT 6 UTP CABLES PLENUM RATED TO MDF IN BLOCKED AREA & (1) CAT 6 UTP CABLES PLENUM RATED TO MDF VOICE RACK IN BLOCKED AREA
6. - (1) CAT 6 UTP CABLES PLENUM RATED TO MDF VOICE RACK IN BLOCKED AREA (TYPICAL)
7. - (2) CAT 6 UTP CABLES PLENUM RATED TO MDF DATA RACK IN BLOCKD AREA
   - (1) RG-6 QUAD SHIELD PLENUM RATED TO MDF/IDF CATV SPLITTER IN BLOCKED AREA

NOTE:

1. THIS CONTRACTOR SHALL PROVIDE FOR A COMPLETE INSTALLATION. FURNISH ALL EQUIP. LABOR, WIRING AND OUTLETS REQUIRED FOR A COMPLETELY OPERATIONAL SYSTEM.
2. ALL WIRING SHALL BE IN ACCORDANCE WITH EQUIPMENT SUPPLIER. COORDINATE ALL WIRING REQUIREMENTS PRIOR TO ROUGHING-IN.
3. PROVIDE APPROPRIATE QUANTITIES OF DATA PATCH PANELS TO ACCOMODATE ALL RESPECTIVE DATA CIRCUITS.
4. PROVIDE CAT 6 PATCH CORDS TO MATCH TOTAL QUANTITY OF PATCH PANEL PORTS. AT BOTH MDF/IDF AND WORK STATION.

JOHN ON ROE RT A O IATE IN . AF HITE T

15 PROPERZI WAY
SOMERVILLE, MA
01243 - 3228

GARCIA-GALUSKA-DESOUSA
CONSULTING ENGINEERS INC.
370 FAUNCE CORNER ROAD, DARTMOUTH, MA 02747-1217
508-998-5700 • FAX 508-998-0883 • E-MAIL info@g-g-d.com

Revisions:

CONCORD FREE PUBLIC LIBRARY EXPANSION

CONCORD, MA

Sheet Title:

TECHNOLOGY RISER DIAGRAM

Date: 24-Oct-19 Drawn By: JR

Scale: N.T.S. Project No.: 1714

T2.0

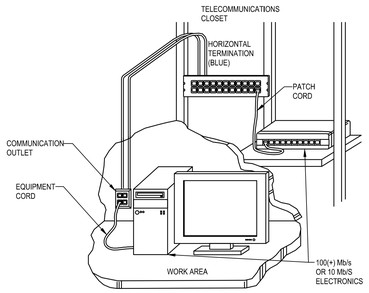

1 / T3.0 TYPICAL INTERCONNECTION ARCHITECTURE

NOT TO SCALE

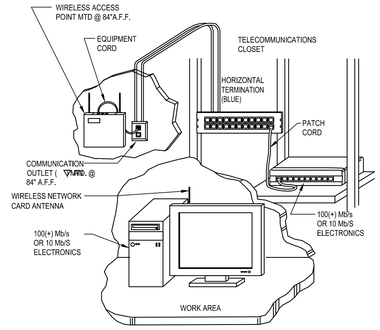

2 / T3.0 TYPICAL WIRELESS INTERCONNECTION ARCHITECTURE

NOT TO SCALE

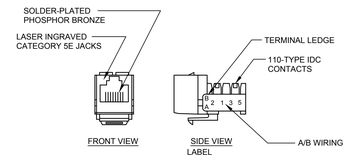

3 / T3.0 RJ45 CONNECTION DETAILS

NOT TO SCALE

NOTE

PANELS SHALL BE UL LITSED; MEET NATIONAL ELECTRICAL CODE REQUIREMENTS AND SPECIFICATIONS FOR UL 1863; AND FULLY COMPLY WITH FCC PART 68 AND TIA-568-A CATEGORY 5E.

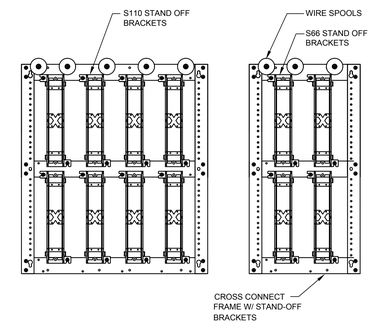

4 / T3.0 TYPICAL CROSS CONNECT

NOT TO SCALE

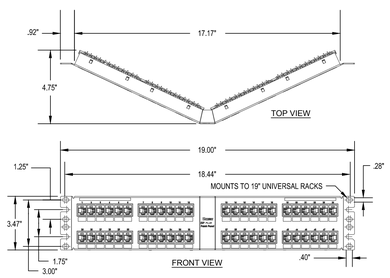

5 / T3.0 48 PORT CAT 6 PATCH PANEL

NOT TO SCALE

NOTE

PANELS SHALL BE UL LISTED; MEET NATIONAL ELECTRICAL CODE REQUIREMENTS AND SPECIFICATIONS FOR UL 1863; AND FULLY COMPLY WITH FCC PART 68 AND TIA-568-A CATEGORY 6.

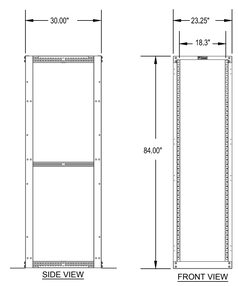

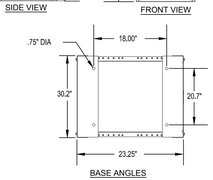

NOTES:

1. CAN BE USED WITH ANY EIA STANDARD COMPONENT IN ADDITION TO ALL PANDUIT HORIZONTAL CABLE MANAGEMENT AND PATCH PANEL PRODUCTS.
2. 45 AVAILABLE RACK SPACES.
3. RU SPACING NUMBERS ARE CLEARLY PRINTER ON MOUNTING RAILS.
4. EASY ASSEMBLY. ONE WRENCH NEEDED TO INSTALL BOLTS INTO WELDNUTS IN ALL 8 CORNERS.
5. FULLY BONDED STRUCTURE WHEN ASSEMBLED PER INSTRUCTIONS.
6. LOAD RATING - 2000 LBS.

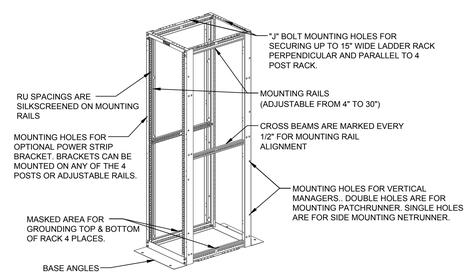

6 / T3.0 4 POST RACK

NOT TO SCALE

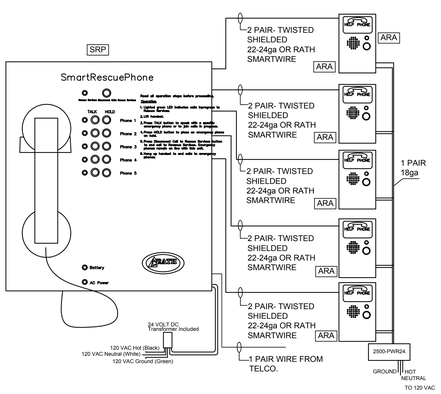

7 / T3.0 SMARTRESCUE BASE STATION WIRING DIAGRAM

SCALE: N.T.S.

SRP SMART RESCUE PHONE

ARA AREA RESCUE ASSISTANCE BUTTON

JOHNSON ROBERT ASSOCIATES, ARCHITECTS

15 PROPERZI WAY
SOMERVILLE, MA
01243 - 3228

GARCIA-GALUSKA-DESOUSA
CONSULTING ENGINEERS INC.
370 FAUNCE CORNER ROAD, DARTMOUTH, MA 02747-1317
508-998-5700 • FAX 508-998-0883 • E-MAIL info@g-g-d.com

Revisions:

CONCORD FREE PUBLIC LIBRARY EXPANSION

CONCORD, MA

Sheet Title:

TECHNOLOGY DETAILS

Date: 24-Oct-19 Drawn By: JR

Scale: N.T.S. Project No.: 1714

T3.0