PRD ZONING COMPLIANCE TABLE

10.2.1 MINIMUM TRACT SIZE: (9.18± ACRES)

40,000 S.F. REQUIRED (4x10,000 S.F.) 389,210± S.F. PROVIDED

10.2.2 MAXIMUM PERMISSIBLE DENSITY:

AREA OUTSIDE OF WCD = 340,875± S.F. / 5,000 S.F. PER UNIT = 68 UNITS MAX
TWO TIMES THE BASIC DENSITY: (2 X 35 = 70 UNITS)
36 UNITS PROPOSED < 68 UNIT MAXIMUM O.K.

MINIMUM REQUIREMENT: 5,000 S.F. OF UPLAND PER DWELLING UNIT OUTSIDE WCD
5,000 S.F. x 36 UNITS=180,000 SF REQUIRED; 340,875± S.F. PROVIDED.

10.2.2.1 BASIC DENSITY:

AREA OUTSIDE WCD = 340,875 ± S.F.
AREA INSIDE WCD = 48,335 ± S.F.
PRD SITE AREA = 389,210 ± S.F.

$$\frac{(389{,}124-48{,}335) + [(.25)(48{,}335)]}{10{,}000\ \text{S.F.}} = 35.3\ \text{UNITS}$$

10.2.2.2 FRACTIONAL NUMBERS:

ONLY FRACTION OF (0.5) OR > = (1).
35.3 BASIC UNITS = 35 BASIC UNITS ALLOWED
36 UNITS PROPOSED (35 MARKET + ONE AFFORDABLE*)

*OPTION A: 36 MARKET UNITS & AFFORDABLE HOUSING DONATION.
*OPTION B: 35 MARKET UNITS (BASIC DENSITY WITHOUT AFFORDABLE).

10.2.5 LOT AREA, FRONTAGE AND YARD REQUIREMENTS:

LOT AREA & FRONTAGE – NO MINIMUM
YARD SETBACKS – NO MINIMUM, EXCEPT FOR
(20) TWENTY FEET TO PUBLIC WAY OR BOUNDARY LINE OF PRD

10.2.8 AREA OF RESIDENTIAL DEVELOPMENT: (± ACRES)

RESIDENTIAL USE SHALL NOT EXCEED 50% OF TOTAL AREA
389,210 S.F. X 0.5 = 194,605 S.F. MAXIMUM

RESIDENTIAL DRIVEWAYS = 58,512 ± S.F.
RESIDENTIAL BUILDINGS = 66,635 ± S.F.
AREA FOR RESIDENTIAL USE = 125,147 ± S.F.

125,147± S.F. < 194,605 S.F. (32.2% < 50% MAX).
EACH DWELLING UNIT: INDIVIDUAL OWNERS
PRD AREA: CONDOMINIUM ASSOCIATION

10.2.9 COMMON OPEN SPACE:

MUST EQUAL AT LEAST TWENTY FIVE (25) % OF TOTAL AREA
389,210 X 0.25 = 97,302 S.F. MINIMUM

10.2.9.2 COMMON OPEN SPACE:

COMMON OPEN SPACE AREA = 131,830± S.F. (33.8%)
33.8% PROVIDED > 25% MINIMUM O.K.

ANR LOT AREA = 10,722 ± S.F.
PRD SITE AREA = 389,210 ± S.F.
TOTAL PARCEL AREA = 389,932 ± S.F.

OWNER:

FAYE ERHARD HAYES
1450 MAIN STREET
CONCORD, MA 01742

LOCUS ADDRESS

1440, 1450, 1468 MAIN STREET & 10B HIGHLAND STREET
MAP 10D PARCELS 2407, 2408, 2409 & 2423

DEED REFERENCE:

1. BOOK 51940 PAGE 64

PLAN REFERENCES:

1. PLAN BOOK 98 PLAN 14
2. PLAN No. 94 OF 1943
3. PLAN No. 183 OF 1947

SHEET INDEX

SHEET 1	PRD LOCATION PLAN
SHEET 2	EXISTING CONDITION PLAN
SHEET 3	LAYOUT PLAN
SHEET 4	TOPOGRAPHIC PLAN
SHEET 5	UTILITY PLAN
SHEET 6-7	PLAN & PROFILE
SHEET 8-10	CONSTRUCTION DETAILS
SHEET 11-12	STORMWATER POLLUTION PREVENTION PLAN

PROJECT NOTES:

1. THE USE OF THIS PLANNED RESIDENTIAL DEVELOPMENT PLAN IS FOR PERMITTING PURPOSES ONLY WITH THE TOWN OF CONCORD.
2. PORTIONS OF THE PROPERTY LIE WITHIN THE WETLAND CONSERVANCY OVERLAY DISTRICT.
3. EXISTING TOPOGRAPHIC INFORMATION, LOCATION OF WETLAND FLAGS AND UTILITIY INFORMATION OBTAINED FROM "CENTER & MAIN, A PLANNED RESIDENTIAL DEVELOPMENT IN CONCORD, MASSACHUSETTS, FOR SYMES DEVELOPMENT & PERMITTING, LLC, SCALE: 1"=40', DATED JULY 11, 2018, PREPARED BY STAMSKI AND McNARY, INC., EXISTING CONDITIONS PLAN, STAMPED AND SIGNED BY JOSEPH MARCH, P.L.S. AND GEORGE DIMAKARAKOS, P.E."; ON FILE AT PLANNING BOARD OFFICE.
4. THE ISOLATED VEGETATED WETLANDS WERE DELINEATED BY SEEKAMP ENVIRONMENTAL CONSULTING, INC.; SEE MASSDEP ORAD FILE NUMBER 137-1408. ANY PROPOSED WETLAND FILLING INDICATED SHALL BE LIMITED TO LESS THAN 5,000 SQUARE FEET.
5. ALL ELEVATIONS SHOWN ARE REFERENCED TO THE NORTH AMERICAN VERTICAL DATUM OF 1988 (N.A.V.D. OF 1988).
6. THE UTILITIES SHOWN WERE OBTAINED FROM PLAN REFERENCED IN NOTE 2. ABOVE AND FROM VARIOUS PLANS ON FILE WITH THE TOWN OF CONCORD. NO REPRESENTATION OR WARRANTEE IS MADE AS TO THE ACCURACY OF THE LOCATION OF THE SUBSURFACE UTILITIES DEPICTED OR NOT DEPICTED AND SHOULD BE CONSIDERED APPROXIMATE. VERIFY UTILITIES PRIOR TO CONSTRUCTION.
7. THE PROPOSED WATER MAIN CONNECTION SIZE, TYPE & LOCATION ARE SUBJECT TO FINAL REVIEW AND ADJUSTMENT DURING DEFINITIVE PLAN DESIGN.
8. THE USE OF THIS PLAN IS SUBJECT TO THE ISSUANCE OF AN EARTH REMOVAL SPECIAL PERMIT FROM THE TOWN OF CONCORD ZONING BOARD OF APPEALS.
9. THREE BUILDINGS (UNIT 1, UNIT 2 & UNIT 4) WILL BE SERVED BY TOWN SEWER. THE REMAINING BUILDINGS WILL BE SERVED BY A TITLE 5, ONSITE PRIVATE SUBSURFACE SEWAGE DISPOSAL SYSTEM, SIZED FOR NINETY (90) BEDROOMS WITH A DESIGN FLOW EQUAL TO 9,900 GALLONS PER DAY (GPD).
10. THE PROPOSED BUILDINGS SHOWN, WERE OBTAINED FROM PLANS DATED MARCH 10, 2019; PREPARED BY: ELISE BRACERAS STONE ARCHITECT; 289 OLD MARLBOROUGH ROAD, CONCORD, MA. (www.elisestonearchitect.com).

WILLIAMS & SPARAGES
ENGINEERS LAND SURVEYORS
135 ROSS WAY, 11 MAIN STREET
SUITE 101
MIDDLETON, MA 01949
PHONE (978) 539-9400
FAX (978) 539-8200
WSENGINEERS.COM

Owner:
Faye Erhard Hayes
1450 Main Street
Concord, MA 01742

Applicant:
Symes Development & Permitting, LLC
50 Dodge Street, Suite 202
Beverly, MA 01915

Designed By: RJH
Drawn By: RJH
Reviewed By: RJH
Project Manager: RJH
Job File Number: CONC-0020
Drawing File Folder: MAIN0020

☐ Drawing Issued for Review Only
☒ Drawing Issued for Permit
☐ Drawing Issued for Construction

SEAL

COMMONWEALTH OF MASSACHUSETTS
RICHARD J. HERRINGTON
CIVIL
No. 41290
REGISTERED PROFESSIONAL ENGINEER
6/14/2019

PRD LOCATION PLAN
CENTER & MAIN
1440 MAIN STREET, CONCORD, MA

6	
5	
4	
3	REVISED JUNE 14, 2019
2	REVISED MARCH 28, 2019 (1-Car Units 12, 15, 17, 19, 23 & 36)
1	REVISED MARCH 12, 2019

0' 50' 100' 200'
SCALE: 1"=100'

DECEMBER 6, 2018

DRAWING: 1.1

SHEET 1 OF 12

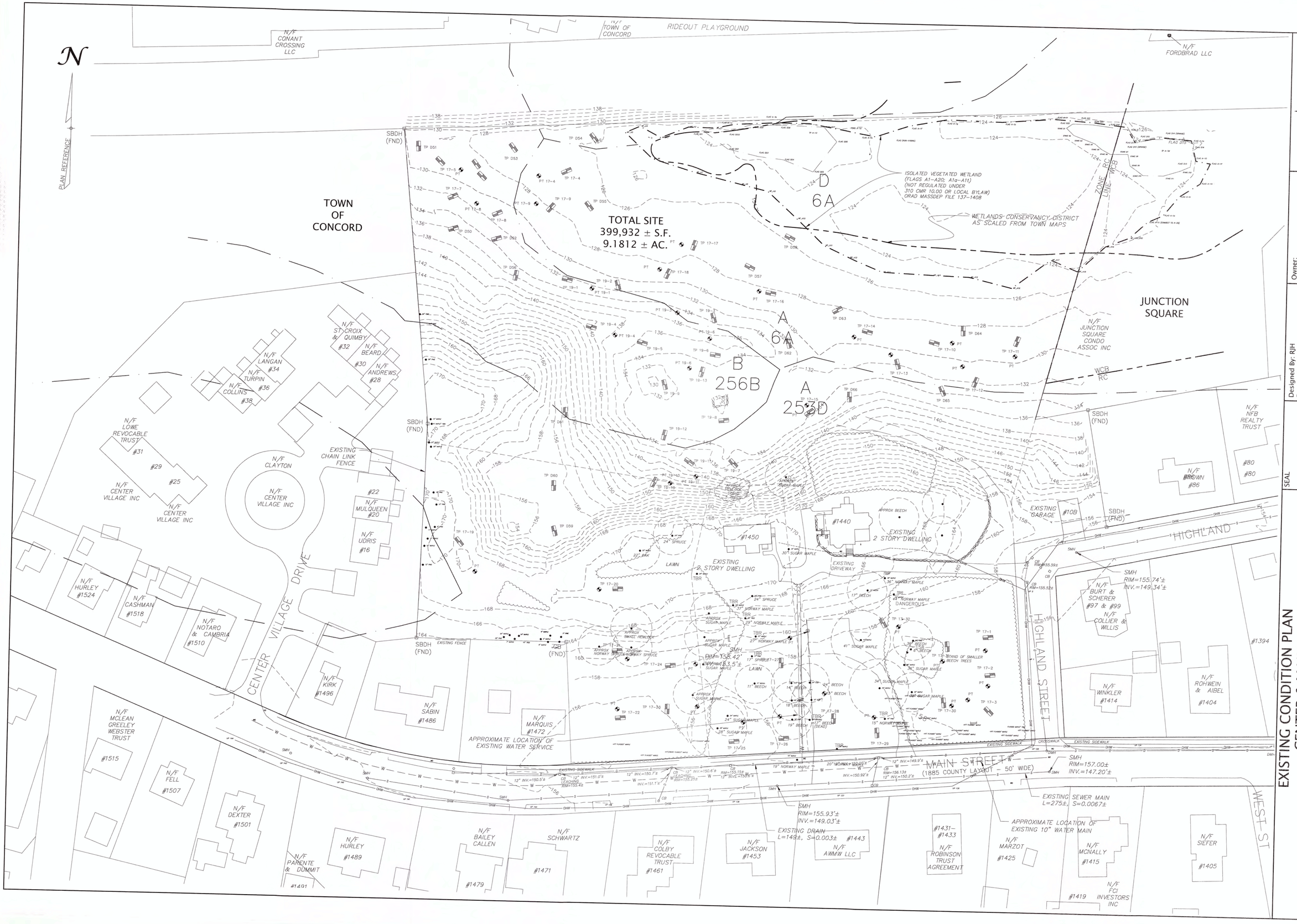

WILLIAMS & SPARAGES
ENGINEERS · PLANNERS · SURVEYORS
189 NORTH MAIN STREET
SUITE 101
MIDDLETON, MA 01949
PHONE: (978) 539-8088
FAX: (978) 539-8200
WSENGINEERS.COM

Owner:
Faye Erhard Hayes
1450 Main Street
Concord, MA 01742

Applicant:
Symes Development & Permitting, LLC
50 Dodge Street, Suite 202
Beverly, MA 01915

Designed By: RJH
Drawn By: RJH
Reviewed By: RJH
Project Manager: RJH
Job File Number: CONC-0020
Drawing File Folder: MAIN0020

- Drawing Issued for Review Only
- Drawing Issued for Permit
- Drawing Issued for Construction

SEAL

COMMONWEALTH OF MASSACHUSETTS
JOHN J. O'ROURKE III
No. 49904
PROFESSIONAL LAND SURVEYOR
6/14/2019

EXISTING CONDITION PLAN
CENTER & MAIN
1440 MAIN STREET, CONCORD, MA

6	
5	
4	
3	REVISED JUNE 14, 2019
2	REVISED MARCH 28, 2019 (1-Car Units 12, 15, 17, 19, 23 & 36)
1	REVISED MARCH 12, 2019

0' 20' 40' 80'
SCALE: 1"=40'

DECEMBER 6, 2018

DRAWING: 2.1

SHEET 2 OF 12

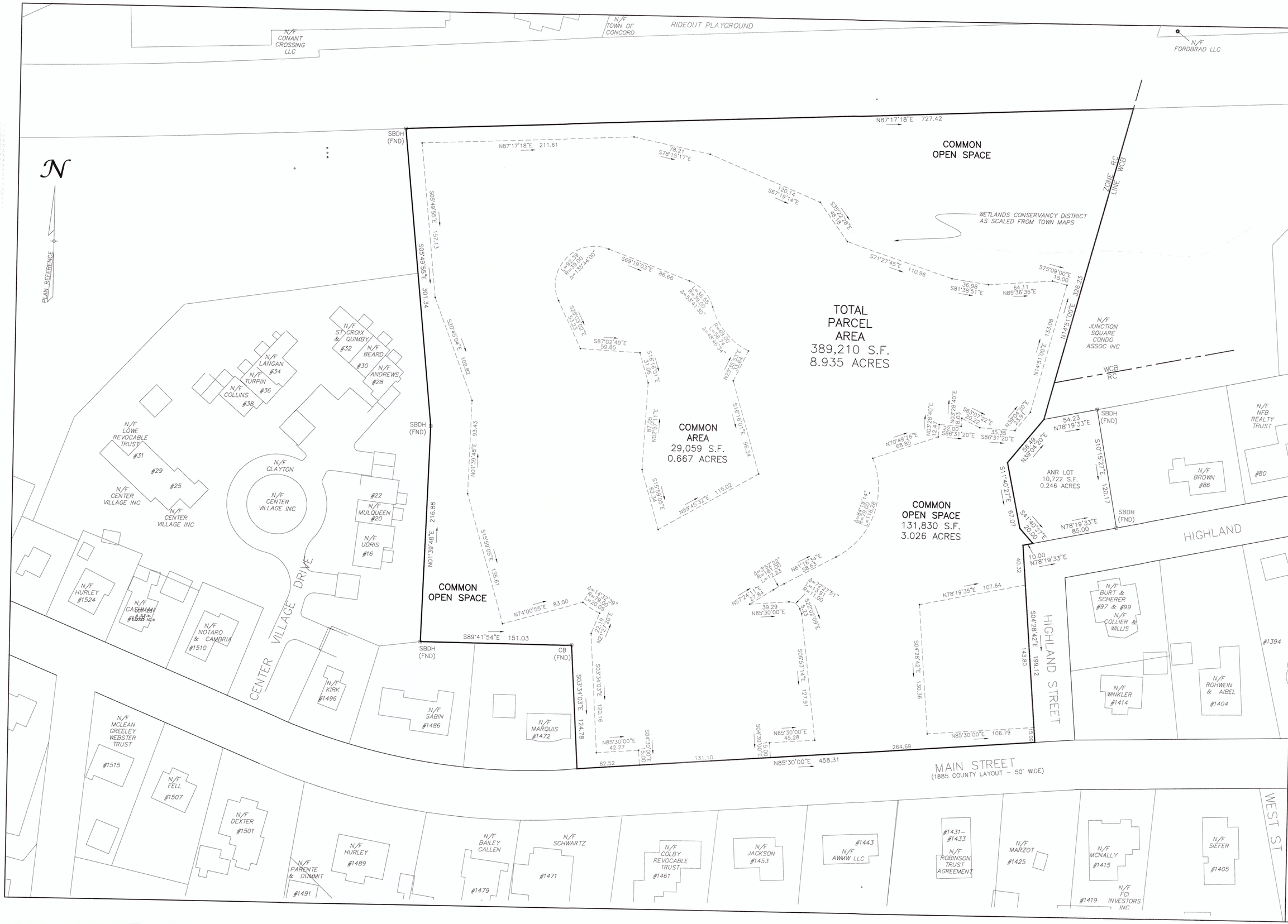

WILLIAMS & SPARAGES
PROFESSIONAL LAND SURVEYORS
188 NORTH MAIN STREET
SUITE 101
MIDDLETON, MA 01949
PHONE: (978) 539-8088
FAX: (978) 539-2200
WSLANDSURVEY.COM

Owner:
Faye Erhard Hayes
1450 Main Street
Concord, MA 01742

Applicant:
Symes Development & Permitting, LLC
50 Dodge Street, Suite 202
Beverly, MA 01915

Designed By: RJH
Drawn By: RJH
Reviewed By: RJH
Project Manager: RJH
Job File Number: CONC-0020
Drawing File Folder: MAIN0020

☐ Drawing Issued for Review Only
☒ Drawing Issued for Permit
☐ Drawing Issued for Construction

SEAL

COMMONWEALTH OF MASSACHUSETTS
JOHN J. O'ROURKE III
No. 49904
PROFESSIONAL LAND SURVEYOR
6/14/2019

6	
5	
4	
3	REVISED JUNE 14, 2019
2	REVISED MARCH 28, 2019 (1-Car Units 12, 15, 17, 19, 23 & 36)
1	REVISED MARCH 12, 2019

LAYOUT PLAN
CENTER & MAIN
1440 MAIN STREET, CONCORD, MA

0' 20' 40' 80'
SCALE: 1"=40'

DECEMBER 6, 2018

DRAWING: 3.1

SHEET 3 OF 12

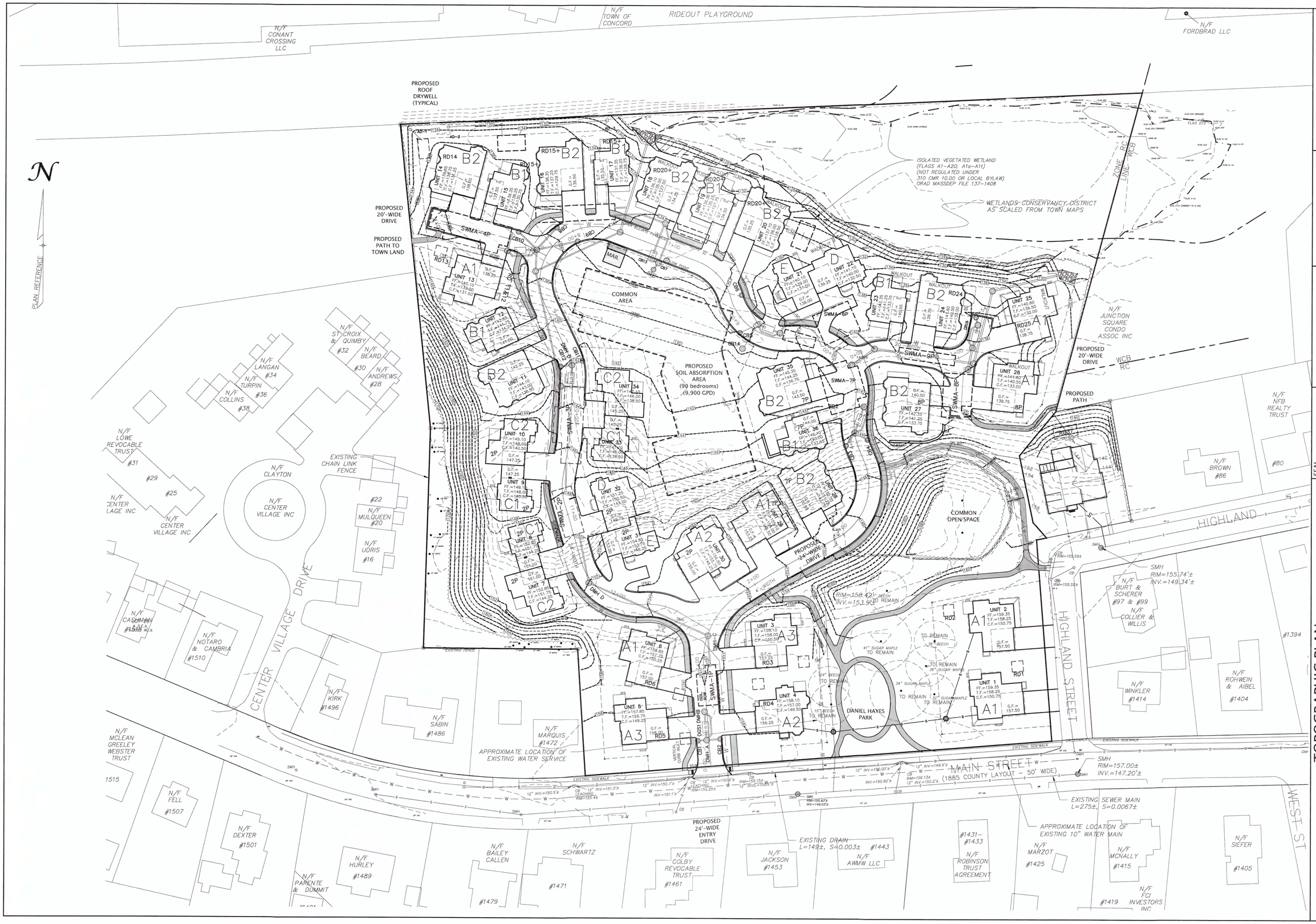

WILLIAMS & SPARAGES
ENGINEERS • PLANNERS • SURVEYORS
189 NORTH MAIN STREET
SUITE 201
MIDDLETON, MA 01949
PHONE: (978) 539-8088
FAX: (978) 539-8080
WSENGINEERS.COM

Owner:
Faye Erhard Hayes
1450 Main Street
Concord, MA 01742

Applicant:
Symes Development & Permitting, LLC
50 Dodge Street, Suite 202
Beverly, MA 01915

Designed By: RJH
Drawn By: RJH
Reviewed By: RJH
Project Manager: RJH
Job File Number: CONC-0020
Drawing File Folder: MAIN0020

☐ Drawing Issued for Review Only
☒ Drawing Issued for Permit
☐ Drawing Issued for Construction

SEAL

COMMONWEALTH OF MASSACHUSETTS
RICHARD J. HARRINGTON
No. 41298
PROFESSIONAL ENGINEER
6/14/19

6	
5	
4	
3	REVISED JUNE 14, 2019
2	REVISED MARCH 28, 2019 (1-Car Units 12, 15, 17, 19, 23 & 36)
1	REVISED MARCH 12, 2019

TOPOGRAPHIC PLAN
CENTER & MAIN
1440 MAIN STREET, CONCORD, MA

0' 20' 40' 80'
SCALE: 1"=40'

DECEMBER 6, 2018

DRAWING: 4.1

SHEET 4 OF 12

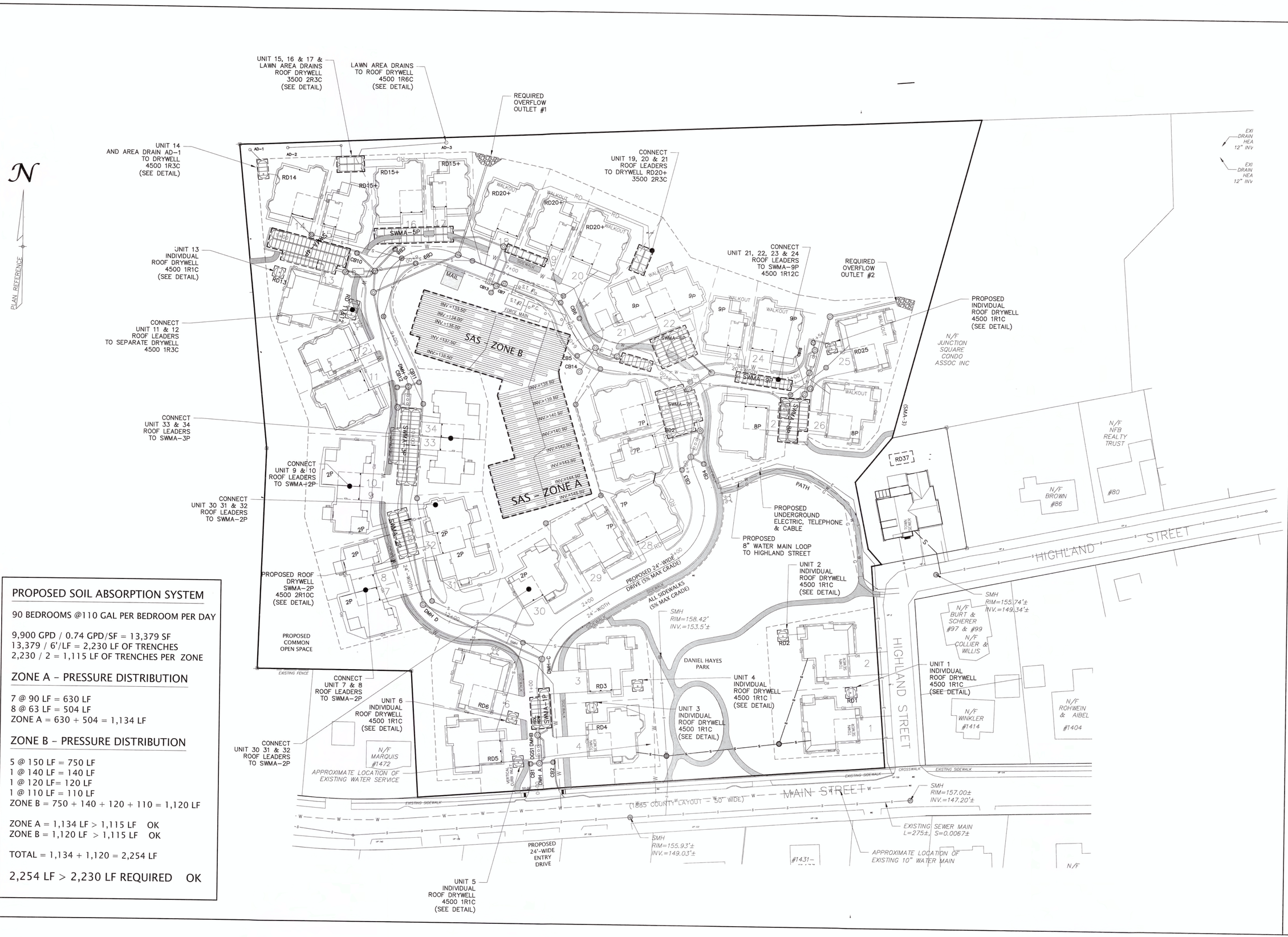

PROPOSED SOIL ABSORPTION SYSTEM

90 BEDROOMS @110 GAL PER BEDROOM PER DAY

9,900 GPD / 0.74 GPD/SF = 13,379 SF
13,379 / 6'/LF = 2,230 LF OF TRENCHES
2,230 / 2 = 1,115 LF OF TRENCHES PER ZONE

ZONE A - PRESSURE DISTRIBUTION

7 @ 90 LF = 630 LF
8 @ 63 LF = 504 LF
ZONE A = 630 + 504 = 1,134 LF

ZONE B - PRESSURE DISTRIBUTION

5 @ 150 LF = 750 LF
1 @ 140 LF = 140 LF
1 @ 120 LF= 120 LF
1 @ 110 LF = 110 LF
ZONE B = 750 + 140 + 120 + 110 = 1,120 LF

ZONE A = 1,134 LF > 1,115 LF OK
ZONE B = 1,120 LF > 1,115 LF OK

TOTAL = 1,134 + 1,120 = 2,254 LF

2,254 LF > 2,230 LF REQUIRED OK

WILLIAMS & SPARAGES
ENGINEERING LAND SURVEYING
189 NORTH MAIN STREET
SUITE 1
MIDDLETON, MA 01949
PHONE: (978) 539-8088
FAX: (978) 539-8200
WWW.WSENGINEERS.COM

Owner:
Faye Erhard Hayes
1450 Main Street
Concord, MA 01742

Applicant:
Symes Development & Permitting, LLC
50 Dodge Street, Suite 202
Beverly, MA 01915

Designed By: RJH
Drawn By: RJH
Reviewed By: RJH
Project Manager: RJH
Job File Number: CONC-0020
Drawing File Folder: MAIN0020

- [ ] Drawing Issued for Review Only
- [ ] Drawing Issued for Permit
- [x] Drawing Issued for Construction

SEAL

COMMONWEALTH OF MASSACHUSETTS
RICHARD J. HIGHNETTE
CIVIL
No. 41298
PROFESSIONAL ENGINEER
6/14/19

6	
5	
4	REVISED JUNE 14, 2019
3	REVISED MARCH 28, 2019 (1-Car Units 12, 15, 17, 19, 23 & 36)
2	REVISED MARCH 12, 2019
1	

UTILITY PLAN CENTER & MAIN

1440 MAIN STREET, CONCORD, MA

0' 20' 40' 80'
SCALE: 1"=40'

DECEMBER 6, 2018

DRAWING: 5.1

SHEET 5 OF 12

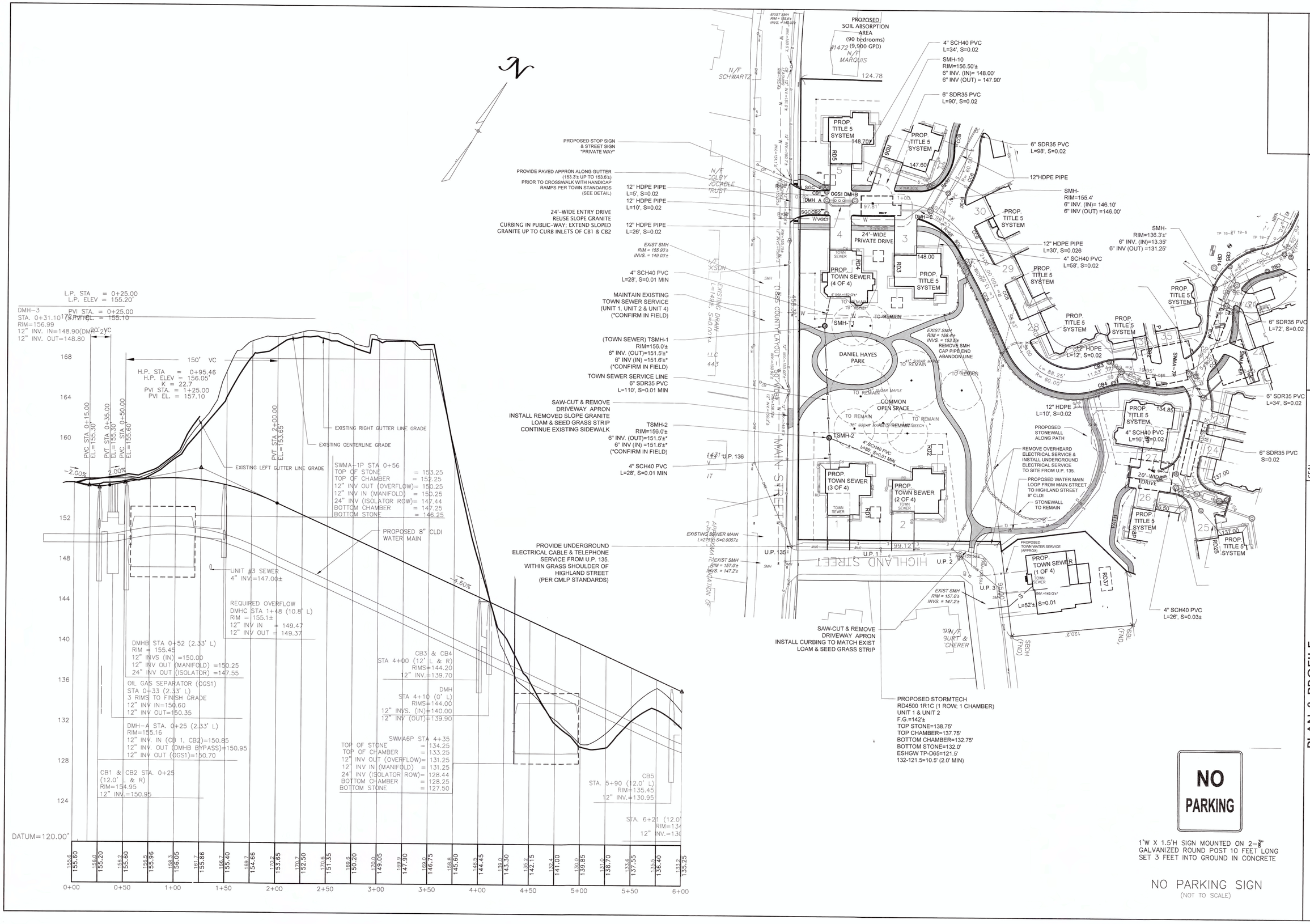

NO PARKING

1'W X 1.5'H SIGN MOUNTED ON 2-3/8" GALVANIZED ROUND POST 10 FEET LONG SET 3 FEET INTO GROUND IN CONCRETE

NO PARKING SIGN
(NOT TO SCALE)

WILLIAMS & SPARAGES
CIVIL ENGINEERS · LAND SURVEYORS
189 NORTH MAIN STREET
SUITE 201
MIDDLETON, MA 01949
PHONE: (978) 539-8088
FAX: (978) 539-2200
WSENGINEERS.COM

Owner:
Faye Erhard Hayes
1430 Main Street
Concord, MA 01742

Applicant:
Symes Development & Permitting, LLC
50 Dodge Street, Suite 202
Beverly, MA 01915

Designed By: RJH
Drawn By: RJH
Reviewed By: RJH
Project Manager: RJH
Job File Number: CONC-0020
Drawing File Folder: MAIN0020

☐ Drawing Issued for Review Only
☒ Drawing Issued for Permit
☐ Drawing Issued for Construction

SEAL

COMMONWEALTH OF MASSACHUSETTS · RICHARD J. HARRINGTON · CIVIL · No. 47258 · REGISTERED PROFESSIONAL ENGINEER

3/14/19

PLAN & PROFILE CENTER & MAIN

1440 MAIN STREET, CONCORD, MA

6	
5	
4	
3	REVISED MARCH 28, 2019 (1-Car Units 12, 15, 17, 19, 23 & 36)
2	REVISED JUNE 14, 2019
1	REVISED MARCH 12, 2019

0' 20' 40' 80'
SCALE: 1"=40'

DECEMBER 6, 2018

DRAWING: 6.1

SHEET 6 OF 12

WILLIAMS & SPARAGES
CIVIL ENGINEERS
LAND SURVEYORS
189 NORTH MAIN STREET
SUITE 1
MIDDLETON, MA 01949
PHONE: (978) 539-8088
FAX: (978) 539-2080
WSENGINEERS.COM

Owner:
Faye Erhard Hayes
1430 Main Street
Concord, MA 01742

Applicant:
Symes Development & Permitting, LLC
50 Dodge Street, Suite 202
Beverly, MA 01915

Designed By: RJH
Drawn By: RJH
Reviewed By: RJH
Project Manager: RJH
Job File Number: CONC-0020
Drawing File Folder: MAIN0020

☐ Drawing Issued for Review Only
☒ Drawing Issued for Permit
☐ Drawing Issued for Construction

SEAL

COMMONWEALTH OF MASSACHUSETTS
RICHARD J. HARRINGTON
No. 41298
PROFESSIONAL ENGINEER
6/14/19

PLAN & PROFILE
CENTER & MAIN
1440 MAIN STREET, CONCORD, MA

0' 20' 40' 80'
SCALE: 1"=40'

DECEMBER 6, 2018

6	
5	
4	
3	REVISED JUNE 14, 2019
2	REVISED MARCH 28, 2019 (1-Car Units 12, 15, 17, 19, 23 & 36)
1	REVISED MARCH 12, 2019

DRAWING: 6.2

SHEET 7 OF 12

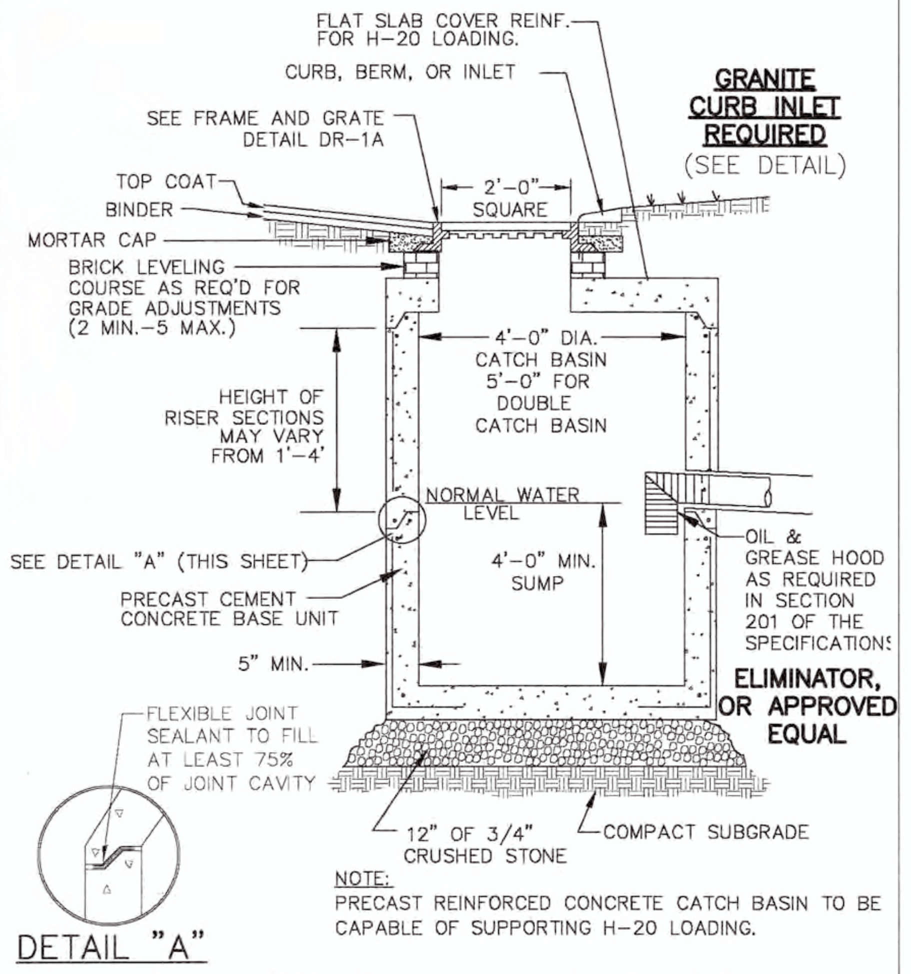

NOTE:
PRECAST REINFORCED CONCRETE CATCH BASIN TO BE CAPABLE OF SUPPORTING H-20 LOADING.

STANDARD CATCH BASIN DETAIL

(NOT TO SCALE)

PER TOWN OF CONCORD-PUBLIC WORKS PLAN NO. DR-1

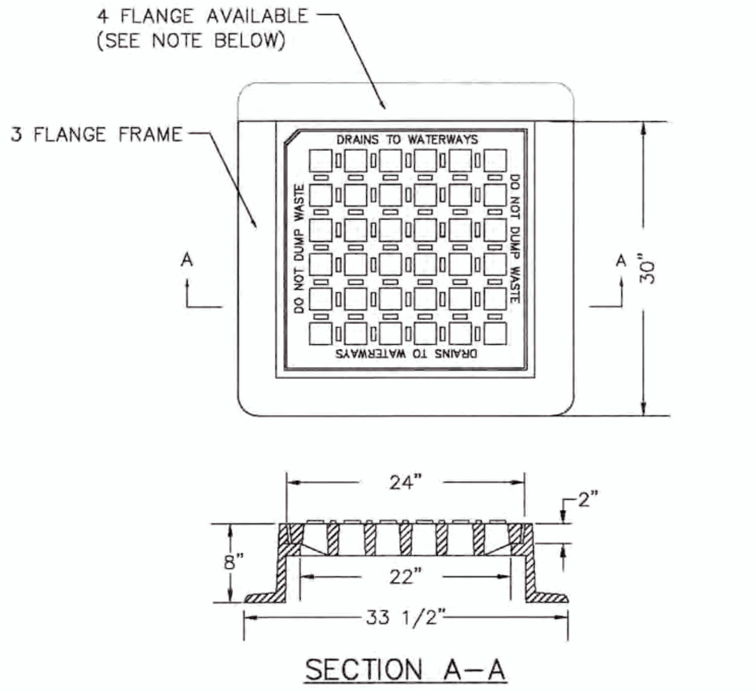

NOTE:
FRAME EJ CATALOG NO. 0MA552000029
GRATE EJ CATALOG NO. 0MA552000075
OR APPROVED EQUAL.

3 FLANGE FRAMES TO BE USED WHERE INLET IS ADJACENT TO CURB STONES, 4 FLANGE FRAME TO BE USED ELSEWHERE.

"DO NOT DUMP WASTE, DRAINS TO WATERWAYS" SHALL BE FORGED INTO THE GRATE.

CATCH BASIN FRAME AND GRATE

(NOT TO SCALE)

PER TOWN OF CONCORD-PUBLIC WORKS; PLAN NO. DR-1A

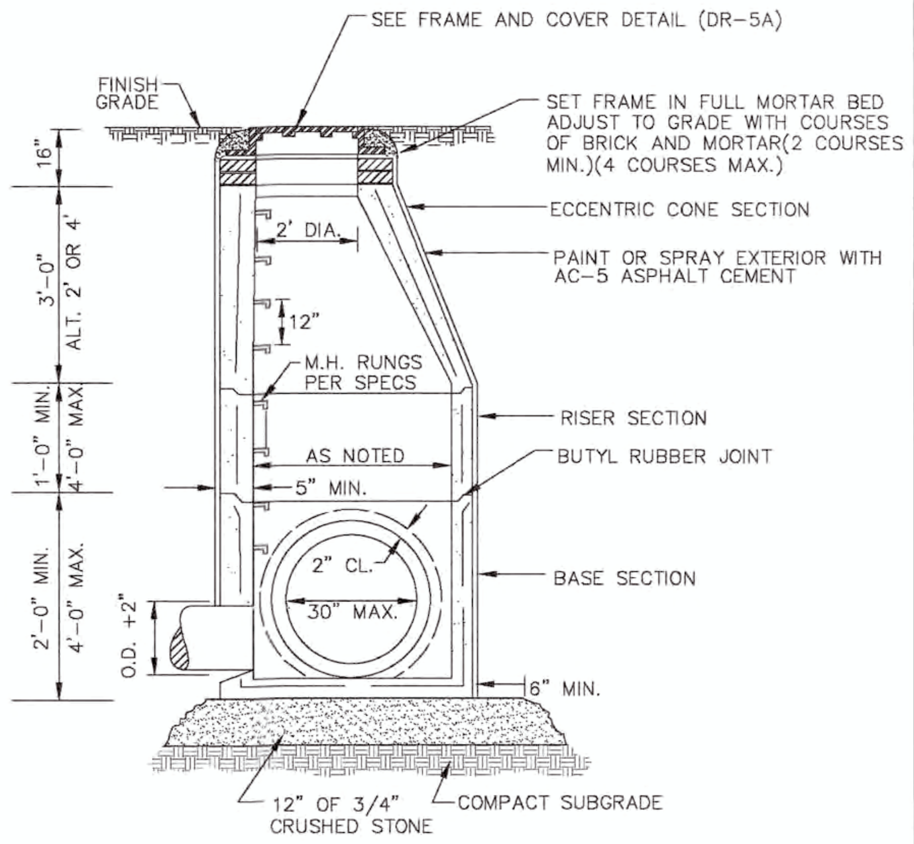

NOTE:
PRECAST REINFORCED CONCRETE MANHOLE TO BE CAPABLE OF SUPPORTING H-20 LOADING

STANDARD DRAINAGE MANHOLE DETAIL

(NOT TO SCALE)

PER TOWN OF CONCORD-PUBLIC WORKS PLAN NO. DR-5

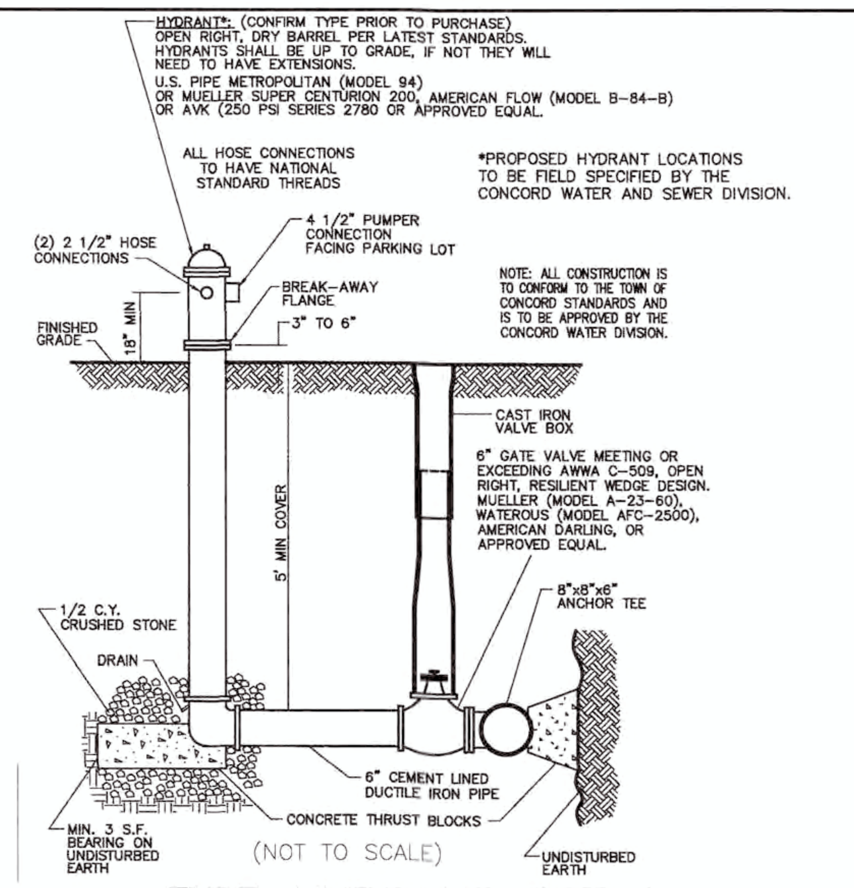

FIRE HYDRANT DETAIL

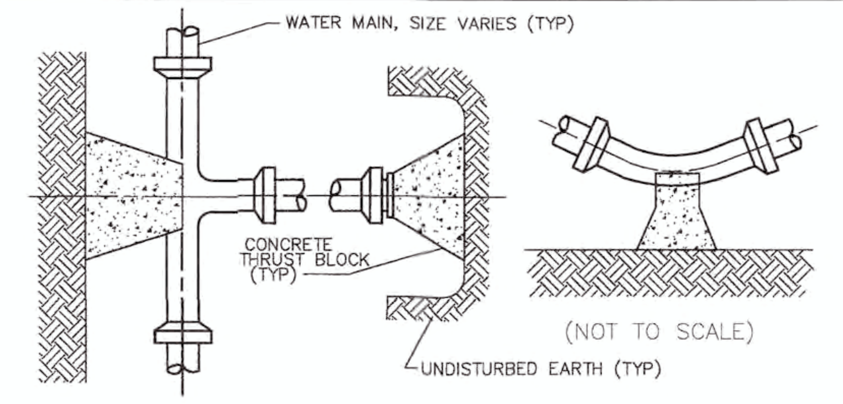

TYPICAL THRUST BLOCK DETAIL

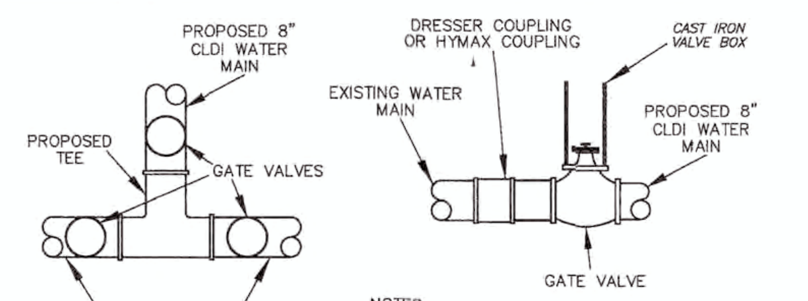

NOTES:
1. ALL CONSTRUCTION SHALL CONFORM TO THE CONCORD PUBLIC WORKS WATER AND SEWER DIVISION MATERIAL AND INSTALLATION REQUIREMENTS.

WATER MAIN CONNECTION DETAIL

(NOT TO SCALE)

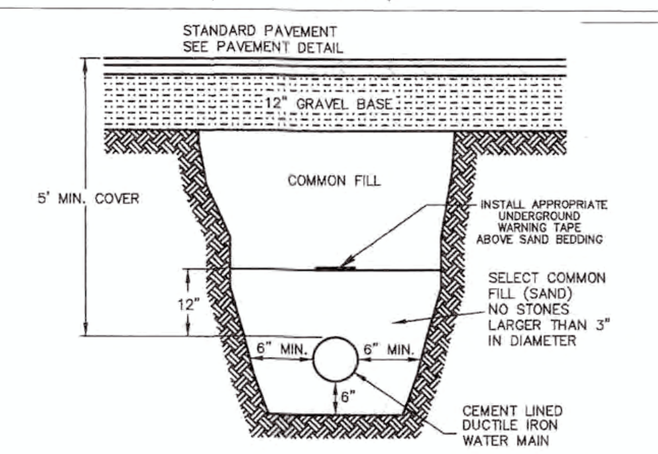

1. A THRUST BLOCK SHALL BE PROVIDED AT ALL BENDS AND ENDS OF WATERMAIN.
2. ALL WORK AND PAVEMENT REPAIR SHALL BE PERFORMED UNDER THE DIRECTION OF THE TOWN ENGINEER AND WATER SUPERINTENDENT IN ACCORDANCE WITH TOWN STANDARDS.
3. AN "AS-BUILT" DRAWING OF THE INSTALLATION SHALL BE FURNISHED TO THE TOWN BEFORE SERVICE IS ESTABLISHED.

WATER MAIN TRENCH DETAIL

(NOT TO SCALE)

WATER SERVICE NOTES:

1. SERVICE LINES SHALL NOT BE PLACED WITHIN 10 FEET OF PIPES CARRYING WASTEWATER OR ASSOCIATED INFRASTRUCTURE, OR WITHIN 3 FEET OF ANY OTHER UTILITIES EXCEPT UNDER SPECIAL CONDITIONS AND WITH THE PRIOR APPROVAL OF THE SUPERINTENDENT.
2. CARE SHALL BE EXERCISED IN THE PLACING AND LAYING OF TUBING TO BE SURE THAT THE PIPE DOES NOT HAVE KINKS OR IS NOT PLACED ON SHARP STONES OR LEDGE WHICH WOULD CAUSE DAMAGE TO THE PIPE.
3. MINIMUM BURIED DEPTH OF SERVICE SHALL BE 5-FT.
4. PLACE AT LEAST SIX INCHES OF SAND, ADJACENT TO, ABOVE AND BELOW THE TUBING.
5. NO STONE SHALL BE DROPPED ON THE TUBING UNTIL THE DEPTH OF BACKFILL ABOVE THE TUBING IS IN EXCESS OF ONE FOOT.
6. WATER SERVICE PIPE SHALL BE DENOTED USING TRACER TAPE WITH MARKING OF 'WATER PIPE BELOW".
7. SERVICE LINE: UNLESS OTHERWISE SPECIFIED, SERVICE MATERIALS SHALL BE ULTRA-HIGH MOLECULAR WEIGHT POLYETHYLENE (PE) BLACK TUBING WITH A PRESSURE RATING OF 200 PSI AND SHALL CONFORM TO AWWA C901-PLOYETHYLENE TUBING, ASTM D-1248, ASTM D-2737. COPPER TUBE SIZES SHALL BE USED TO ALLOW THE USE OF COMPRESSION FITTINGS WITHOUT SPECIAL ADAPTERS.
8. SERVICE BRASS: ALL FITTINGS, CONNECTIONS, CORPORATIONS, CURB STOPS, AND SERVICE APPURTENANCES SHALL CONFORM TO AWWA STANDARD C-800 (LATEST REVISION) AND PACK JOINT END CONNECTIONS SHALL CONSIST OF BUNA-N BEVELED GASKET FOR WATERTIGHT SEAL. AN INDEPENDENT, SPLIT-CLAMP LOCKING DEVICE OR STAINLESS STEEL BEVELED GRIPPER SHALL BE INCORPORATED IN THE DESIGN FOR ADDITIONAL RESTRAINT. FORD, MUELLER, MACDONALD AND CAMBRIDGE SERVICE BRASS IS ACCEPTED WITHOUT SUBSTITUTE.
9. CURB BOX: THE CURB BOX SHALL BE CAST IRON OR STAINLESS STEEL.
10. METER INSTALLATION: NEW METER INSTALLATIONS SHALL INCLUDE APPROVED WIRING TO CONNECT THE WATER METER REGISTER TO A TOUCH PAD LOCATED OUTSIDE THE BUILDING IN THE IMMEDIATE VICINITY OF THE ELECTRIC METER, UNLESS OTHERWISE SPECIFIED. ALL METERS SHALL BE INSTALLED AT THE NEAREST POINT PRACTICAL TO WHERE THE SERVICE CONNECTION ENTERS THE PREMISES, UNLESS THE SUPERINTENDENT REQUIRES THE INSTALLATION OF A METER PIT. A SHUTOFF VALVE AT THE METER INLET SHALL BE THE FIRST FITTING INSIDE A SERVICED BUILDING. A STOP VALVE SHALL BE INSTALLED NEAR THE OUTLET OF THE METER TO PERMIT REMOVAL OF THE METER WITHOUT BACKFLOW FROM THE PREMISES' INTERNAL WATER SYSTEM. THE LOCATION OF ALL METERS AND ASSOCIATED PIPING SHALL PROVIDE SUFFICIENT ROOM FOR FUTURE SERVICE/REPAIR WORK AND REQUIRES THE APPROVAL OF THE SUPERINTENDENT.

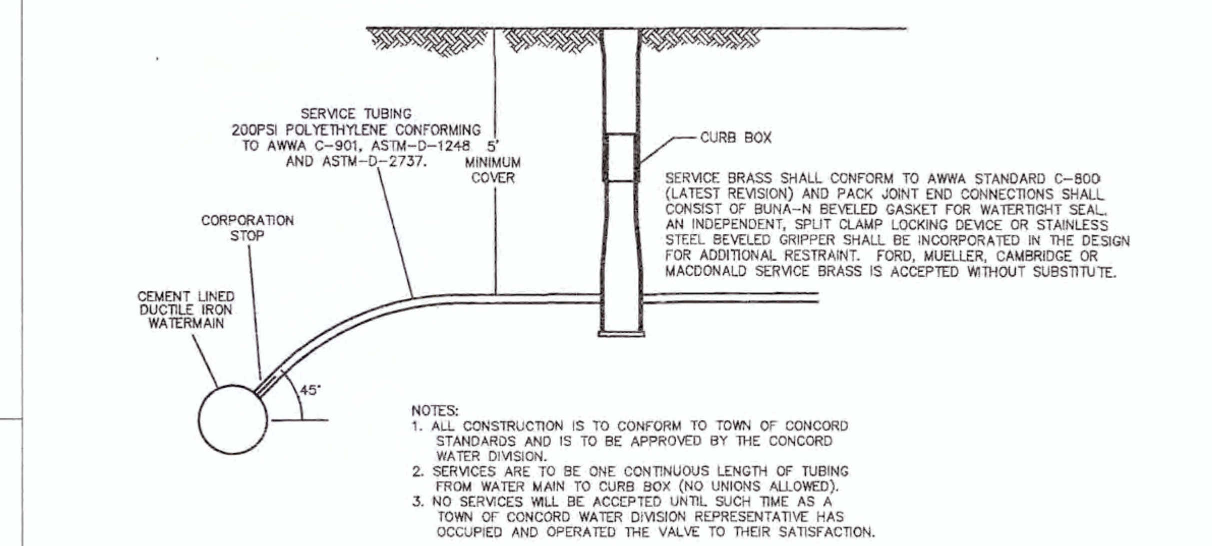

WATER SERVICE TUBING CONNECTION DETAIL

(NOT TO SCALE)

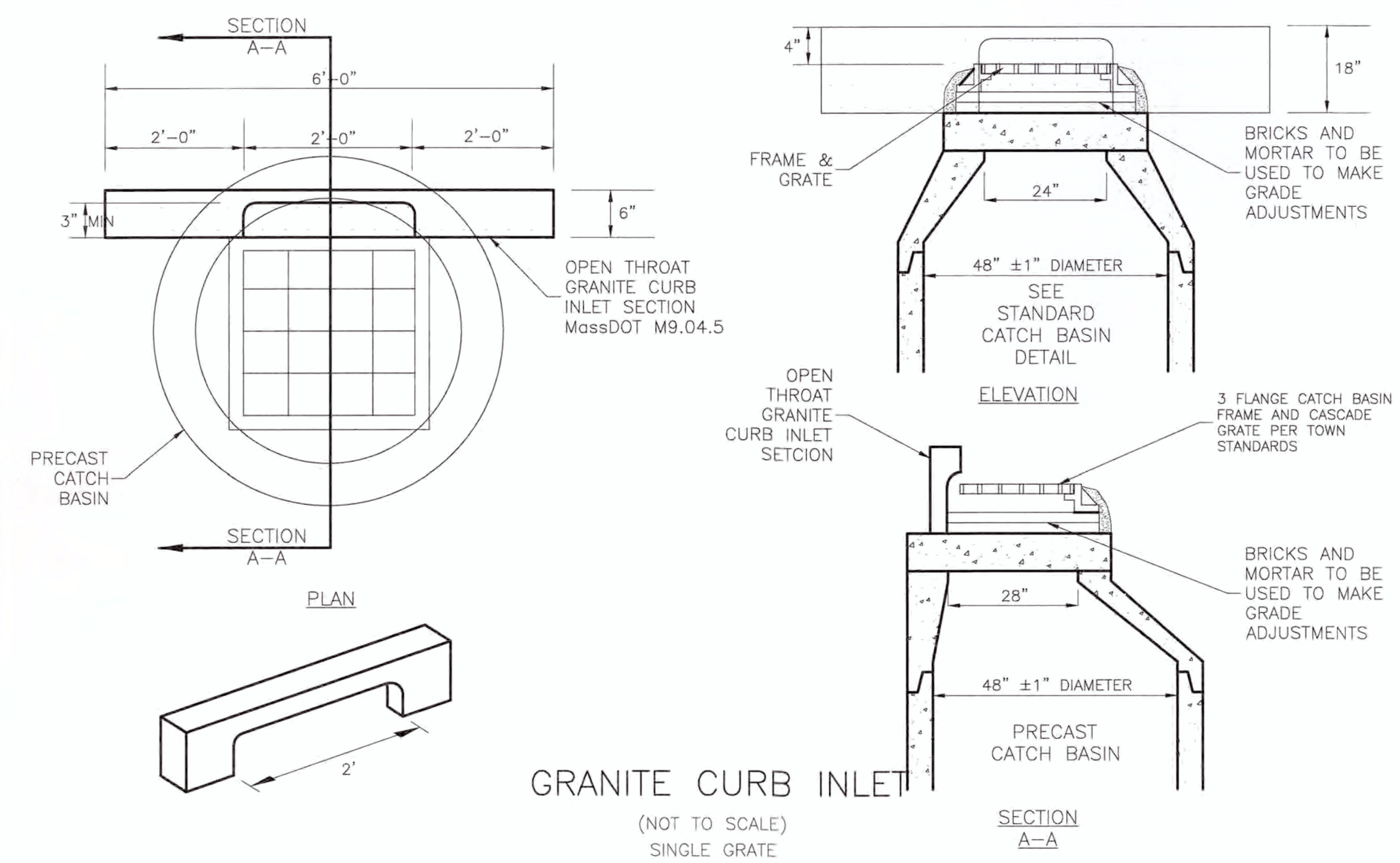

GRANITE CURB INLET

(NOT TO SCALE)

SINGLE GRATE

ABBREVIATIONS:

STREET =	ST
AVENUE =	AVE
PLACE =	PL
WAY =	WAY
BOULEVARD =	BLVD
PARKWAY =	PKWY
LANE =	LN
COURT =	CT
DRIVE =	DR
ROAD =	RD
CIRCLE =	CIR
RIDGE =	RDG

OTHER ABBREVIATIONS USE MUTCD TABLE 1A-1

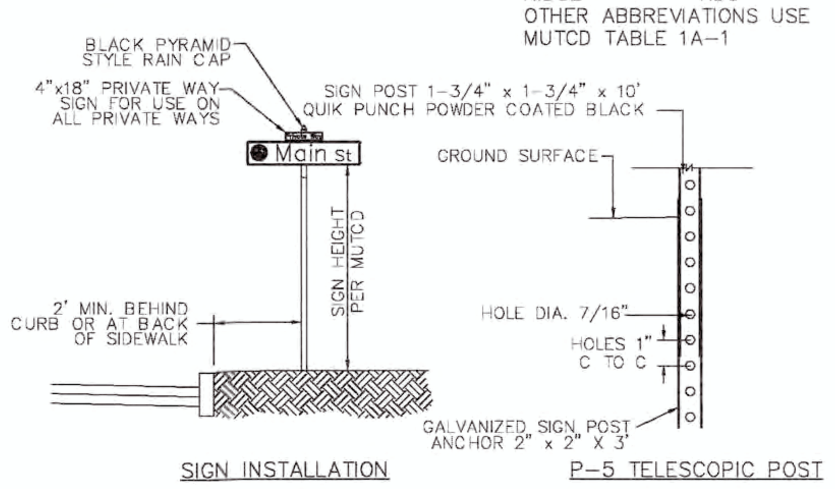

NOTES
1. ALL STREET NAME SIGNS SHALL CONSIST OF 2 SINGLE SIDED SIGNS MOUNTED BACK TO BACK 9" x VARIES FLAT ALUMINUM, 0.080 GAUGE
2. BACKGROUND AND COPY: 6" WHITE LETTERS ON GREEN BACKGROUND WITH WHITE BORDER. HIGH INTENSITY PRISMATIC SHEETING. TYPEFACE AND SPACING TO MEET MUTCD STANDARDS
3. ALL STREET NAME SIGNS SHALL HAVE THE CONCORD TOWN SEAL IN FULL COLOR TO THE LEFT OF THE STREET NAME.

STREET NAME SIGNS

(NOT TO SCALE)

PER TOWN OF CONCORD-PUBLIC WORKS PLAN NO. RS-25

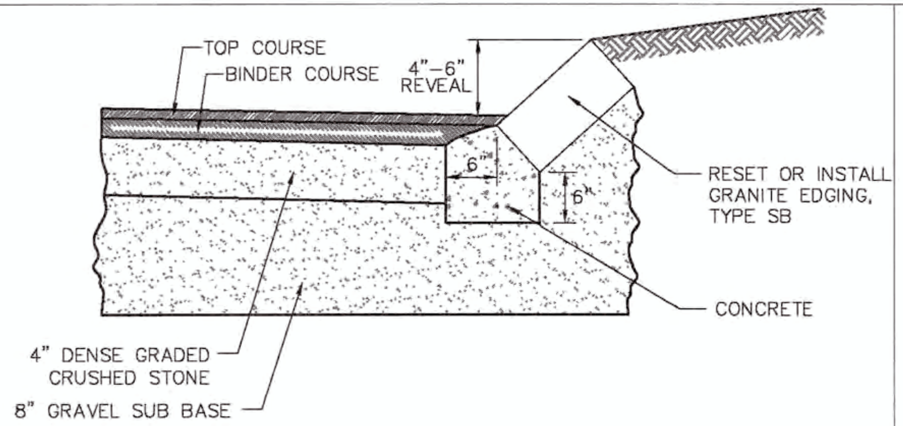

SLOPED GRANITE EDGING

(NOT TO SCALE)

PER PLAN NO. RS-4

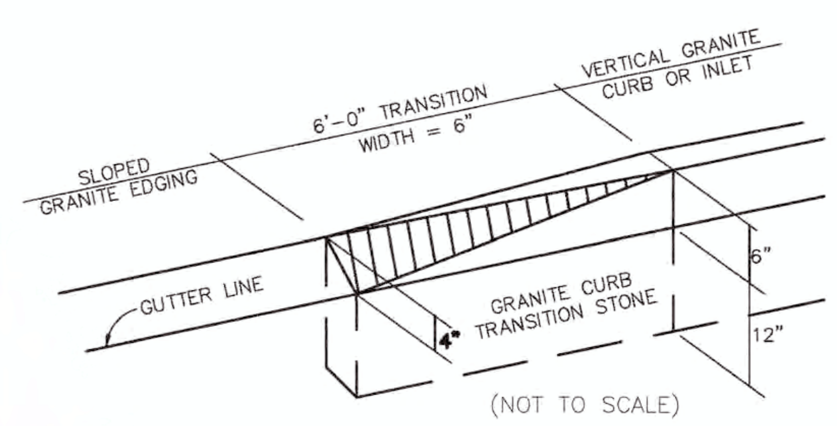

EDGING TO CURB TRANSITION

PER TOWN OF CONCORD-PUBLIC WORKS; PLAN NO. RS-5

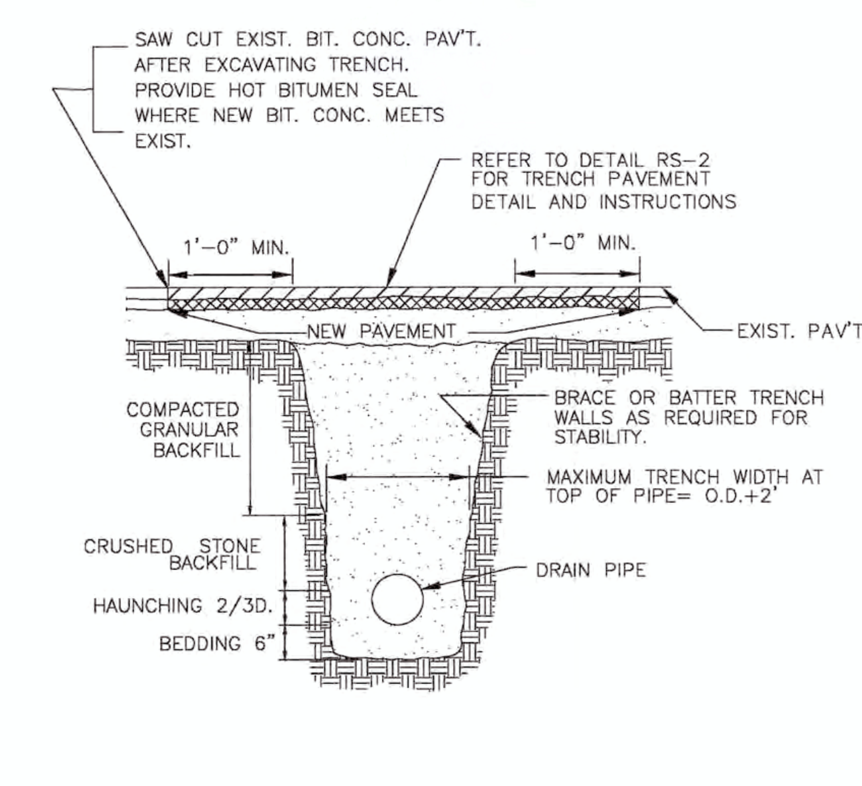

NOTE:
BEDDING AND HAUNCHING SHALL BE 3/4" STONE

TRENCH FOR DRAIN PIPE DETAIL

(NOT TO SCALE)

PER TOWN OF CONCORD-PUBLIC WORKS PLAN NO. DR-7

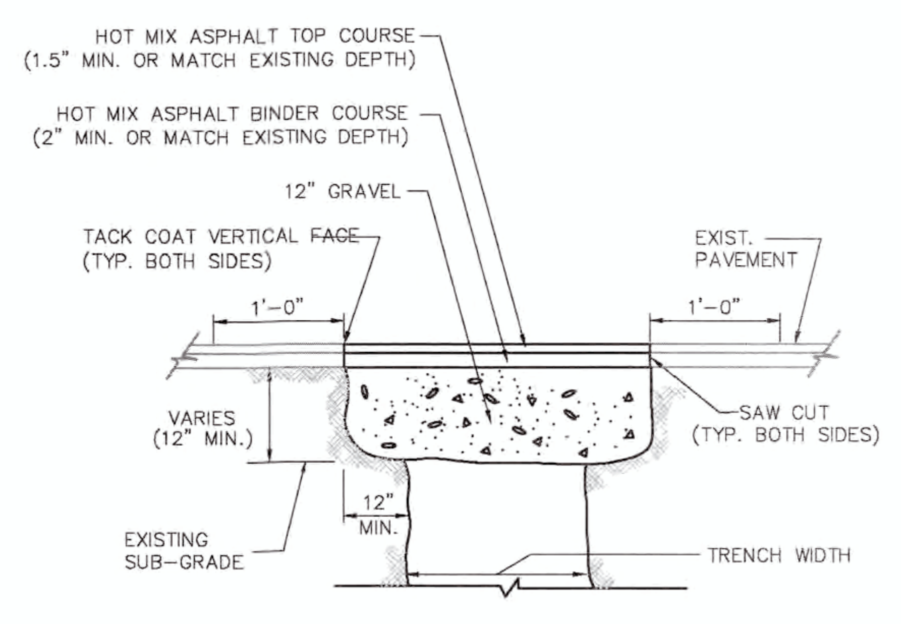

NOTES:
1. 12" OF GRAVEL BASE COURSE SHALL BE COMPACTED TO 95% OF MAXIMUM DRY DENSITY.
2. HOT MIX ASPHALT TRENCH PATCH SHALL BE A MINIMUM OF 3.5" TOTAL THICKNESS, OR SHALL MATCH THE EXISTING PAVEMENT THICKNESS, WHICHEVER IS GREATER.
3. TRENCHES IN EXCESS OF 100 FEET IN LENGTH SHALL HAVE THE JOINT BETWEEN NEW AND OLD PAVEMENT SEALED WITH AN ASPHALT FIBER CRACK SEALER (M3.05.1)

TRENCH PAVEMENT DETAIL

(NOT TO SCALE)

PER TOWN OF CONCORD-PUBLIC WORKS PLAN NO. RS-2

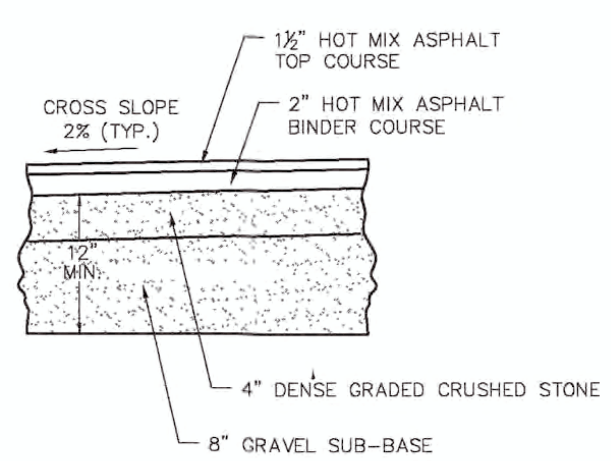

(NOT TO SCALE)

NOTES:
1. MINIMUM PAVEMENT THICKNESS SHOWN IS FOR RESIDENTIAL STREETS, PROPOSED PAVEMENT DESIGNS FOR OTHER ROADWAYS TO BE APPROVED BY TOWN ENGINEER.
2. RECLAIMED ASPHALT PAVEMENT MATERIAL MAY BE SUBSTITUTED FOR DENSE GRADED CRUSHED STONE AND GRAVEL SUB-BASE IF APPROVED BY TOWN ENGINEER. GRADATION SHALL MEET AASHTO A-1-A @ A MIN.

TYPICAL PAVEMENT SECTION

PER TOWN OF CONCORD-PUBLIC WORKS PLAN NO. RS-1

GENERAL NOTES:

1. ALL UNDERGROUND UTILITIES SHOWN HERE WERE COMPILED ACCORDING TO AVAILABLE RECORD PLANS FROM VARIOUS UTILITY COMPANIES AND PUBLIC AGENCIES AND ARE APPROXIMATE ONLY. ACTUAL LOCATIONS MUST BE DETERMINED BEFORE EXCAVATING, BLASTING, INSTALLING, BACK FILLING, GRADING OR PAVEMENT RESTORATION OR REPAIR. ALL UTILITY COMPANIES, PUBLIC AND PRIVATE MUST BE CONTACTED, INCLUDING THOSE IN CONTROL OF UTILITIES. SEE CHAPTER 370, ACTS OF 1963 MASS. WE ASSUME NO RESPONSIBILITY FOR DAMAGES INCURRED AS A RESULT OF UTILITIES OMITTED OR INACCURATELY SHOWN. BEFORE PLANNING FUTURE CONNECTIONS, THE APPROPRIATE UTILITY ENGINEERING DEPT. MUST BE CONSULTED. THE CONTRACTOR SHALL NOTIFY PUBLIC UTILITY COMPANIES AT LEAST 72 HOURS PRIOR TO DIGGING OR EXCAVATING ON PUBLIC OR PRIVATE PROPERTY. DIG SAFE TEL. NO. 1-888-344-7233
2. ALL WATER LINE VALVES, ETC. SHALL MEET ALL SPECIFICATIONS OF THE TOWN OF CONCORD WATER & SEWER DIVISION.
3. ALL STUMPS AND OTHER CONSTRUCTION DEBRIS SHALL BE PROPERLY REMOVED FROM THE SITE.
4. ANY FILL MATERIAL USED SHALL BE FREE OF HAZARDOUS MATERIALS, WASTE, AND CONSTRUCTION DEBRIS.
5. RIP RAP SHALL CONSIST OF HARD DURABLE STONE, ANGULAR IN SHAPE, THAT IS WELL GRADED WITHIN THE 25# TO 125# RANGE. THE RIP RAP SHALL BE PLACED OVER A 12" BASE OF COARSE BANK RUN GRAVEL. RIP RAP SHOWN SCHEMATICALLY AT DRAINAGE OUTFALLS SHALL BE PLACED FOR A 3' WIDTH AND 6' LENGTH UNLESS OTHERWISE SPEC'D.
6. THE LIMITS OF WORK SHALL BE CLEARLY MARKED IN THE FIELD PRIOR TO THE START OF CONSTRUCTION OR SITE CLEARING PER THE STORMWATER POLLUTION PREVENTION PLAN.
7. EXISTING TOPSOIL SHALL BE STRIPPED, STOCKPILED, SCREENED AND SPREAD TO REQUIRED DEPTHS SHOWN ON THE PLAN.
8. CATCHBASIN SUMPS AND STORM WATER BASINS SHALL BE CLEANED FOLLOWING COMPLETION OF CONSTRUCTION AND ANNUALLY THEREAFTER PER O & M PLAN.
9. THE ENTIRE WORK AREA SHALL BE CLEARED OF BUILDINGS TO BE RAZED, PAVEMENT, DEBRIS, BOULDERS, BRUSH, TREES, STUMPS, UNSUITABLE MATERIALS AND LIKE MATERIAL.
10. ALL TOP AND SUBSOIL WITHIN WORK AREA SHALL BE REMOVED AND STOCKPILED ON SITE AS DIRECTED BY THE OWNER. LOAM SHALL BE SCREENED AND STOCKPILED ON-SITE FOR RE-USE IN AREAS OF GENERAL LOAM AND SEED.
11. THE CONTRACTOR SHALL MAINTAIN THE SITE IN A SAFE CONDITION THROUGHOUT THE CONTRACT PERIOD. THE CONTRACTOR SHALL FULLY COMPLY WITH ALL STATE, FEDERAL, AND LOCAL REGULATIONS PERTAINING TO SAFETY.
12. STREET TREES SHALL BE PROVIDED IN ACCORDANCE WITH THE LANDSCAPE PLAN.
13. THE PROPOSED SIGNS SHALL BE DESIGNED AND INSTALLED IN CONFORMANCE WITH THE U.S. DEPARTMENT OF TRANSPORTATION FEDERAL HIGHWAY ADMINISTRATION MANUAL ON UNIFORM TRAFFIC CONTROL DEVICES 2009 EDITION FOR STREETS AND HIGHWAYS OR AS MOST RECENTLY AMENDED. EXISTING SIGNS TO BE RELOCATED WHERE NECESSARY.
14. THE ELECTRICAL POWER DISTRIBUTION SHALL BE INSTALLED IN ACCORDANCE WITH THE SPECIFICATIONS OF THE CONCORD MUNICIPAL LIGHT PLANT IN EFFECT AT THE TIME. ELECTRICAL REQUIREMENTS AND LOCATION TO BE DETERMINED BY OTHERS AND CONFIRMED WITH OWNER.

WILLIAMS & SPARAGES
ENGINEERS | PLANNERS | SURVEYORS
189 NORTH MAIN STREET
SUITE 101
MIDDLETON, MA 01949
PHONE: (978) 539-8088
FAX: (978) 539-8200
WSENGINEERS.COM

Owner:
Faye Erhard Hayes
1450 Main Street
Concord, MA 01742

Applicant:
Symes Development & Permitting, LLC
50 Dodge Street, Suite 202
Beverly, MA 01915

Designed By: RJH
Drawn By: RJH
Reviewed By: RJH
Project Manager: RJH
Job File Number: CONC-0020
Drawing File Folder: MAIN0020

☐ Drawing Issued for Review Only
☒ Drawing Issued for Permit
☐ Drawing Issued for Construction

SEAL
COMMONWEALTH OF MASSACHUSETTS
RICHARD J. HARRINGTON
CIVIL
No. 41298
REGISTERED PROFESSIONAL ENGINEER
6/14/2019

No.	Revision
6	
5	
4	
3	REVISED JUNE 14, 2019
2	REVISED MARCH 28, 2019 (1-Car Units 12, 15, 17, 19, 23 & 36)
1	REVISED MARCH 12, 2019

CONSTRUCTION DETAILS
CENTER & MAIN
1440 MAIN STREET, CONCORD, MA

0' 20' 40' 80'
SCALE: 1"=40'
DECEMBER 6, 2018

DRAWING: 7.1

SHEET 8 OF 12

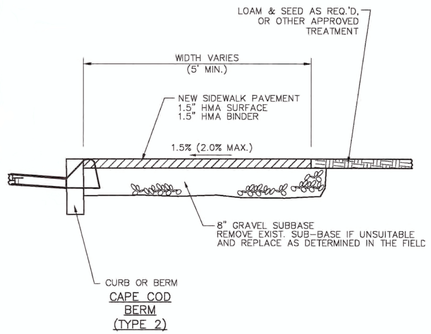

HOT MIX ASPHALT SIDEWALK WITHOUT GRASS STRIP

(NOT TO SCALE)

PER TOWN OF CONCORD–PUBLIC WORKS PLAN NO. RS–7A

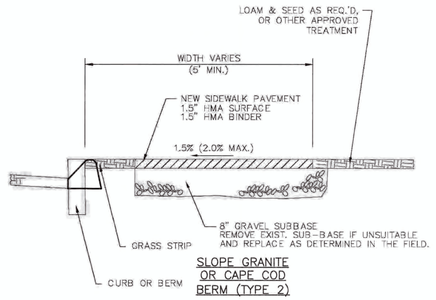

HOT MIX ASPHALT SIDEWALK WITH GRASS STRIP

(NOT TO SCALE)

PER TOWN OF CONCORD–PUBLIC WORKS PLAN NO. RS–7B

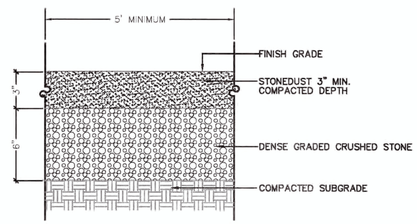

STONE DUST SIDEWALK

(NOT TO SCALE)

PER TOWN OF CONCORD–PUBLIC WORKS PLAN NO. RS–9

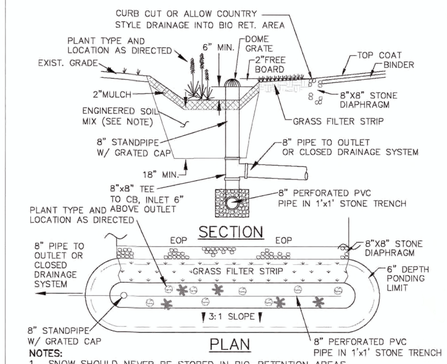

NOTES:

1. SNOW SHOULD NEVER BE STORED IN BIO–RETENTION AREAS.
2. THE SOIL MIX FOR BIO–RETENTION AREAS SHOULD BE A MIX OF SAND COMPOST AND SOIL.
   –40% SAND
   –20 TO 30% TOPSOIL AND,
   –30 TO 40% COMPOST
   AND SHOULD CONFORM TO THE SPECIFICATIONS IN THE STORM–WATER HANDBOOK ('08) VOL. 2 CH. 2 PAGE 26.
3. BOTTOM OF BIO–RETENTION AREA SHALL BE 2 FEET MINIMUM ABOVE GROUNDWATER

BIORETENTION DETAIL

(NOT TO SCALE)

PER TOWN OF CONCORD–PUBLIC WORKS; PLAN NO. DR–3

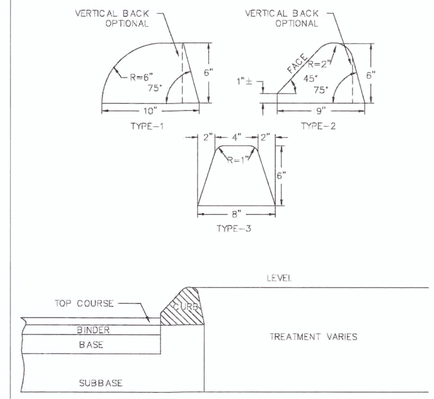

HOT MIX ASPHALT BERM & CURB

(NOT TO SCALE)

PER TOWN OF CONCORD–PUBLIC WORKS PLAN NO. RS–6

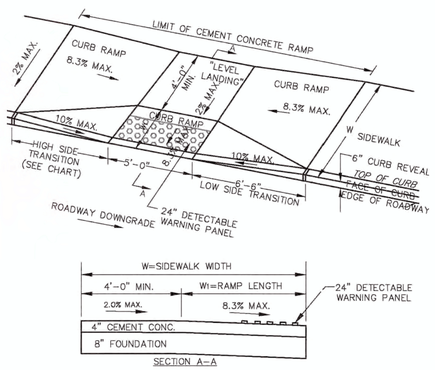

LEGEND

W = SIDEWALK WIDTH (MIN. 5' EXCLUDING CURB)

W1 = PERPENDICULAR RAMP LENGTH

NOTE

- LEVEL LANDING SHALL BE 60"MIN IN DIRECTION OF PEDESTRIAN CROSSING WHEN CONSTRAINED. RECOMMENDED 60"x 60"

CURB RAMP TYPE A (COMBINATION RAMP)

(NOT TO SCALE)

PER TOWN OF CONCORD–PUBLIC WORKS; PLAN NO. RS–10

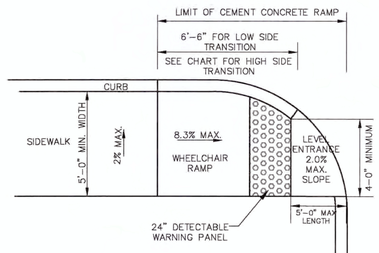

CURB RAMP TYPE B (SINGLE DIRECTION RAMP)

(NOT TO SCALE)

PER TOWN OF CONCORD–PUBLIC WORKS; PLAN NO. RS–11

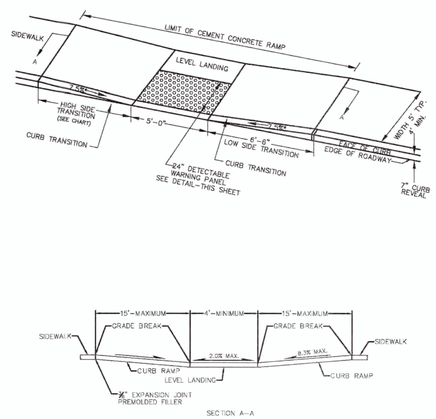

CURB RAMP TYPE C (PARALLEL RAMP)

(NOT TO SCALE)

PER TOWN OF CONCORD–PUBLIC WORKS; PLAN NO. RS–12

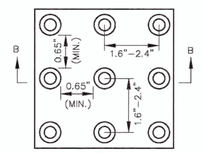

PLAN

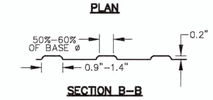

SECTION B–B

NOTE:

1. WARNING SURFACE SHALL CONTRAST VISUALLY WITH ADJACENT WALKING SURFACES.
2. DETECTABLE WARNING PANEL TO BE CAST IRON.
3. EJ CATALOG NO. 00700571 OR APPROVED EQUAL

CURB RAMP NOTES AND TABLE OF TRANSITION LENGTHS

(NOT TO SCALE)

PER TOWN OF CONCORD–PUBLIC WORKS PLAN NO. RS–15

NOTES:

1. ALL RAMPS TO BE CONSTRUCTED OF CEMENT CONCRETE.
2. ALL RAMPS TO HAVE DETECTABLE WARNING PANELS CONFORMING TO RS–13.
3. FIELD LOCATION OF CURB RAMPS TO BE APPROVED BY TOWN ENGINEER PRIOR TO CONSTRUCTION.

TABLE OF TRANSITION LENGTHS

ROADWAY PROFILE GRADE (%)	HIGH SIDE TRANSITION LENGTH
0	6'–6"
>0–1	7'–8"
>1–2	9'–0"
>2–3	11'–0"
>3–4	14'–0"
>4	15'–0" (MAX.)

* BASED ON A DESIGN SLOPE OF 7.5% AND 6" OF CURB REVEAL

DETECTABLE WARNING SURFACES

(NOT TO SCALE)

PER TOWN OF CONCORD–PUBLIC WORKS PLAN NO. RS–16

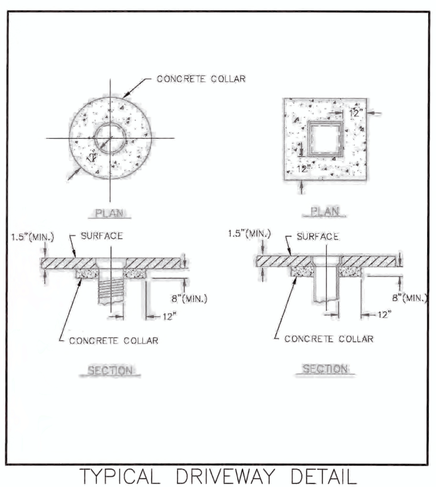

TYPICAL DRIVEWAY DETAIL

(NOT TO SCALE)

PER TOWN OF CONCORD–PUBLIC WORKS PLAN NO. RS–17

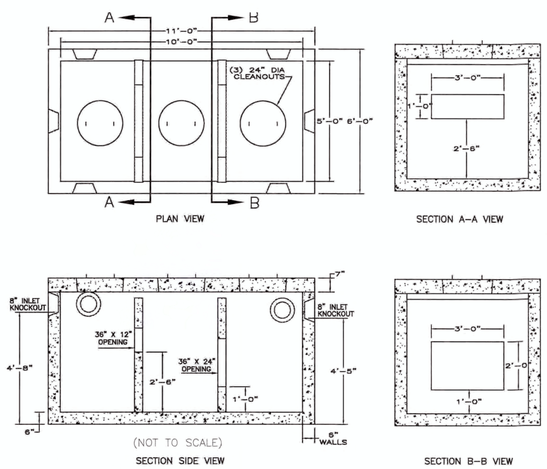

SEDIMENT & OIL SEPARATOR

1500 GALLON (H20 LOADING) – SHEA CONCRETE M1500CSEP OR APPROVED EQUAL

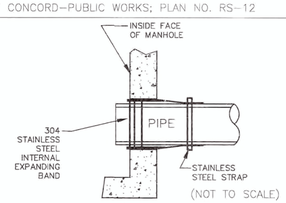

KOR–N–SEAL JOINT SLEEVE (OR EQUAL)

TYPICAL SLEEVE DETAIL

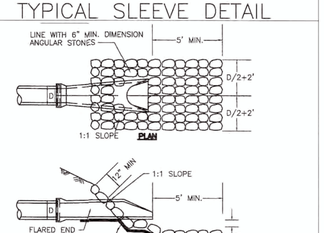

NOTE: ALL PIPE ENDS SHALL BE PROVIDED WITH A FLARED END.

PIPE END DETAIL

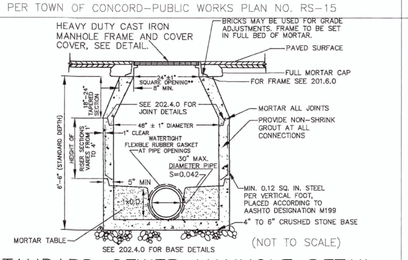

STANDARD SEWER MANHOLE DETAIL

NOTES

1. MANHOLE TO CONFORM TO MASS DOT STANDARD E 202.4.0.
2. FACE OF PIPE FLUSH OR NOT TO PROJECT MORE THAN 4" FROM FACE OF WALL ALONG CENTERLINE OF PIPE.
3. FOR DESCRIPTION, MATERIALS AND CONSTRUCTION METHOD, SEE SPECIFICATIONS.
4. ALL SEWER MANHOLES SHALL BE CONSTRUCTED USING WATERTIGHT CONSTRUCTION MATERIALS AND METHODS.
5. A BITUMINOUS COATING SHALL BE APPLIED TO THE OUTSIDES OF THE MANHOLES.

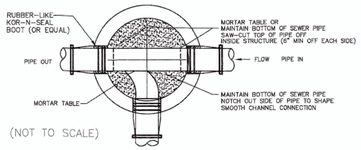

SEWER MANHOLE MORTAR TABLE

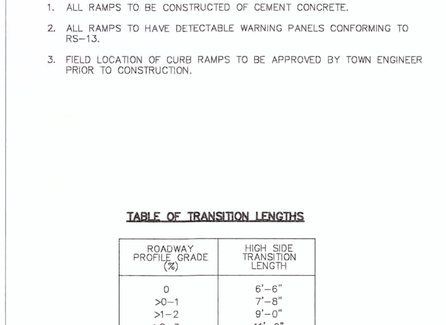

NOTE: ALL PIPES AND FITTINGS SDR35 PVC SEWER PIPE

TYPICAL SEWER CONNECTION

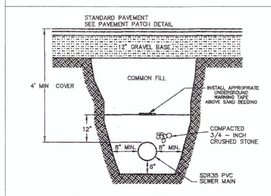

1. ALL SEWER LINES SHALL BE CONSTRUCTED USING WATERTIGHT MATERIALS AND CONSTRUCTION METHODS.
2. ALL WORK AND PAVEMENT REPAIR SHALL BE PERFORMED UNDER THE DIRECTION OF THE TOWN ENGINEER AND SEWER SUPERINTENDENT IN ACCORDANCE WITH TOWN STANDARDS.
3. AN "AS–BUILT" DRAWING OF THE INSTALLATION SHALL BE FURNISHED TO THE TOWN BEFORE SERVICE IS ESTABLISHED.

SEWER TRENCH DETAIL

(NOT TO SCALE)

WILLIAMS & SPARAGES
ENGINEERS • PLANNERS • SURVEYORS
19 NORTH MAIN STREET SUITE 101
MIDDLETON, MA 01949
PHONE (978) 539-9508
FAX (978) 539-8200
WSENGINEERS.COM

Owner:
Faye Erhard Hayes
1450 Main Street
Concord, MA 01742

Applicant:
Symes Development & Permitting, LLC
50 Dodge Street, Suite 202
Beverly, MA 01915

Designed By: RJH
Drawn By: RJH
Reviewed By: RJH
Project Manager: RJH
Job File Number: CONC–0020
Drawing File Folder: MAIN0020

☐ Drawing Issued for Review Only
☒ Drawing Issued for Permit
☐ Drawing Issued for Construction

SEAL

COMMONWEALTH OF MASSACHUSETTS
RICHARD J. HARRINGTON
No. 41298
PROFESSIONAL ENGINEER
6/14/2019

CONSTRUCTION DETAILS CENTER & MAIN

1440 MAIN STREET, CONCORD, MA

6	
5	
4	REVISED JUNE 14, 2019
3	REVISED MARCH 28, 2019 (1–Car limits 12, 15, 17, 19, 23 & 36)
2	REVISED MARCH 12, 2019
1	

0' 20' 40' 80'
SCALE: 1"=40'

DECEMBER 6, 2018

DRAWING: 7.2

SHEET 9 OF 12

ACCEPTABLE FILL MATERIALS: STORMTECH MC-4500 CHAMBER SYSTEMS

MATERIAL LOCATION		DESCRIPTION	AASHTO MATERIAL CLASSIFICATIONS	COMPACTION / DENSITY REQUIREMENT
D	**FINAL FILL:** FILL MATERIAL FOR LAYER 'D' STARTS FROM THE TOP OF THE 'C' LAYER TO THE BOTTOM OF FLEXIBLE PAVEMENT OR UNPAVED FINISHED GRADE ABOVE. NOTE THAT PAVEMENT SUBBASE MAY BE PART OF THE 'D' LAYER	ANY SOIL/ROCK MATERIALS, NATIVE SOILS, OR PER ENGINEER'S PLANS. CHECK PLANS FOR PAVEMENT SUBGRADE REQUIREMENTS.	N/A	PREPARE PER SITE DESIGN ENGINEER'S PLANS. PAVED INSTALLATIONS MAY HAVE STRINGENT MATERIAL AND PREPARATION REQUIREMENTS.
C	**INITIAL FILL:** FILL MATERIAL FOR LAYER 'C' STARTS FROM THE TOP OF THE EMBEDMENT STONE ('B' LAYER) TO 24" (600 mm) ABOVE THE TOP OF THE CHAMBER. NOTE THAT PAVEMENT SUBBASE MAY BE A PART OF THE 'C' LAYER.	GRANULAR WELL-GRADED SOIL/AGGREGATE MIXTURES, <35% FINES OR PROCESSED AGGREGATE. MOST PAVEMENT SUBBASE MATERIALS CAN BE USED IN LIEU OF THIS LAYER.	AASHTO M145[1] A-1, A-2-4, A-3 OR AASHTO M43[1] 3, 357, 4, 467, 5, 56, 57, 6, 67, 68, 7, 78, 8, 89, 9, 10	BEGIN COMPACTIONS AFTER 24" (600 mm) OF MATERIAL OVER THE CHAMBERS IS REACHED. COMPACT ADDITIONAL LAYERS IN 12" (300 mm) MAX LIFTS TO A MIN. 95% PROCTOR DENSITY FOR WELL GRADED MATERIAL AND 95% RELATIVE DENSITY FOR PROCESSED AGGREGATE MATERIALS.
B	**EMBEDMENT STONE:** FILL SURROUNDING THE CHAMBERS FROM THE FOUNDATION STONE ('A' LAYER) TO THE 'C' LAYER ABOVE.	CLEAN, CRUSHED, ANGULAR STONE	AASHTO M43[1] 3, 4	NO COMPACTION REQUIRED.
A	**FOUNDATION STONE:** FILL BELOW CHAMBERS FROM THE SUBGRADE UP TO THE FOOT (BOTTOM) OF THE CHAMBER.	CLEAN, CRUSHED, ANGULAR STONE	AASHTO M43[1] 3, 4	PLATE COMPACT OR ROLL TO ACHIEVE A FLAT SURFACE.[2,3]

PLEASE NOTE:
1. THE LISTED AASHTO DESIGNATIONS ARE FOR GRADATIONS ONLY. THE STONE MUST ALSO BE CLEAN, CRUSHED, ANGULAR. FOR EXAMPLE, A SPECIFICATION FOR #4 STONE WOULD STATE: "CLEAN, CRUSHED, ANGULAR NO. 4 (AASHTO M43) STONE".
2. STORMTECH COMPACTION REQUIREMENTS ARE MET FOR 'A' LOCATION MATERIALS WHEN PLACED AND COMPACTED IN 9" (230 mm) (MAX) LIFTS USING TWO FULL COVERAGES WITH A VIBRATORY COMPACTOR.
3. WHERE INFILTRATION SURFACES MAY BE COMPROMISED BY COMPACTION, FOR STANDARD DESIGN LOAD CONDITIONS, A FLAT SURFACE MAY BE ACHIEVED BY RAKING OR DRAGGING WITHOUT COMPACTION EQUIPMENT. FOR SPECIAL LOAD DESIGNS, CONTACT STORMTECH FOR COMPACTION REQUIREMENTS.

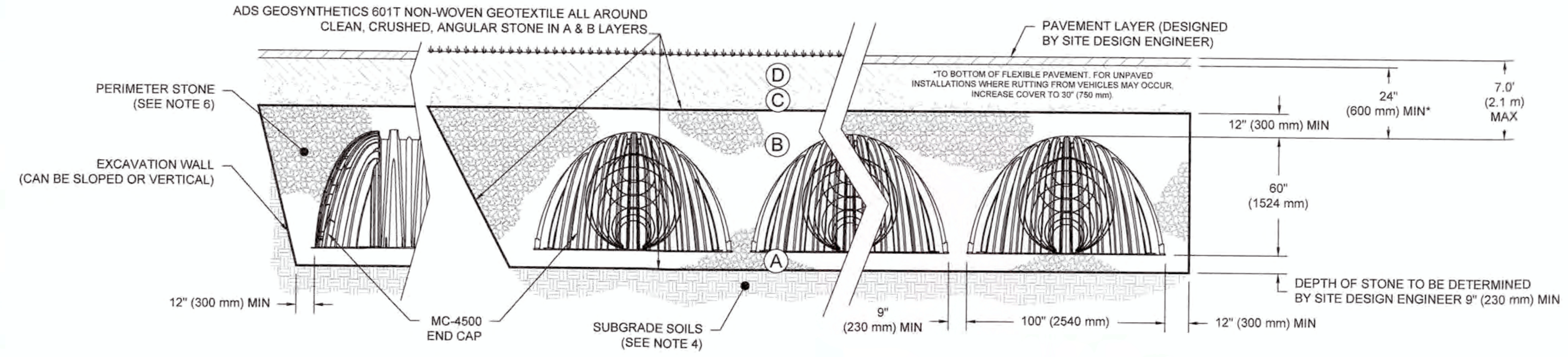

NOTES:

1. MC-4500 CHAMBERS SHALL CONFORM TO THE REQUIREMENTS OF ASTM F2418 "STANDARD SPECIFICATION FOR POLYPROPYLENE (PP) CORRUGATED WALL STORMWATER COLLECTION CHAMBERS".
2. MC-4500 CHAMBERS SHALL BE DESIGNED IN ACCORDANCE WITH ASTM F2787 "STANDARD PRACTICE FOR STRUCTURAL DESIGN OF THERMOPLASTIC CORRUGATED WALL STORMWATER COLLECTION CHAMBERS".
3. "ACCEPTABLE FILL MATERIALS" TABLE ABOVE PROVIDES MATERIAL LOCATIONS, DESCRIPTIONS, GRADATIONS, AND COMPACTION REQUIREMENTS FOR FOUNDATION, EMBEDMENT, AND FILL MATERIALS.
4. THE SITE DESIGN ENGINEER IS RESPONSIBLE FOR ASSESSING THE BEARING RESISTANCE (ALLOWABLE BEARING CAPACITY) OF THE SUBGRADE SOILS AND THE DEPTH OF FOUNDATION STONE WITH CONSIDERATION FOR THE RANGE OF EXPECTED SOIL MOISTURE CONDITIONS.
5. ONCE LAYER 'C' IS PLACED, ANY SOIL/MATERIAL CAN BE PLACED IN LAYER 'D' UP TO THE FINISHED GRADE. MOST PAVEMENT SUBBASE SOILS CAN BE USED TO REPLACE THE MATERIAL REQUIREMENTS OF LAYER 'C' OR 'D' AT THE SITE DESIGN ENGINEER'S DISCRETION.
6. PERIMETER STONE MUST BE EXTENDED HORIZONTALLY TO THE EXCAVATION WALL FOR BOTH VERTICAL AND SLOPED EXCAVATION WALLS.

1 MC-4500 CROSS SECTION DETAIL

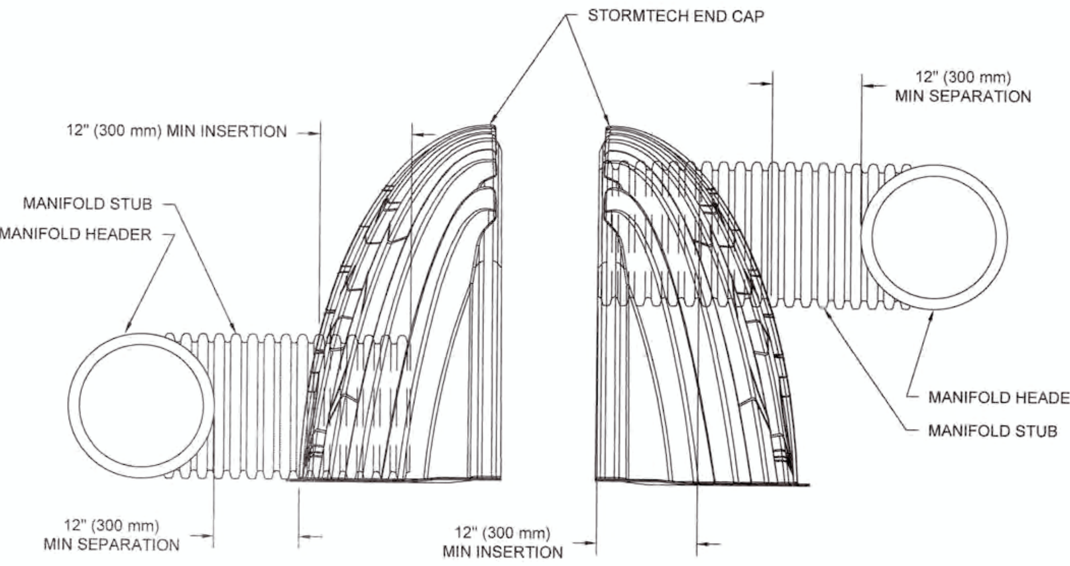

NOTE: MANIFOLD STUB MUST BE LAID HORIZONTAL FOR A PROPER FIT IN END CAP OPENING.

3 MC-SERIES END CAP INSERTION DETAIL

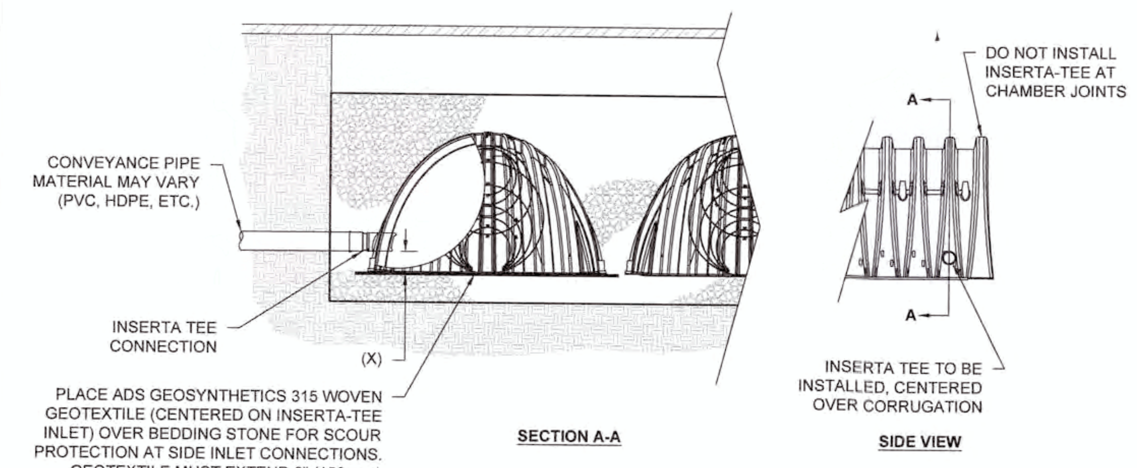

CHAMBER	MAX DIAMETER OF INSERTA TEE	HEIGHT FROM BASE OF CHAMBER (X)
SC-310	6" (150 mm)	4" (100 mm)
SC-740	10" (250 mm)	4" (100 mm)
DC-780	10" (250 mm)	4" (100 mm)
MC-3500	12" (300 mm)	6" (150 mm)
MC-4500	12" (300 mm)	8" (200 mm)
INSERTA TEE FITTINGS AVAILABLE FOR SDR 26, SDR 35, SCH 40 IPS GASKETED & SOLVENT WELD, N-12, HP STORM, C-900 OR DUCTILE IRON		

NOTE:
PART NUMBERS WILL VARY BASED ON INLET PIPE MATERIALS. CONTACT STORMTECH FOR MORE INFORMATION.

4 INSERTA-TEE SIDE INLET DETAIL

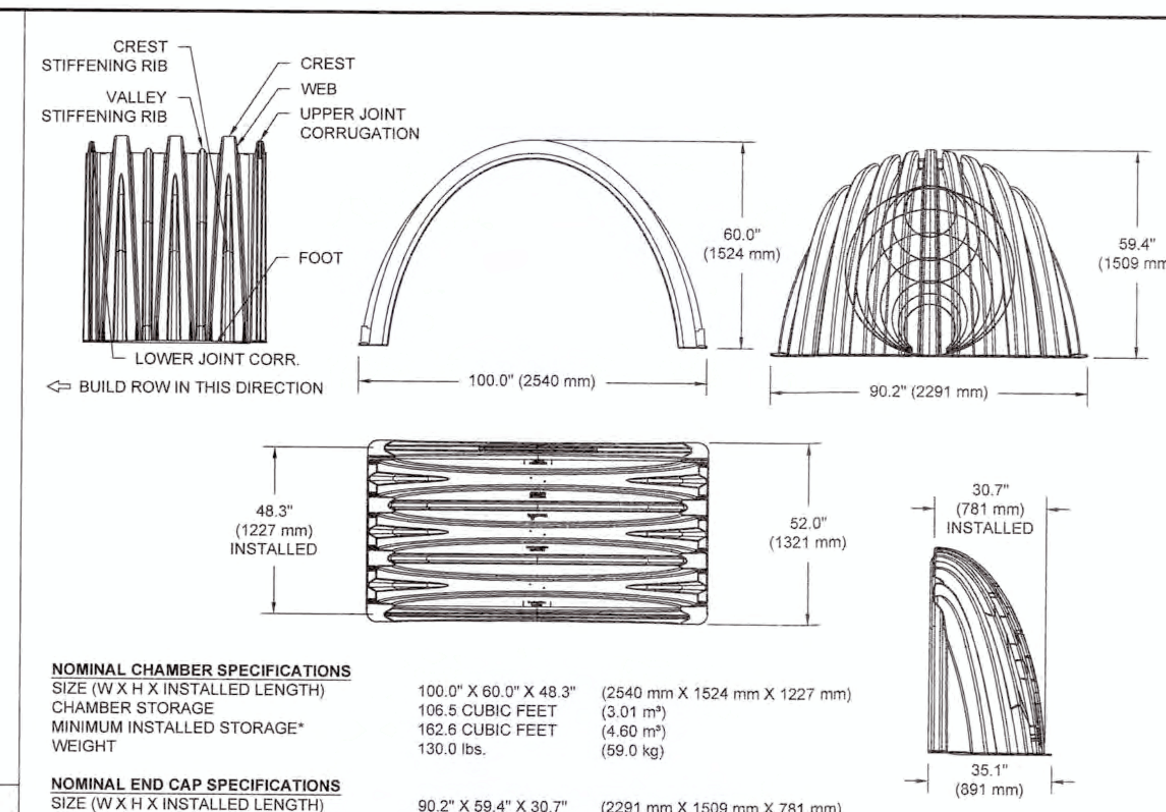

NOMINAL CHAMBER SPECIFICATIONS

SIZE (W X H X INSTALLED LENGTH)	100.0" X 60.0" X 48.3"	(2540 mm X 1524 mm X 1227 mm)
CHAMBER STORAGE	106.5 CUBIC FEET	(3.01 m³)
MINIMUM INSTALLED STORAGE*	162.6 CUBIC FEET	(4.60 m³)
WEIGHT	130.0 lbs.	(59.0 kg)

NOMINAL END CAP SPECIFICATIONS

SIZE (W X H X INSTALLED LENGTH)	90.2" X 59.4" X 30.7"	(2291 mm X 1509 mm X 781 mm)
END CAP STORAGE	35.7 CUBIC FEET	(1.01 m³)
MINIMUM INSTALLED STORAGE*	108.7 CUBIC FEET	(3.08 m³)
WEIGHT	135.0 lbs.	(61.2 kg)

*ASSUMES 12" (305 mm) STONE ABOVE, 9" (229 mm) STONE FOUNDATION AND BETWEEN CHAMBERS, 12" (305 mm) STONE PERIMETER IN FRONT OF END CAPS AND 40% STONE POROSITY.

STUBS AT BOTTOM OF END CAP FOR PART NUMBERS ENDING WITH "B"
STUBS AT TOP OF END CAP FOR PART NUMBERS ENDING WITH "T"
END CAPS WITH A WELDED CROWN PLATE END WITH "C"
END CAPS WITH A PREFABRICATED WELDED STUB END WITH "W"

PART #	STUB	B	C
MC4500REPE06T	6" (150 mm)	42.54" (1.081 m)	---
MC4500REPE06B		---	0.86" (22 mm)
MC4500REPE08T	8" (200 mm)	40.50" (1.029 m)	---
MC4500REPE08B		---	1.01" (26 mm)
MC4500REPE10T	10" (250 mm)	38.37" (975 mm)	---
MC4500REPE10B		---	1.33" (34 mm)
MC4500REPE12T	12" (300 mm)	35.69" (907 mm)	---
MC4500REPE12B		---	1.55" (39 mm)
MC4500REPE15T	15" (375 mm)	32.72" (831 mm)	---
MC4500REPE15B		---	1.70" (43 mm)
MC4500REPE18TC	18" (450 mm)	29.36" (746 mm)	---
MC4500REPE18TW			
MC4500REPE18BC		---	1.97" (50 mm)
MC4500REPE18BW			
MC4500REPE24TC	24" (600 mm)	23.05" (585 mm)	---
MC4500REPE24TW			
MC4500REPE24BC		---	2.26" (57 mm)
MC4500REPE24BW			
MC4500REPE30BC	30" (750 mm)	---	2.95" (75 mm)
MC4500REPE36BC	36" (900 mm)	---	3.25" (83 mm)
MC4500REPE42BC	42" (1050 mm)	---	3.55" (90 mm)

NOTE: ALL DIMENSIONS ARE NOMINAL

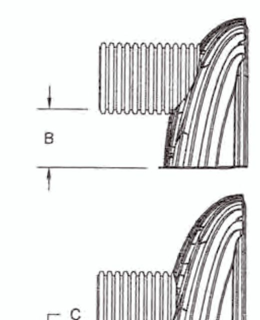

CUSTOM PRECORED INVERTS ARE AVAILABLE UPON REQUEST. INVENTORIED MANIFOLDS INCLUDE 12-24" (300-600 mm) SIZE ON SIZE AND 15-48" (375-1200 mm) ECCENTRIC MANIFOLDS. CUSTOM INVERT LOCATIONS ON THE MC-4500 END CAP CUT IN THE FIELD ARE NOT RECOMMENDED FOR PIPE SIZES GREATER THAN 10" (250 mm). THE INVERT LOCATION IN COLUMN 'B' ARE THE HIGHEST POSSIBLE FOR THE PIPE SIZE.

5 MC-4500 TECHNICAL SPECIFICATIONS

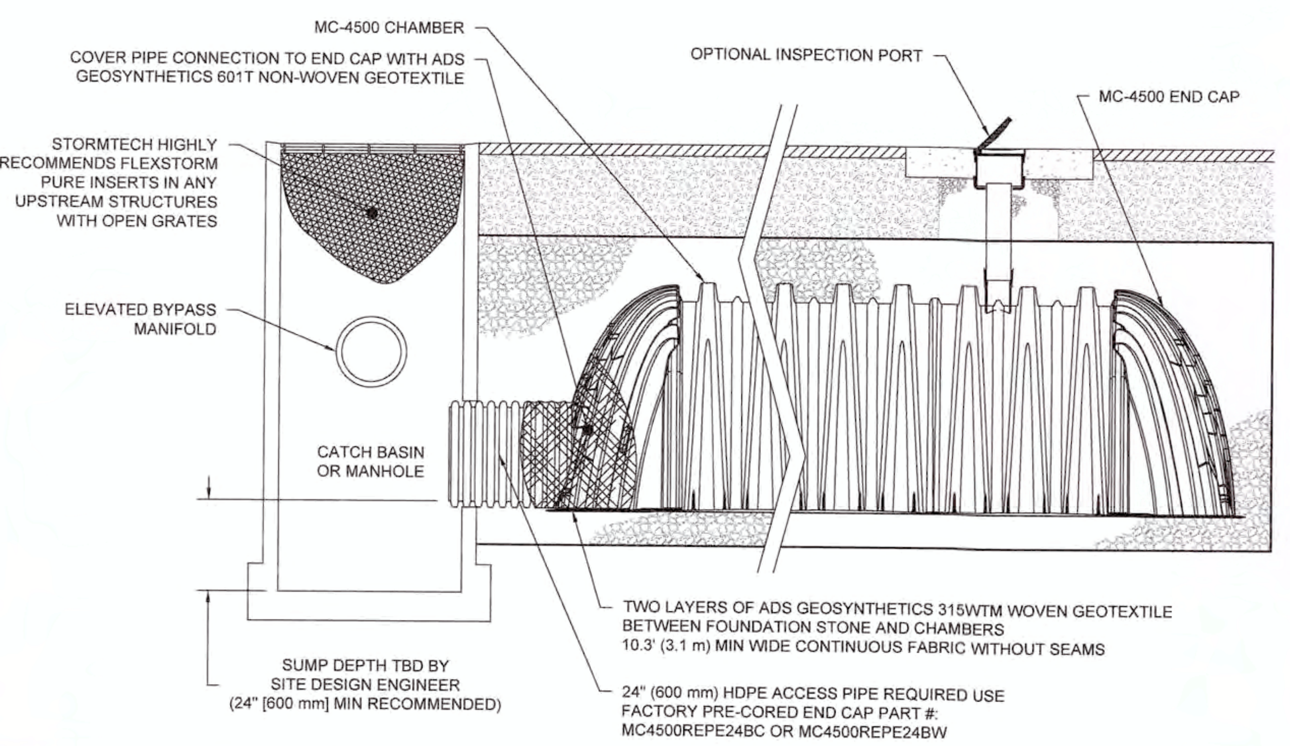

INSPECTION & MAINTENANCE

STEP 1) INSPECT ISOLATOR ROW FOR SEDIMENT
- A. INSPECTION PORTS (IF PRESENT)
  - A.1. REMOVE/OPEN LID ON NYLOPLAST INLINE DRAIN
  - A.2. REMOVE AND CLEAN FLEXSTORM FILTER IF INSTALLED
  - A.3. USING A FLASHLIGHT AND STADIA ROD, MEASURE DEPTH OF SEDIMENT AND RECORD ON MAINTENANCE LOG
  - A.4. LOWER A CAMERA INTO ISOLATOR ROW FOR VISUAL INSPECTION OF SEDIMENT LEVELS (OPTIONAL)
  - A.5. IF SEDIMENT IS AT, OR ABOVE, 3" (80 mm) PROCEED TO STEP 2. IF NOT, PROCEED TO STEP 3.
- B. ALL ISOLATOR ROWS
  - B.1. REMOVE COVER FROM STRUCTURE AT UPSTREAM END OF ISOLATOR ROW
  - B.2. USING A FLASHLIGHT, INSPECT DOWN THE ISOLATOR ROW THROUGH OUTLET PIPE
    - i) MIRRORS ON POLES OR CAMERAS MAY BE USED TO AVOID A CONFINED SPACE ENTRY
    - ii) FOLLOW OSHA REGULATIONS FOR CONFINED SPACE ENTRY IF ENTERING MANHOLE
  - B.3. IF SEDIMENT IS AT, OR ABOVE, 3" (80 mm) PROCEED TO STEP 2. IF NOT, PROCEED TO STEP 3.

STEP 2) CLEAN OUT ISOLATOR ROW USING THE JETVAC PROCESS
- A. A FIXED CULVERT CLEANING NOZZLE WITH REAR FACING SPREAD OF 45" (1.1 m) OR MORE IS PREFERRED
- B. APPLY MULTIPLE PASSES OF JETVAC UNTIL BACKFLUSH WATER IS CLEAN
- C. VACUUM STRUCTURE SUMP AS REQUIRED

STEP 3) REPLACE ALL COVERS, GRATES, FILTERS, AND LIDS; RECORD OBSERVATIONS AND ACTIONS.

STEP 4) INSPECT AND CLEAN BASINS AND MANHOLES UPSTREAM OF THE STORMTECH SYSTEM.

NOTES

1. INSPECT EVERY 6 MONTHS DURING THE FIRST YEAR OF OPERATION. ADJUST THE INSPECTION INTERVAL BASED ON PREVIOUS OBSERVATIONS OF SEDIMENT ACCUMULATION AND HIGH WATER ELEVATIONS.
2. CONDUCT JETTING AND VACTORING ANNUALLY OR WHEN INSPECTION SHOWS THAT MAINTENANCE IS NECESSARY.

2 MC-4500 ISOLATOR ROW DETAIL

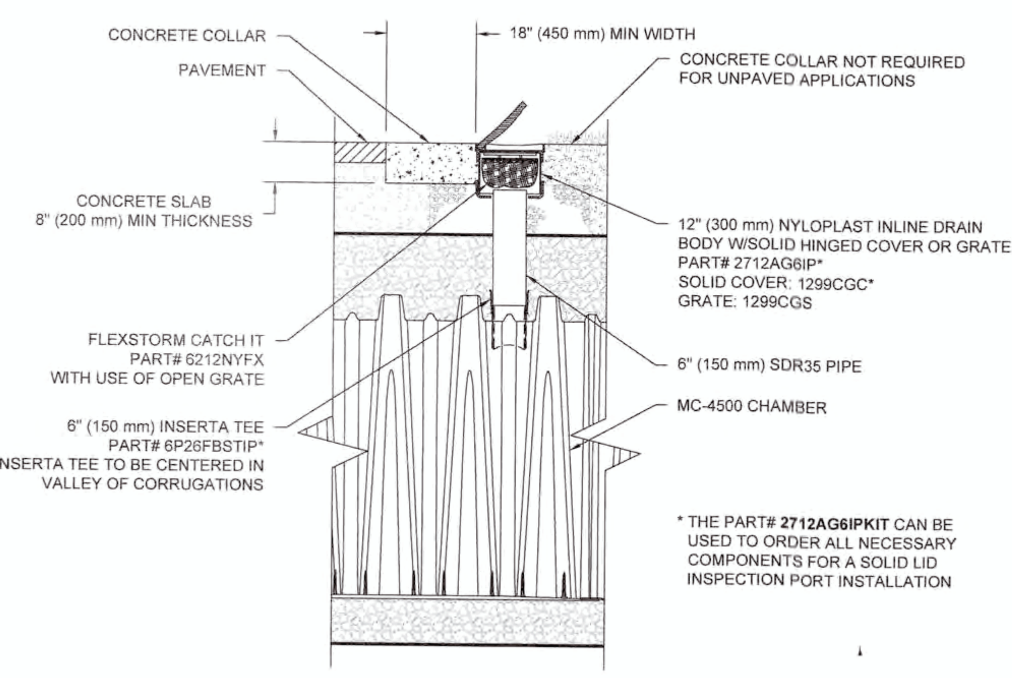

* THE PART# **2712AG6IPKIT** CAN BE USED TO ORDER ALL NECESSARY COMPONENTS FOR A SOLID LID INSPECTION PORT INSTALLATION

6 MC-4500 6" (150 mm) INSPECTION PORT DETAIL

NOTES FOR INSTALLATION OF MC-4500 CHAMBER SYSTEM

1. STORMTECH MC-4500 CHAMBERS SHALL NOT BE INSTALLED UNTIL THE MANUFACTURER'S REPRESENTATIVE HAS COMPLETED A PRE-CONSTRUCTION MEETING WITH THE INSTALLERS.
2. STORMTECH MC-4500 CHAMBERS SHALL BE INSTALLED IN ACCORDANCE WITH THE "STORMTECH MC-3500/MC-4500 CONSTRUCTION GUIDE".
3. CHAMBERS ARE NOT TO BE BACKFILLED WITH A DOZER OR EXCAVATOR SITUATED OVER THE CHAMBERS. STORMTECH RECOMMENDS 3 BACKFILL METHODS:
   - STONESHOOTER LOCATED OFF THE CHAMBER BED.
   - BACKFILL AS ROWS ARE BUILT USING AN EXCAVATOR ON THE FOUNDATION STONE OR SUBGRADE.
   - BACKFILL FROM OUTSIDE THE EXCAVATION USING A LONG BOOM HOE OR EXCAVATOR.
4. THE FOUNDATION STONE SHALL BE LEVELED AND COMPACTED PRIOR TO PLACING CHAMBERS.
5. JOINTS BETWEEN CHAMBERS SHALL BE PROPERLY SEATED PRIOR TO PLACING STONE.
6. MAINTAIN MINIMUM 9" (230 mm) SPACING BETWEEN THE CHAMBER ROWS.
7. INLET AND OUTLET MANIFOLDS MUST BE INSERTED A MINIMUM OF 12" (300 mm) INTO CHAMBER END CAPS.
8. EMBEDMENT STONE SURROUNDING CHAMBERS MUST BE A CLEAN, CRUSHED, ANGULAR STONE MEETING THE AASHTO M43 DESIGNATION OF #3 OR #4.
9. STONE SHALL BE BROUGHT UP EVENLY AROUND CHAMBERS SO AS NOT TO DISTORT THE CHAMBER SHAPE. STONE DEPTHS SHOULD NEVER DIFFER BY MORE THAN 12" (300 mm) BETWEEN ADJACENT CHAMBER ROWS.
10. STONE MUST BE PLACED ON THE TOP CENTER OF THE CHAMBER TO ANCHOR THE CHAMBERS IN PLACE AND PRESERVE ROW SPACING.
11. THE CONTRACTOR MUST REPORT ANY DISCREPANCIES WITH CHAMBER FOUNDATION MATERIAL BEARING CAPACITIES TO THE SITE DESIGN ENGINEER.
12. ADS RECOMMENDS THE USE OF "FLEXSTORM CATCH IT" INSERTS DURING CONSTRUCTION FOR ALL INLETS TO PROTECT THE SUBSURFACE STORMWATER MANAGEMENT SYSTEM FROM CONSTRUCTION SITE RUNOFF.

7 MC-4500 INSTALLATION NOTES

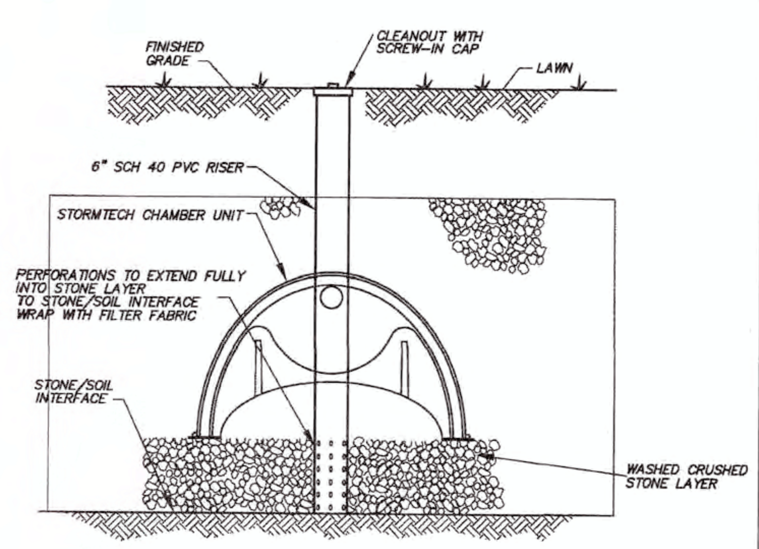

ROOF DRYWELL
INSPECTION PORT DETAIL
(NOT TO SCALE)

DOWNSPOUT DETAIL
(NOT TO SCALE)

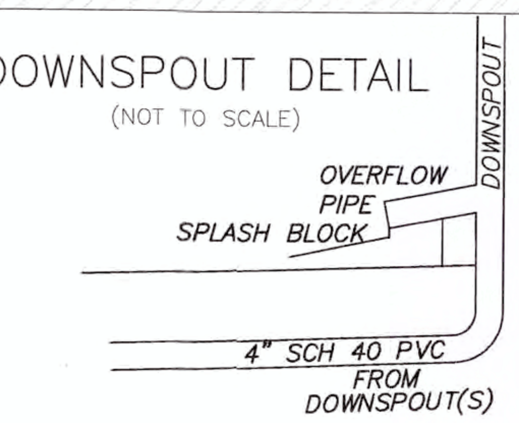

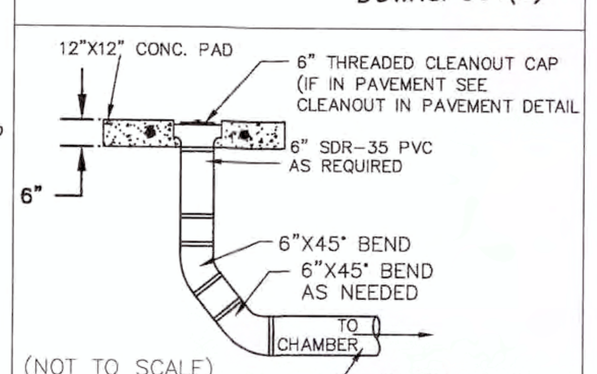

(NOT TO SCALE)
CLEANOUT DETAIL

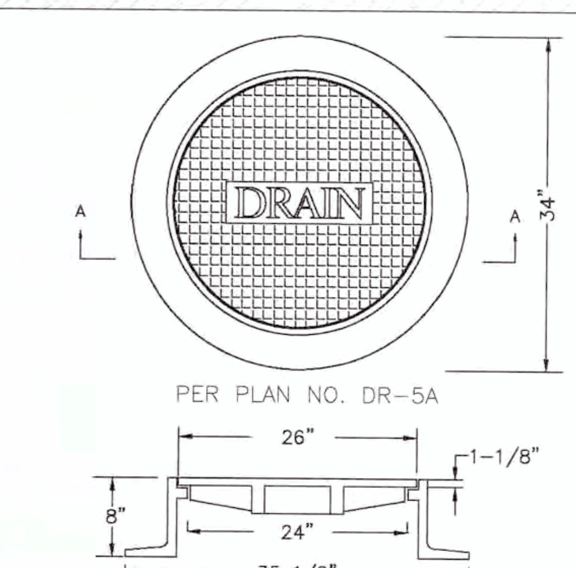

PER PLAN NO. DR-5A

SECTION A-A
(NOT TO SCALE)

NOTE:
FRAME EJ CATALOG NO. 0MA211000038
COVER EJ CATALOG NO. 0MA211000041
OR APPROVED EQUAL.

DRAIN MANHOLE
COVER AND FRAME

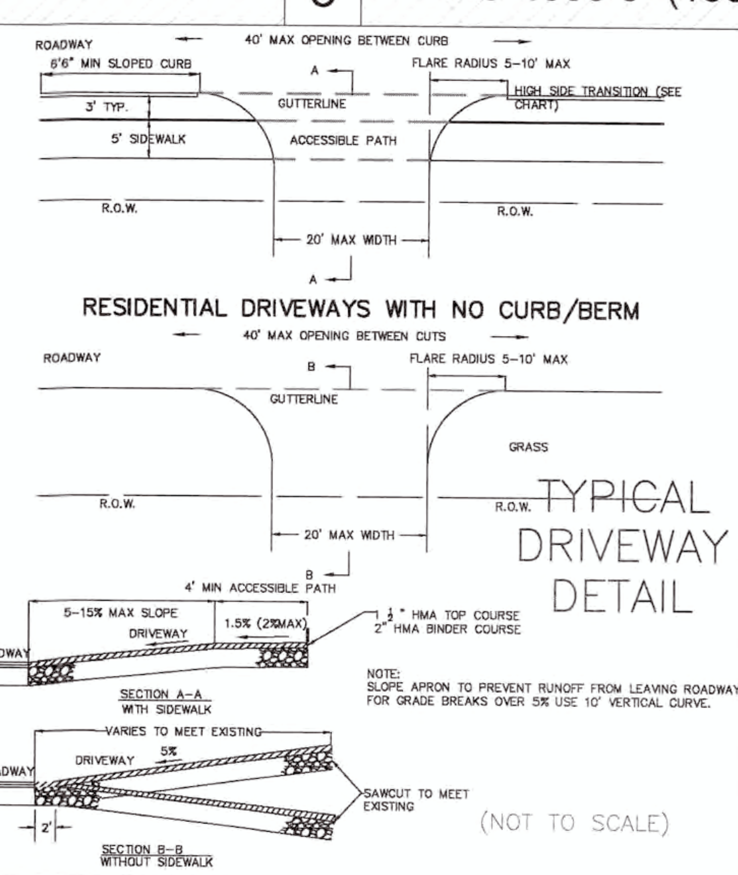

TYPICAL
DRIVEWAY
DETAIL
(NOT TO SCALE)

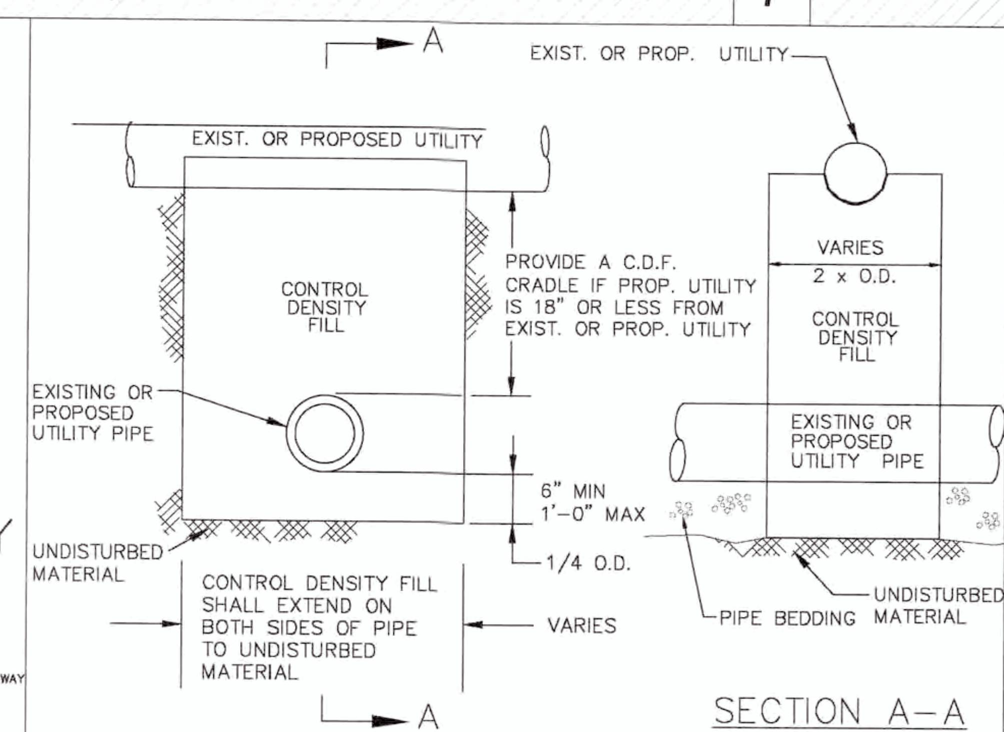

UTILITY SUPPORT DETAIL
(NOT TO SCALE)
PER TOWN OF CONCORD-PUBLIC WORKS PLAN NO. DR-9

StormTech® Detention • Retention • Water Quality
70 INWOOD ROAD, SUITE 3 | ROCKY HILL | CT | 06067
860-529-8188 | 888-892-2694 | WWW.STORMTECH.COM

ADS® ADVANCED DRAINAGE SYSTEMS, INC.
4640 TRUEMAN BLVD
HILLIARD, OH 43026

WILLIAMS & SPARAGES
ENGINEERS | PLANNERS | SURVEYORS
189 NORTH MAIN STREET
SUITE 101
MIDDLETON, MA 01949
PHONE: (978) 539-8088
FAX: (978) 539-8200
WSENGINEERS.COM

Owner:
Faye Erhard Hayes
1450 Main Street
Concord, MA 01742

Applicant:
Symes Development & Permitting, LLC
50 Dodge Street, Suite 202
Beverly, MA 01915

Designed By: RJH
Drawn By: RJH
Reviewed By: RJH
Project Manager: RJH
Job File Number: CONC-0020
Drawing File Folder: MAIN0020

- [ ] Drawing Issued for Review Only
- [x] Drawing Issued for Permit
- [ ] Drawing Issued for Construction

SEAL
COMMONWEALTH OF MASSACHUSETTS
RICHARD J. HARRINGTON
CIVIL
No. 41298
REGISTERED PROFESSIONAL ENGINEER
6/14/2019

No.	Revision
6	
5	
4	
3	REVISED JUNE 14, 2019
2	REVISED MARCH 28, 2019 (1-Car Units 12, 15, 17, 19, 23 & 36)
1	REVISED MARCH 12, 2019

CONSTRUCTION DETAILS
CENTER & MAIN
1440 MAIN STREET, CONCORD, MA

0' 20' 40' 80'
SCALE: 1"=40'
DECEMBER 6, 2018

DRAWING: 7.3
SHEET 10 OF 12

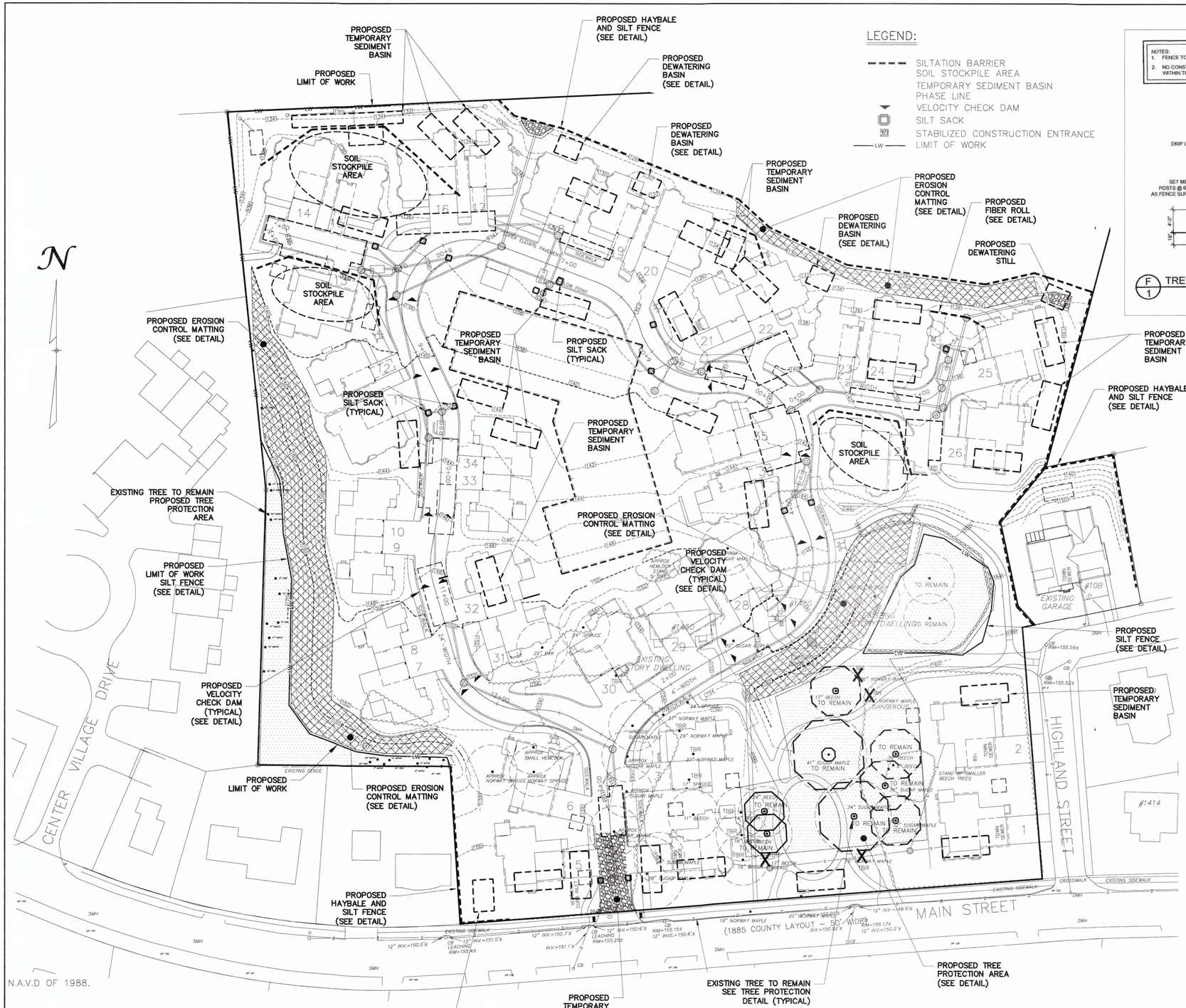

LEGEND:

- SILTATION BARRIER
- SOIL STOCKPILE AREA
- TEMPORARY SEDIMENT BASIN
- PHASE LINE
- VELOCITY CHECK DAM
- SILT SACK
- STABILIZED CONSTRUCTION ENTRANCE
- LW — LIMIT OF WORK

NOTES:
1. FENCE TO BE MAINTAINED AND REPAIRED AS NEEDED DURING CONSTRUCTION.
2. NO CONSTRUCTION TRAFFIC, GRADING, STORAGE OR WASTE DISPOSAL ALLOWED WITHIN THE FENCED AREA AROUND TREES.

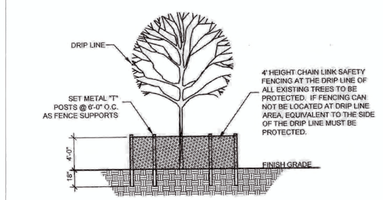

F 1 TREE PROTECTION DETAIL

NOT TO SCALE

TREE PROTECTION NOTES

1. EXISTING TREES SHOWN TO REMAIN ARE TO BE PROTECTED DURING CONSTRUCTION. CHAINLINK FENCING (MIN. 4'-0" HEIGHT) SHALL BE INSTALLED AT THE DRIP LINE OF ALL TREES OR TREE GROUPS TO REMAIN. PARKING OF VEHICLES OR PERFORMING WORK WITHIN THESE AREAS OTHER THAN SHOWN ON THE PLAN, WILL NOT BE ALLOWED. THE TREE PROTECTION SHALL REMAIN DURING CONSTRUCTION. OTHER TREE PROTECTION MEASURES SHALL BE IN ACCORDANCE WITH THE CITY'S STANDARDS AND ORDINANCES.
2. DISPOSAL OF ANY WASTE MATERIAL SUCH AS, BUT NOT LIMITED TO, PAINT, ASPHALT, OIL SOLVENTS, CONCRETE, MORTAR, ETC. WITHIN THE CANOPY AREA OF THE EXISTING TREES SHALL NOT BE ALLOWED.
3. NO ATTACHMENTS OR WIRES OF ANY KIND, OTHER THAN THOSE OF A PROTECTIVE NATURE, SHALL BE ATTACHED TO ANY TREE.
4. NO FILL OR EXCAVATION OF ANY NATURE SHALL OCCUR WITHIN THE DRIP LINE OF A TREE TO BE PRESERVED, UNLESS THERE IS A SPECIFIED WELL OR RETAINING WALL SHOWN ON THE GRADING PLAN.
5. NO MATERIALS SHALL BE STORED WITHIN THE DRIPLINE AREA OF A TREE TO BE PRESERVED.

TOWN OF CONCORD STANDARD EROSION AND SEDIMENTATION NOTES

PER TOWN OF CONCORD–PUBLIC WORKS; DESIGN AND CONSTRUCTION STANDARDS; PLAN NO. EC–1 & EC–2

GENERAL

THIS PLAN PROPOSES EROSION CONTROL MEASURES TO ADEQUATELY CONTROL ACCELERATED SEDIMENTATION AND REDUCE THE DANGER FROM STORM WATER RUNOFF AT THE SITE. THE RUNOFF SHALL BE CONTROLLED BY THE INTERCEPTION, DIVERSION, AND SAFE DISPOSAL OF PRECIPITATION. RUNOFF SHALL ALSO BE CONTROLLED BY STAGING CONSTRUCTION ACTIVITY AND PRESERVING NATURAL VEGETATION WHEREVER POSSIBLE.

EXISTING VEGETATION SHALL BE PROTECTED AND ONLY THAT CLEARING AND GRUBBING ABSOLUTELY NECESSARY TO THE PROPOSED CONSTRUCTION SHALL BE PERFORMED. ALL DISTURBED AREAS SHALL BE RESTORED TO THEIR ORIGINAL CONDITION AND CONTOUR, UNLESS OTHERWISE INDICATED ON THE PLANS. THE CONTRACTOR SHALL TAKE SPECIAL CARE WITH HIS CONSTRUCTION METHODS AND SHALL COMPLY WITH THE FOLLOWING GUIDELINES.

SEDIMENTATION CONTROL

ALL AREAS SHALL BE PROTECTED FORM SEDIMENTATION DURING AND AFTER CONSTRUCTION, PARTICULARLY THE STORAGE OF EXCAVATED OR STOCKPILED MATERIAL. THE CONTRACTOR SHALL CAREFULLY STRIP ALL TOPSOIL, LOAM, OR ORGANIC MATTER PRIOR TO THE TRENCHING OR OTHER OPERATIONS AND SHALL STORE THEM SEPARATELY FROM ALL OTHER MATERIALS DURING EXCAVATION. EACH STOCKPILE MUST BE ADEQUATELY RINGED WITH SEDIMENT CONTROL MATERIAL (i.e. HAY BALES AND/OR FILTER FIBER ROLL).

DEBRIS AND OTHER WASTE RESULTING FROM EQUIPMENT MAINTENANCE AND CONSTRUCTION WILL NOT BE DISCARDED ON SITE.

EROSION AND SEDIMENTATION CONTROL PLAN

SEDIMENTATION CONTROL SYSTEM – THE SEDIMENTATION CONTROL SYSTEM SHALL CONSIST OF FILTER FABRIC BARRIER FENCE & HAYBALES. THE SEDIMENTATION CONTROL SYSTEM SHALL BE INSTALLED IMMEDIATELY AFTER A CUT SLOPE HAS BEEN GRADED, BEFORE A FILL SLOPE HAS BEEN CREATED AND AS INDICATED ON THE PLANS. THE SYSTEM DESIGNED TO INTERCEPT SILT AND SEDIMENT BEFORE IT REACHES THE WETLANDS OR WATERCOURSES. DEPOSITS OF SEDIMENT AND SILT ARE TO BE PERIODICALLY REMOVED FOR THE UPSTREAM SIDE OF THE FENCE. THIS MATERIAL IS TO BE SPREAD AND STABILIZED IN AREAS NOT SUBJECT TO EROSION, OR IN AREAS WHICH ARE NOT TO BE PAVED OR BUILT ON. THE SEDIMENTATION CONTROL SYSTEM IS TO BE REPLACED AS NECESSARY TO PROVIDE PROPER FILTERING ACTION. THE SYSTEM IS TO REMAIN IN PLACE AND BE MAINTAINED TO INSURE EFFICIENT SILTATION CONTROL UNTIL ALL AREAS ABOVE THE SYSTEM ARE STABILIZED AND VEGETATION HAS BEEN ESTABLISHED.

STACKED HAY BALES – HAY OR STRAW BALES USED FOR EROSION CONTROL SHALL BE STACKED AT CATCH BASINS WHERE SEDIMENT MAY ENTER THE CATCH BASIN OR AS DIRECTED BY THE RESIDENT ENGINEER. DEPOSITS OF SEDIMENT AND SILT ARE TO BE PERIODICALLY REMOVED FROM THE UPSTREAM SIDE OF THE EROSION CHECKS. THIS MATERIAL IS TO BE SPREAD AND STABILIZED IN AREAS NOT SUBJECT TO EROSION, OR IN AREAS WHICH ARE NOT TO BE PAVED OR BUILT ON. HAY OR STRAW BALES ARE TO BE REPLACED AS NECESSARY TO PROVIDE PROPER FILTERING ACTION. THE SYSTEM IS TO REMAIN IN PLACE AND BE MAINTAINED TO INSURE EFFICIENT SILTATION CONTROL UNTIL ALL AREAS ABOVE THE EROSION CHECKS ARE STABILIZED AND VEGETATION HAS BEEN ESTABLISHED.

EROSION CONTROL MATTING – MATTING SHALL BE USED FOR EROSION CONTROL ON SLOPES GREATER THAN 3:1. SOIL ON SLOPES SHALL BE PREPARED BEFORE INSTALLING MATTING, INCLUDING ANY NECESSARY APPLICATION OF LIME, FERTILIZER AND SEED. THE SYSTEM IS TO REMAIN IN PLACE AND BE MAINTAINED TO

EROSION AND SEDIMENT CONTROL MAINTENANCE PROCEDURES

DURING CONSTRUCTION, AS SMALL AN AREA OF SOIL AS POSSIBLE SHOULD BE EXPOSED OR AS SHORT A TIME AS POSSIBLE. AFTER CONSTRUCTION, GRADE, RESPREAD TOPSOIL, AND STABILIZE SOIL BY SEEDING AND MULCHING AS TO PREVENT EROSION.

ALL SEDIMENTATION AND EROSION CONTROL DEVICES SHALL BE INSPECTED DURING CONSTRUCTION ON A DAILY BASIS AND FOLLOWING ALL STORMS BY THE RESIDENT ENGINEER. THE CONTRACTOR SHALL MAINTAIN AND MAKE REPAIRS AND REMOVE SEDIMENT AS REQUESTED BY THE RESIDENT ENGINEER. THIS WORK SHAL BE PERFORMED WITHIN 24 HOURS OF REQUEST.

THE CONTRACTOR SHALL CLEAN SEDIMENT AND DEBRIS FROM ALL DRAINAGE STRUCTURES, AND PIPES AT THE COMPLETION ON CONSTRUCTION, THE CONTRACTOR SHALL REPAIR ALL ERODED AREAS AND ENSURE A GOOD STAND OF TURF IS ESTABLISHED THROUGHOUT. THE CONTRACTOR SHALL REPAIR ALL ERODED OR DISPLACED RIPRAP, AND CLEAN SEDIMENT COVERED STONES.

CONSTRUCTION PROCEDURES:

1. HAY BALES SHALL BE PLACED AROUND EXISTING CATCH BASINS AND DROP INLETS TO PREVENT SEDIMENTATION AND OTHER DEBRIS FROM ACCUMULATING ON THE GRATE OR IN THE SUMP. HAY BALES SHOULD BE KEPT CLEAN AND FREE OF DEBRIS TO FACILITATE FLOW.

2. EACH BALE SHALL BE EMBEDDED IN THE SOIL A MINIMUM OF 4 INCHES, AND PLACED SO THE BINDINGS ARE HORIZONTAL.

3. BALES SHALL BE SECURELY ANCHORED IN PLACE BY EITHER TWO STAKES OR OR REBARS DRIVEN THROUGH THE BALE. THE FIRST STAKE SHALL BE DRIVEN TOWARD THE PREVIOUSLY LAID BALE AT AN ANGLE TO FORCE THE BALES TOGETHER. STAKES SHALL BE DRIVEN FLUSH WITH THE BALE.

4. INSPECTION SHALL BE FREQUENT AND REPAIR REPLACEMENT SHALL BE MADE PROMPTLY AS NEEDED.

5. BALES SHALL BE REMOVED WHEN THEY HAVE SERVED THEIR USEFULNESS SO AS NOT TO BLOCK OR IMPEDE STORM FLOW OR DRAINAGE.

LONG TERM POLLUTION PREVENTION PLAN

1. THERE SHALL BE NO ILLICIT DISCHARGES TO ANY PART OF THE STORM DRAIN SYSTEM.

2. ALL DRAIN PIPE SHALL BE HDPE, UNLESS OTHERWISE NOTED.

THE IMPLEMENTATION, INSPECTION, AND REPAIR OF THE EROSION CONTROLS IS THE RESPONSIBILITY OF THE SITE CONTRACTOR DURING CONSTRUCTION.

THE INSPECTION AND OPERATION OF THE STORM WATER MANAGEMENT SYSTEM UPON COMPLETION OF CONSTRUCTION IS THE RESPONSIBILITY OF:

DURING CONSTRUCTION: SYMES DEVELOPMENT & PERMITTING, LLC

PARTIES RESPONSIBLE FOR LONG TERM OPERATION/MAINTENANCE:

CONDOMINIUM ASSOCIATION

WILLIAMS & SPARAGES
ENGINEERS • PLANNERS • SURVEYORS
1250 SOUTH MAIN STREET
SUITE 101
MIDDLETON, MA 01949
PHONE: (978) 539-9988
FAX: (978) 539-8200
WSENGINEERS.COM

Owner:
Faye Erhard Hayes
1450 Main Street
Concord, MA 01742

Applicant:
Symes Development & Permitting, LLC
50 Dodge Street, Suite 202
Beverly, MA 01915

Designed By: RJH
Drawn By: RJH
Reviewed By: RJH
Project Manager: RJH
Job File Number: CONC-0020
Drawing File Folder: MAIN0020

☐ Drawing Issued for Review Only
☒ Drawing Issued for Permit
☐ Drawing Issued for Construction

SEAL

COMMONWEALTH OF MASSACHUSETTS
RICHARD J. HARRINGTON
No. 41288
PROFESSIONAL ENGINEER
6/14/2019

6	
5	
4	
3	REVISED JUNE 14, 2019
2	REVISED MARCH 28, 2019 (1-Car Units 12, 15, 17, 19, 23 & 36)
1	REVISED MARCH 12, 2019

STORMWATER POLLUTION PREVENTION PLAN CENTER & MAIN

1440 MAIN STREET, CONCORD, MA

0' 20' 40' 80'
SCALE: 1"=40'

DRAWING: 8.1

SHEET 11 OF 12

DECEMBER 6, 2018

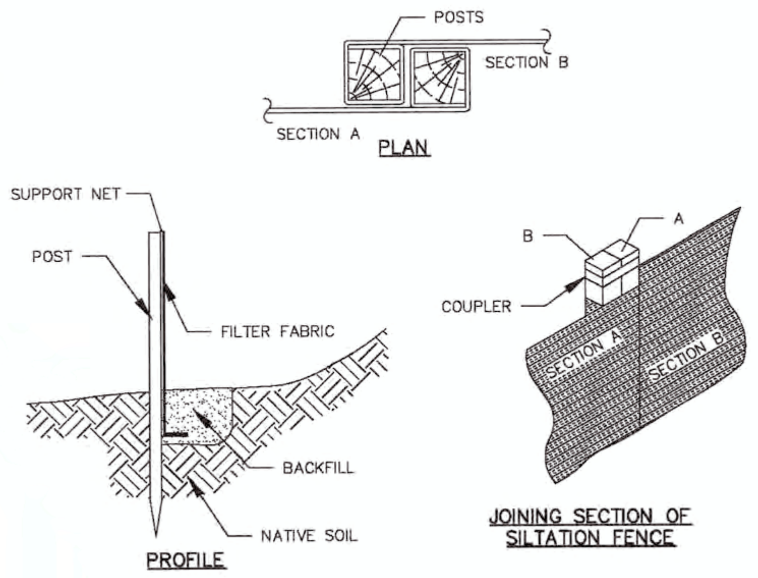

CONSTRUCTION NOTES

1. WOVEN WIRE FENCE TO BE FASTENED SECURELY TO FENCE POST WITH WIRE TIES OR STAPLES.
2. FILTER FABRIC TO BE FASTENED SECURELY TO WOVEN WIRE FENCE WITH TIES SPACED EVERY 24" AT TOP AND MID SECTION.
3. WHEN TWO SECTIONS OF FILTER FABRIC ADJOIN EACH OTHER, THEY SHALL BE OVERLAPPED BY 6 INCHES AND FOLDED.
4. MAINTENANCE SHALL BE PERFORMED AS NEEDED AND MATERIAL REMOVED WHEN "BULGES" DEVELOP IN THE SILT FENCE.
5. INSPECTION SHALL BE FREQUENT AND REPAIR REPLACEMENT SHALL BE MADE PROMPTLY AS NEEDED.
6. FENCES SHALL BE REMOVED WHEN THEY HAVE SERVED THEIR USEFULNESS SO AS NOT TO BLOCK OR IMPEDE STORM FLOW OR DRAINAGE.

SILTATION FENCE

(NOT TO SCALE)

PER TOWN OF CONCORD–PUBLIC WORKS; PLAN NO. EC–3

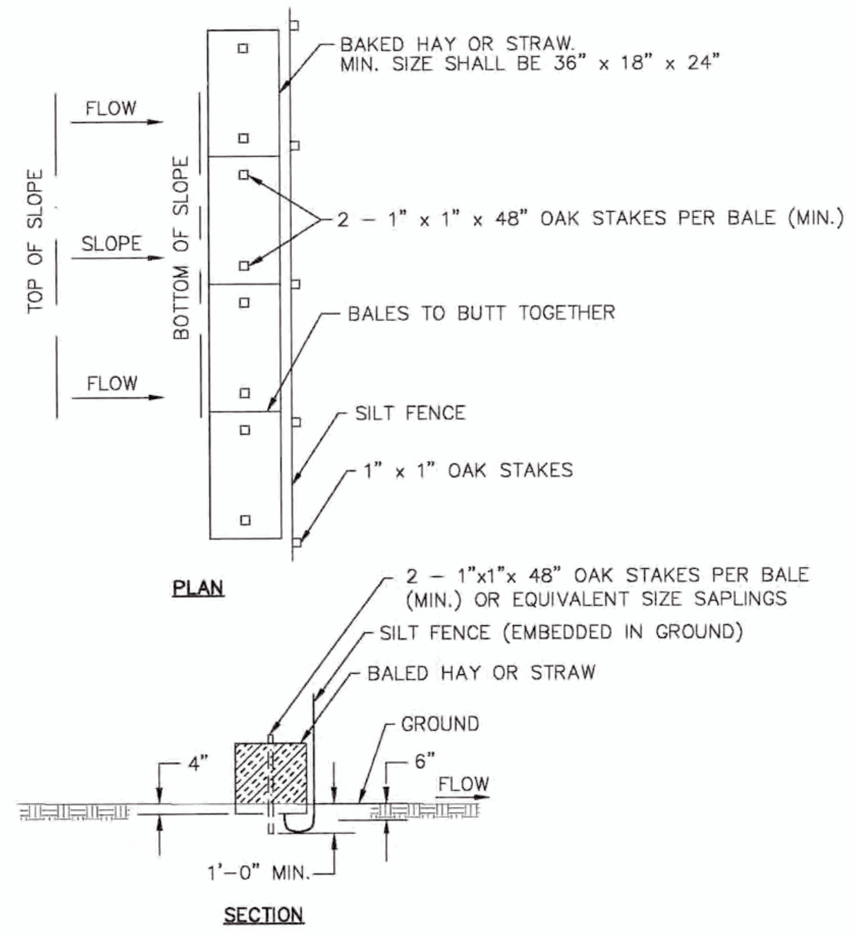

HAYBALES AND SILT FENCE

(NOT TO SCALE)

PER TOWN OF CONCORD–PUBLIC WORKS; PLAN NO. EC–4

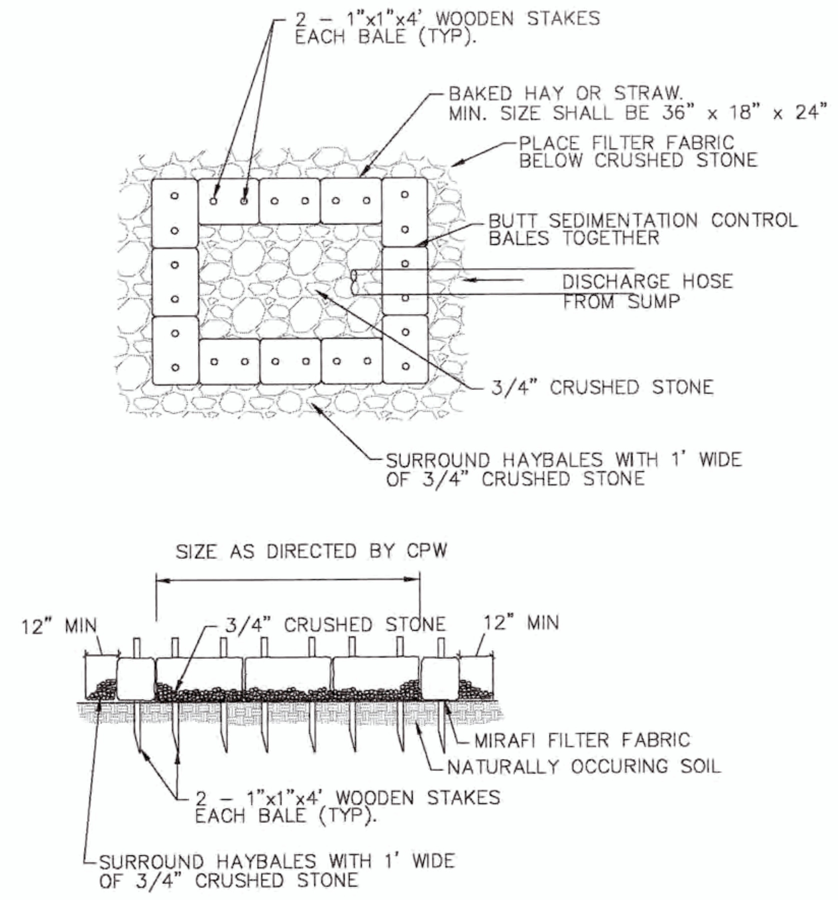

ONSITE DEWATERING BASIN

(NOT TO SCALE)

PER TOWN OF CONCORD–PUBLIC WORKS; PLAN NO. EC–5

CENTER & MAIN
EROSION AND SEDIMENTATION CONTROL NOTES:

1. THE SITE IS SUBJECT TO THE PERMIT REQUIREMENTS OF THE EPA NPDES PROGRAM. THE DEVELOPER SHALL SUBMIT COPIES OF SAID PERMIT AND REPORTING REQUIREMENTS TO THE TOWN AS A CONDITION OF THE SPECIAL PERMIT ISSUED BY THE BOARD OF APPEALS. DEVELOPER SHALL COMPLY WITH ANY ADDITIONAL EROSION CONTROL MEASURES IDENTIFIED BY THE NPDES PROGRAM NOT INDICATED ON THIS PLAN, IF THEY SO EXIST.

1A. EROSION AND SEDIMENT CONTROL MEASURES SHALL BE IMPLEMENTED FOR EACH PHASE PRIOR TO ANY CONSTRUCTION OCCURRING ON SITE.

2. DURING DEVELOPMENT AND CONSTRUCTION, ADEQUATE PROTECTIVE MEASURES SHALL BE PROVIDED TO MINIMIZE DAMAGE FROM SURFACE WATER TO THE CUT FACE OF EXCAVATIONS OR THE SLOPING SURFACE OF FILLS. THE BOARD OF APPEALS RESERVES THE RIGHT TO REQUIRE ADDITIONAL MEASURES IF PROBLEMS ARE NOTED BY A REPRESENTATIVE OF THE TOWN OR APPOINTED CONSULTANT.

3. LAND SHALL BE DEVELOPED IN INCREMENTS OF WORKABLE SIZE WHICH CAN BE COMPLETED DURING A SINGLE CONSTRUCTION SEASON. EROSION AND SEDIMENT CONTROL MEASURES SHALL BE COORDINATED WITH THE SEQUENCE OF TRADING, DEVELOPMENT, AND CONSTRUCTION, OPERATIONS. CONTROL MEASURES SUCH AS HYDROSEEDING, BERMS, INTERCEPTOR DITCHES, TERRACES, AND SEDIMENT TRAPS SHALL BE PUT INTO EFFECT PRIOR TO THE COMMENCEMENT OF EACH INCREMENT OF THE DEVELOPMENT/CONSTRUCTION PROCESS.

4. CONTRACTOR SHALL INSPECT AND REPAIR ALL EROSION CONTROL DEVICES, IF INTENSE RAINFALL IS PREDICTED. THE CONTRACTOR'S REPRESENTATIVE SHALL INSPECT THE CONSTRUCTION SITE AT LEAST EVERY 7 DAYS AND WITHIN 24 HOURS OF A RAINFALL OF 0.5 INCHES OR MORE. AREAS WITH SITES THAT HAVE BEEN FINALLY STABILIZED MUST BE INSPECTED AT LEAST ONCE A MONTH.

5. ALL SOIL STOCK PILES SHALL HAVE EROSION CONTROL MEASURES AROUND THEIR EDGES AT ALL TIMES. SOIL STOCK PILES SHALL BE COVERED WITH TEMPORARY VEGETATION OR FASTENED TARPAULIN SHEETS.

6. DURING DRIVEWAY CONSTRUCTION, THE CONTRACTOR SHALL MAINTAIN A ONE FOOT HIGH BY TWO FOOT WIDE EARTHEN BERM ALONG THE EDGES OF THE DRIVEWAY TO DIVERT RUNOFF TO A SEDIMENT BASIN. STRAWBALES MAY BE UTILIZED TO DIVERT RUNOFF FROM THE DRIVEWAY LOW POINTS TO THE SEDIMENT BASIN DURING CONSTRUCTION UNTIL THE DRAINAGE SYSTEM IS INSTALLED (SEE EARTHEN BERM DETAIL.)

7. ALL CATCH BASIN AND MANHOLE RIMS SHALL BE COVERED WITH SILTATION FABRIC DURING CONSTRUCTION. CATCH BASIN GRATES ARE TO BE SET AT BINDER GRADE AND INSTALL SILT SACK UNTIL IT IS TIME TO APPLY THE PAVEMENT WEARING COURSE.

8. ALL CATCH BASIN SUMPS AND DRAINAGE BASINS SHALL BE CLEANED DURING AND FOLLOWING CONSTRUCTION. THEREAFTER REFER TO OPERATION AND MAINTENANCE PLAN FILED WITH NOTICE OF INTENT.

9. SEDIMENT BASINS (DEBRIS, BASINS, DE–SILTING BASINS, OR SILT TRAPS) SHALL BE INSTALLED IN CONJUNCTION WITH THE INITIAL GRADING OPERATIONS AND MAINTAINED THROUGH THE DEVELOPMENT PROCESS TO REMOVE SEDIMENT FROM RUNOFF WATERS DRAINING FROM LAND UNDERGOING DEVELOPMENT.

10. THE DEVELOPER IS REQUIRED TO CLEAN UP ANY SAND, DIRT, OR DEBRIS WHICH ERODES FROM THE SITE ONTO ANY PUBLIC STREET OR PRIVATE PROPERTY, AND TO REMOVE SILT OR DEBRIS THAT ENTERS ANY EXISTING DRAINAGE SYSTEM INCLUDING CATCH BASIN SUMPS, PIPE LINES, MANHOLES AND DITCHES.

11. VELOCITY CHECK DAMS – STRAWBALES WILL BE USED AROUND THE CATCH BASINS ON THE PROPOSED STREETS TO PROTECT THEM FROM THE ERODING SOILS AND PROVIDE A CHECK DAM* TO SLOW THE RUNOFF DURING THE CONSTRUCTION. THE DEVELOPER SHALL PROVIDE VELOCITY CHECK DAMS* IN ALL UNPAVED STREET AREAS AT THE INTERVALS INDICATED BELOW:

GRADE OF THE STREET	INTERVALS BETWEEN CHECKDAMS
LESS THAN 4%	100 FEET
4% TO 10%	50 FEET
OVER 10%	25 FEET

THE DEVELOPER SHALL PROVIDE VELOCITY CHECK DAMS* IN ALL UN–VEGETATED OR UNPAVED CHANNELS AT THE INTERVALS INDICATED BELOW:

GRADE OF THE CHANNEL	INTERVALS BETWEEN CHECK DAMS
LESS THAN 3%	100 FEET
3% TO 6%	50 FEET
OVER 6%	25 FEET

12. ALL CUT AND FILL SLOPES SHALL BE IMMEDIATELY COVERED WITH 6" LOAM AND SEEDED DURING THE GROWING SEASON (APRIL 1 TO NOVEMBER 1) OR COVERED WITH A STRAW MULCH DURING THE NON–GROWING SEASON (NOVEMBER 1 TO APRIL 1). IN AREAS SUBJECT TO THE WETLANDS PROTECTION ACT, THE STRAW MULCH AND/OR REQUIRED MEASURES SHALL REMAIN IN PLACE UNTIL PERMANENT VEGETATION IS RE–ESTABLISHED.

13. DISTURBED AREAS WHERE CONSTRUCTION HAS PERMANENTLY OR TEMPORARILY CEASED MUST BE STABILIZED WITHIN 14 DAYS OF THE LAST DISTURBANCE. AREAS WHICH WILL BE REDISTURBED WITHIN 21 DAYS DO NOT HAVE TO BE STABILIZED.

14. *CHECK DAMS IN UNPAVED STREETS AND UN–VEGETATED OR UNPAVED GRADED CHANNELS BE CONSTRUCTED OF STAKED STRAW BALES OR OTHER EROSION RESISTANT MATERIALS APPROVED BY THE BOARD. THE CHECK DAMS SHALL BE INSTALLED AT THE END OF EACH WORKING DAY, AND IN THE EVENT OF RAINFALL BEING PREDICTED. THE STRAW BALES SHOULD BE SECURELY STAKED TO PREVENT OVERTURNING, FLOATATION, OR DISPLACEMENT. THEY SHALL EXTEND COMPLETELY ACROSS THE STREET OR CHANNEL AT RIGHT ANGLES TO THE CENTERLINE. ALSO, A VELOCITY CHECK DAM SHALL BE PROVIDED EACH DRIVEWAY TO PROTECT THE PUBLIC STREETS AND ADJACENT PROPERTIES FROM THE HAZARDS OF EROSION. ALL CHECK DAMS SHALL BE CLEANED OUT OF ALL DEBRIS AND SILT PERIODICALLY.

15. ADDITIONAL EROSION CONTROL MEASURES SHALL BE STOCK–PILED ON–SITE, INCLUDING BUT NOT LIMITED TO CRUSHED STONE, STRAW BALES, SILT FENCE AND EROSION CONTROL MATS.

16. THE SEDIMENT SHALL BE REMOVED BEHIND ALL STRAW BALES AND SILT FENCES IF DEPTH EXCEEDS 6". SEDIMENT SHALL BE REMOVED TO OUTSIDE THE BUFFER ZONE OF THE WETLANDS WHERE APPLICABLE.

17. THE EROSION CONTROL DEVICES SHALL BE MAINTAINED UNTIL ALL TRIBUTARY SURFACES ARE STABILIZED.

18. DURING CONSTRUCTION, THE CONTRACTOR SHALL SPRAY DOWN THE SITE WITH A WATER TRUCK AS NEEDED FOR DUST CONTROL IN ACCORDANCE WITH LOCAL, STATE, AND FEDERAL REGULATIONS. TEMPORARY VEGETATION AND/OR USE OF TARPAULIN MAY BE NECESSARY.

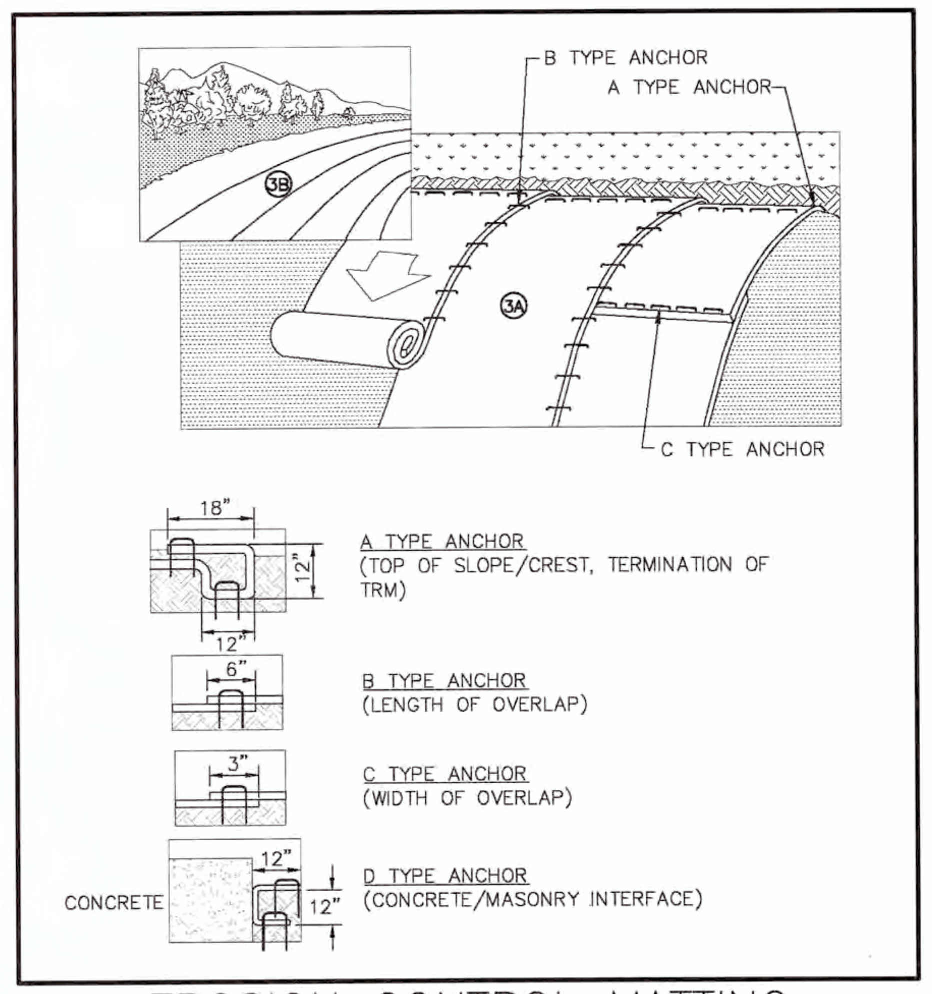

EROSION CONTROL MATTING

(NOT TO SCALE)

PER TOWN OF CONCORD–PUBLIC WORKS; PLAN NO. EC–8

EROSION CONTROL MATTING INSTALLATION NOTES

1. INSTALL TURF REINFORCEMENT MAT (TRM) IN ACCORDANCE WITH MANUFACTURERS INSTRUCTIONS. MANUFACTURERS REPRESENTATIVE SHALL INSPECT THE SITE PREPARATION PRIOR TO INSTALLATION OF THE TURF REINFORCEMENT MAT AND PROVIDE ON SITE SUPERVISION FOR THE INSTALLATION. UPON COMPLETION, THE REPRESENTATIVE SHALL PROVIDE WRITTEN CERTIFICATION AS TO THE ACCEPTABILITY OF THE INSTALLATION.

2. PREPARE SOIL BEFORE INSTALLING TRM, INCLUDING ANY NECESSARY APPLICATION OF LIME, FERTILIZER AND SEED. NOTE: WHEN USING CELL DO NOT SEED PREPARED AREA. CELL–O–SEED MUST BE INSTALLED WITH PAPER SIDE DOWN.

3. BEGIN AT THE TOP OF THE SLOPE BY ANCHORING THE TRM IN A 6"dX6"w TRENCH WITH APPROXIMATELY 12" OF TRM EXTENDED BEYOND THE UP–SLOPE PORTION OF THE TRENCH. ANCHOR THE TRM WITH A ROW OF STAPLES/STAKES APPROXIMATELY 12" APART IN THE BOTTOM OF THE TRENCH. BACKFILL AND COMPACT THE TRENCH AFTER STAPLING. APPLY SEED TO COMPACTED SOIL AND FOLD REMAINING 12" PORTION OF TRM BACK OVER SEED AND COMPACTED SOIL. SECURE TRM OVER COMPACTED SOIL WITH A ROW OF STAPLES/STAKES SPACED APPROXIMATELY 12" APART ACROSS THE WIDTH OF THE TRM

4. ROLL THE TRM (A.) DOWN OR (B.) HORIZONTALLY ACROSS THE SLOPE. TRM WILL UNROLL WITH APPROPRIATE SIDE AGAINST THE SOIL SURFACE. ALL TRM MUST BE SECURELY FASTENED TO SOIL SURFACE BY PLACING STAPLES/STAKES IN APPROPRIATE LOCATIONS AS SHOWN IN THE STAPLE PATTERN GUIDE. WHEN USING THE DOT SYSTEM, STAPLES/STAKES SHOULD BE PLACED THROUGH EACH OF THE COLORED DOTS CORRESPONDING TO THE APPROPRIATE STAPLE PATTERN.

5. THE EDGES OF PARALLEL TRM MUST BE STAPLED WITH APPROXIMATELY 2"–5" OVERLAP DEPENDING ON TRM TYPE.

6. CONSECUTIVE TRM SPLICED DOWN THE SLOPE MUST BE PLACED END OVER END (SHINGLE STYLE) WITH AN APPROXIMATE 6" OVERLAP. STAPLE THROUGH OVERLAPPED AREA, APPROXIMATELY 12" APART ACROSS ENTIRE TRM WIDTH.

NOTE: IN LOOSE SOIL CONDITIONS, THE USE OF STAPLE OR STAKE LENGTHS GREATER THAN 6" MAY BE NECESSARY TO PROPERLY SECURE THE TRM.

7. WHERE THE BLANKETS RUN PARALLEL TO CONCRETE OR STONE MASONRY WALL, PLACE AND SECURE BLANKET WITH D–TYPE ANCHOR.

EROSION CONTROL MATTING INSTALLATION NOTES

(NOT TO SCALE)

PER TOWN OF CONCORD–PUBLIC WORKS; PLAN NO. EC–9

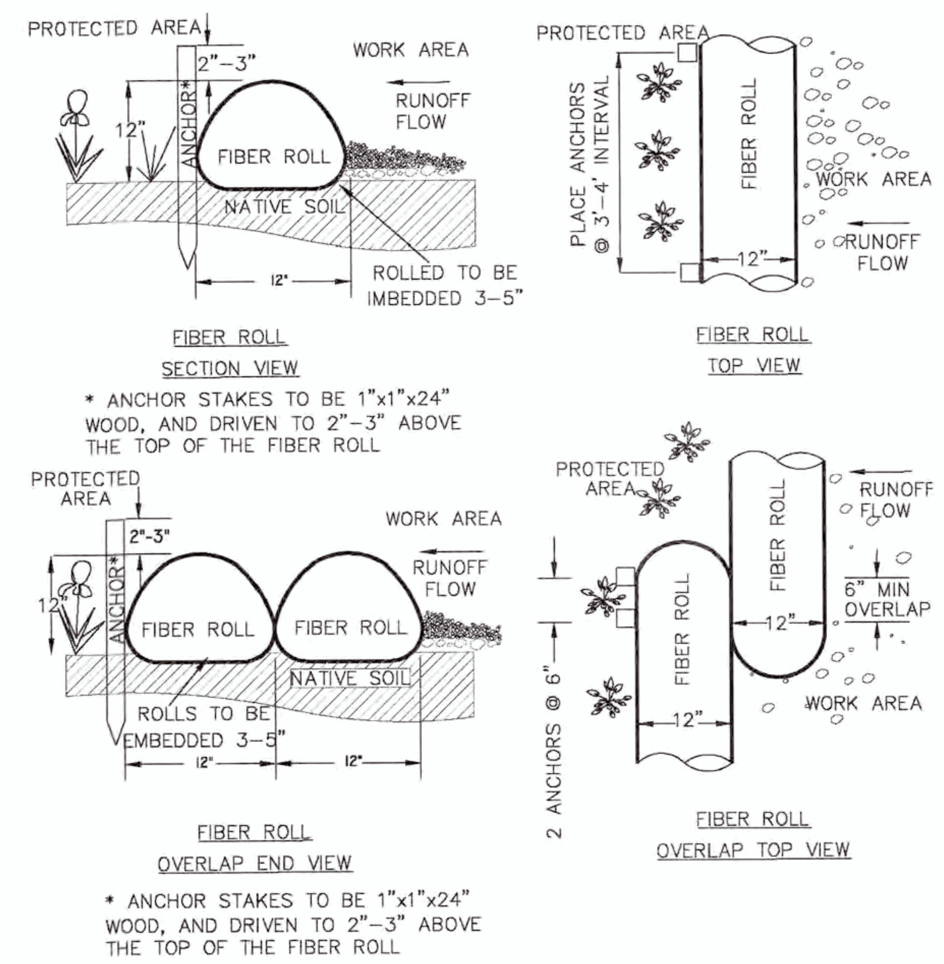

EROSION CONTROL FIBER ROLL DETAIL

(NOT TO SCALE)

PER TOWN OF CONCORD–PUBLIC WORKS; PLAN NO. EC–10

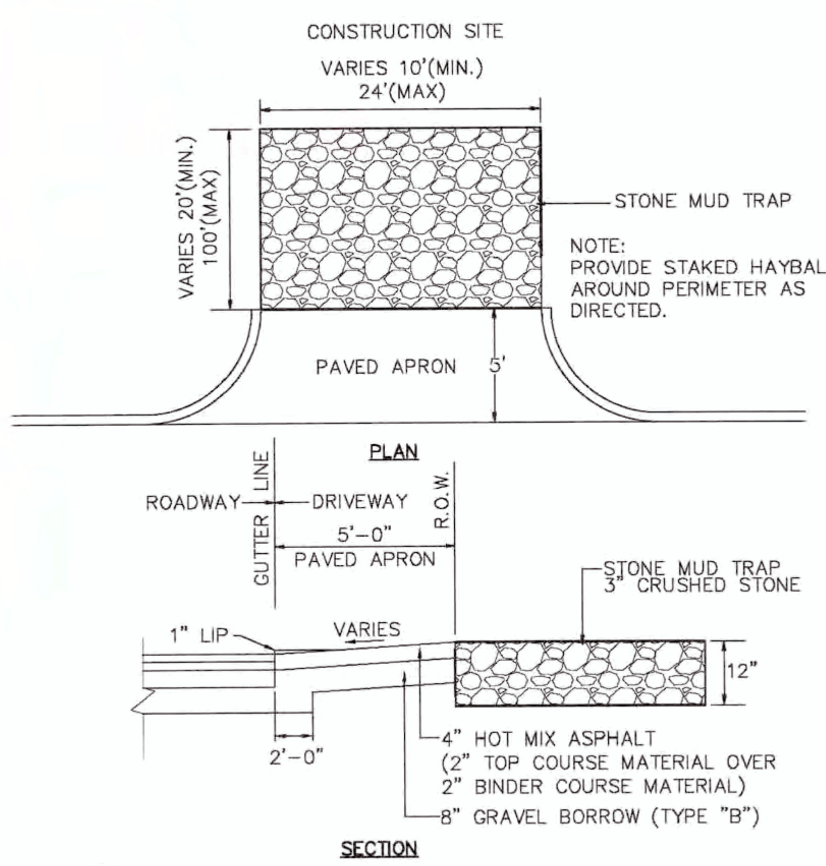

NOTE:
STONE MUD TRAP SHALL BE REMOVED AND REPLACED WHEN FILLED WITH SEDIMENT OR AS REQUIRED BY THE TOWN ENGINEER OR HIS DESIGNEE.

TEMPORARY CONSTRUCTION ENTRANCE

(NOT TO SCALE)

PER TOWN OF CONCORD–PUBLIC WORKS; PLAN NO. EC–7

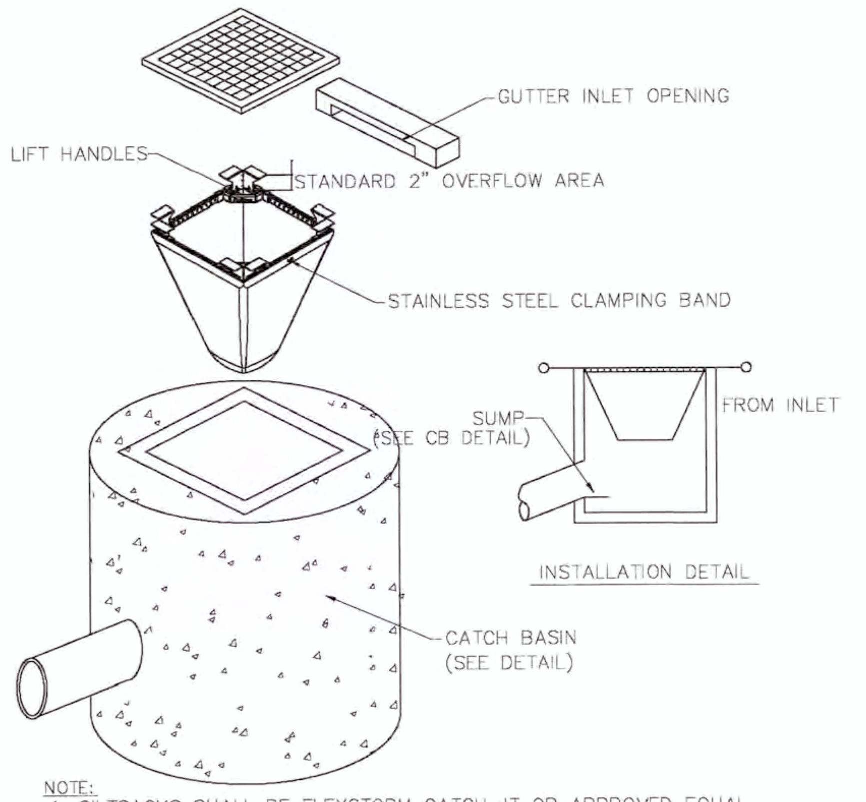

NOTE:
1. SILTSACKS SHALL BE FLEXSTORM CATCH–IT OR APPROVED EQUAL
2. SILTSACKS SHALL BE INSTALLED IN ALL CATCH BASIN UNTIL DRAINAGE AREA BEEN FULLY STABILIZED.

EROSION CONTROL SILT SACK

N.T.S.

EROSION CONTROL SILT SACK DETAIL

(NOT TO SCALE)

PER TOWN OF CONCORD–PUBLIC WORKS; PLAN NO. EC–11

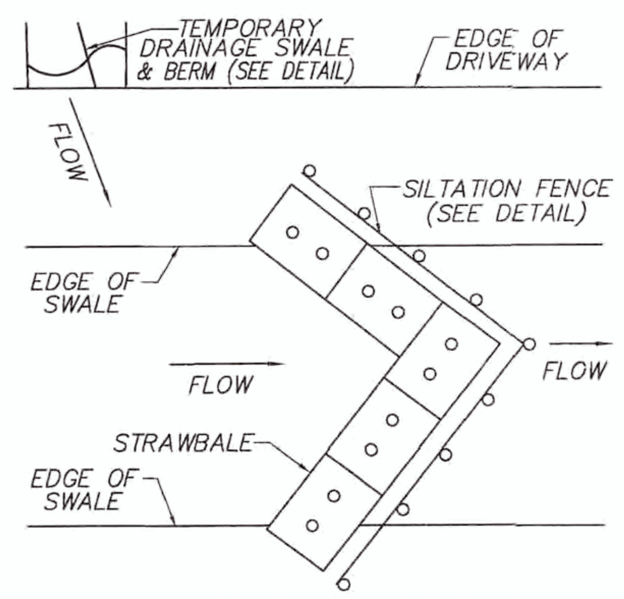

CHECK DAM DETAIL

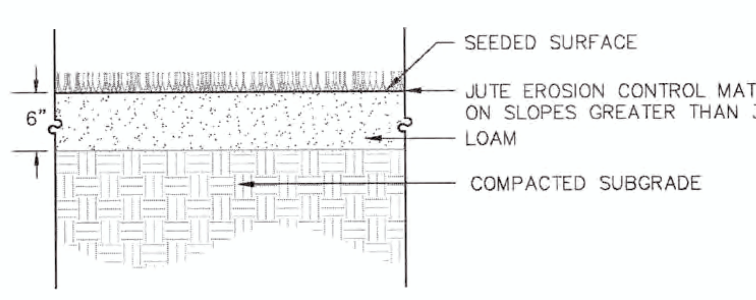

LOAM AND SEED

(NOT TO SCALE)

PER TOWN OF CONCORD–PUBLIC WORKS; PLAN NO. EC–13

POLLUTION PREVENTION STANDARDS

1. ALL CONSTRUCTION AND DOMESTIC WASTE SHALL BE DISPOSED OF OFFSITE AT AN APPROVED LOCATION. WASTE CONTAINERS SHALL BE PROVIDED AT THE START OF CONSTRUCTION. ON WORK DAYS, CLEAN UP AND DISPOSE OF WASTE IN DESIGNATED WASTE CONTAINERS. ANY OVERFLOW SHALL BE CLEANED UP IMMEDIATELY. THE CONTRACTOR SHALL FOLLOW LOCAL, STATE, AND FEDERAL SPILL PREVENTION AND RESPONSE PROCEDURES DURING CONSTRUCTION. MATERIALS SHALL BE COVERED OR STORED OFF SITE TO PREVENT EXPOSURE TO STORMWATER. CONTRACTOR SHALL PROVIDE INFORMATION LISTING EXPECTED MATERIALS TO BE STORED ON SITE, METHODS TO CONTROL WASTE MATERIALS, AND STORAGE METHODS.
2. PORTABLE TOILETS SHALL BE LOCATED ON SECURE GROUND IN AN AREA NOT PRONE TO FLIPPING OR BEING KNOCKED OVER.
3. ALL CONCRETE AND OTHER MATERIAL WASTEWATER MUST BE DIRECTED INTO LEAK–PROOF CONTAINERS. DO NOT DUMP LIQUID WASTE INTO STORM DRAINS. DISPOSE OF WASTE PROPERLY. LOCATE ALL WASHOUT AREAS AS FAR FROM ANY SURFACE WATERS AND STORMWATER INLETS AS POSSIBLE. (SEE NOTE 4)
4. ALL AMENITIES SHALL BE LOCATED PRIOR TO THE START OF EACH PHASE OF CONSTRUCTION.
5. WHEEL WASHING SHALL BE PERFORMED ON THE CONSTRUCTION ENTRANCE.

WILLIAMS & SPARAGES
ENGINEERS | PLANNERS | SURVEYORS
189 NORTH MAIN STREET
SUITE 101
MIDDLETON, MA 01949
PHONE: (978) 539-8088
FAX: (978) 539-8200
WSENGINEERS.COM

Owner:
Faye Erhard Hayes
1450 Main Street
Concord, MA 01742

Applicant:
Symes Development & Permitting, LLC
50 Dodge Street, Suite 202
Beverly, MA 01915

Designed By: RJH
Drawn By: RJH
Reviewed By: RJH
Project Manager: RJH
Job File Number: CONC-0020
Drawing File Folder: MAIN0020

☐ Drawing Issued for Review Only
☒ Drawing Issued for Permit
☐ Drawing Issued for Construction

SEAL
COMMONWEALTH OF MASSACHUSETTS
RICHARD J. HARRINGTON
CIVIL
No. 41298
REGISTERED PROFESSIONAL ENGINEER
6/14/2019

6	
5	
4	
3	REVISED JUNE 14, 2019
2	REVISED MARCH 28, 2019 (1-Car Units 12, 15, 17, 19, 23 & 36)
1	REVISED MARCH 12, 2019

STORMWATER POLLUTION PREVENTION PLAN
CENTER & MAIN
1440 MAIN STREET, CONCORD, MA

0' 20' 40' 80'
SCALE: 1"=40'
DECEMBER 6, 2018

DRAWING: 8.2
SHEET 12 OF 12