MASSACHUSETTS DEPARTMENT OF TRANSPORTATION
HIGHWAY DIVISION

ACTON & CONCORD
BRUCE FREEMAN RAIL PHASE 2B

STATE	FED. AID PROJ. NO.	SHEET NO.	TOTAL SHEETS
MA	-	1	15
PROJECT FILE NO.	606223		

PRELIMINARY RIGHT OF WAY
TITLE SHEET & INDEX

PLAN AND PROFILE OF

BRUCE FREEMAN RAIL PHASE 2B

IN THE TOWN OF

ACTON & CONCORD

MIDDLESEX COUNTY COUNTY

FEDERAL AID PROJECT NO. -

THE MASSACHUSETTS HIGHWAY DEPARTMENT STANDARD SPECIFICATIONS FOR HIGHWAYS AND BRIDGES DATED 1988, AS AMENDED, THE SUPPLEMENTAL SPECIFICATIONS DATED JULY 1, 2015, THE OCTOBER 2017 CONSTRUCTION STANDARD DETAILS, THE 2015 OVERHEAD SIGNAL STRUCTURE AND FOUNDATION STANDARD DRAWINGS, MASSDOT TRAFFIC MANAGEMENT PLANS AND DETAIL DRAWINGS, THE LATEST MANUAL ON UNIFORM TRAFFIC CONTROL DEVICES FOR STREETS AND HIGHWAYS WITH MASSACHUSETTS AMENDMENTS, THE 1990 STANDARD DRAWINGS FOR SIGNS AND SUPPORTS, THE 1968 STANDARD DRAWINGS FOR TRAFFIC SIGNALS AND HIGHWAY LIGHTING, AND THE LATEST EDITION OF THE AMERICAN STANDARD FOR NURSERY STOCK, WILL GOVERN.

PRELIMINARY RIGHT OF WAY

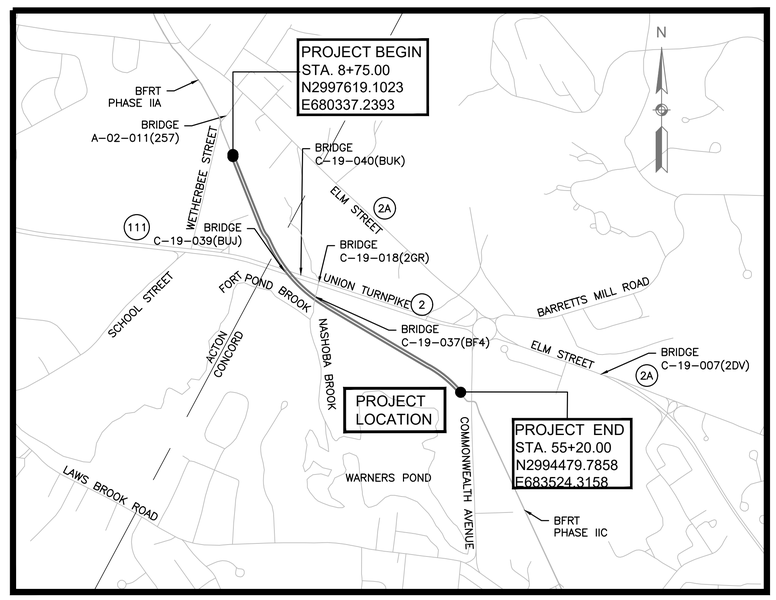

0 1000 2000 3000 4000
SCALE: 1" = 1000'

LENGTH OF PROJECT = 4,238.35 FEET = 0.803 MILES

INDEX

SHEET NO.	DESCRIPTION
1	TITLE SHEET & INDEX
2-3	TYPICAL SECTIONS
4	CRITICAL PROFILE
5	PARCEL SUMMARY SHEET
6	LOCATION PLAN
7-15	PROPERTY PLANS

DATE	DESCRIPTION	REV #
6/27/18	INITIAL SUBMISSION GPI	REV 3
3/1/17	FINAL 25% COMMENTS	REV 2
10/19/16	25% ROW SUBMISSION	REV 1
2/24/16	INITIAL ROW SUBMISSION	REV 0

GPI Greenman-Pedersen, Inc.
Engineering & Construction Services
181 Ballardvale Street, Suite 202, Wilmington, MA 01887
Tel: (978) 570-2999 Fax: (978) 658-3044
http://www.gpinet.com

massDOT
Massachusetts Department of Transportation
Highway Division

RECOMMENDED FOR APPROVAL

CHIEF ENGINEER DATE

DEPARTMENT OF TRANSPORTATION
FEDERAL HIGHWAY ADMINISTRATION

APPROVED:

DIVISION ADMINISTRATOR DATE

APPROVED

HIGHWAY ADMINISTRATOR DATE

606223_RW1_(TITLE SHEET).DWG Plotted on 27-Jun-2018 1:33 PM

ACTON & CONCORD
BRUCE FREEMAN RAIL PHASE 2B

STATE	FED. AID PROJ. NO.	SHEET NO.	TOTAL SHEETS
MA	-	2	15
PROJECT FILE NO.	606223		

PRELIMINARY RIGHT OF WAY
TYPICAL SECTION
SHEET 1 OF 2

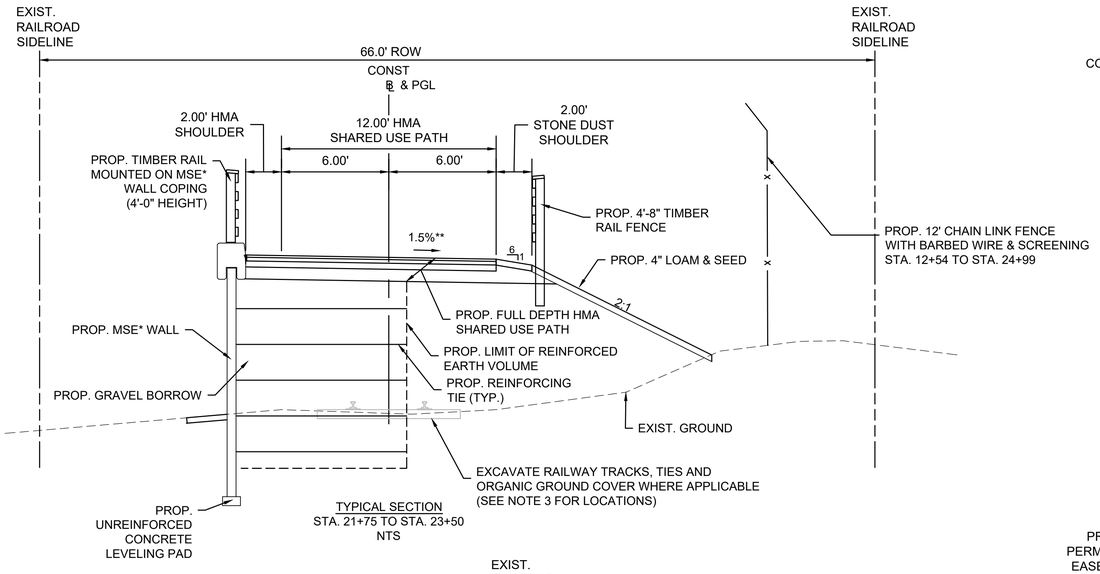

TYPICAL SECTION
STA. 21+75 TO STA. 23+50
NTS

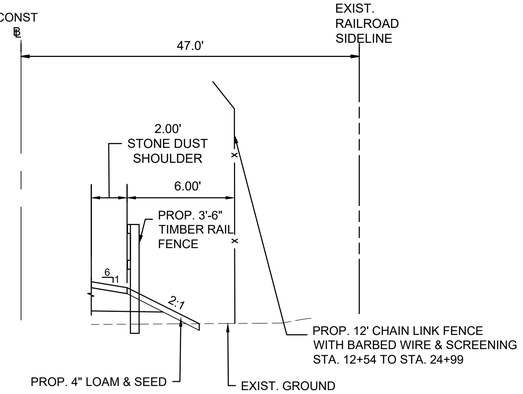

TYPICAL SECTION
LOCATIONS OF 3'-6" TIMBER RAIL FENCE - RIGHT
STA. 13+41 TO STA. 20+20
STA. 20+51 TO STA. 21+55

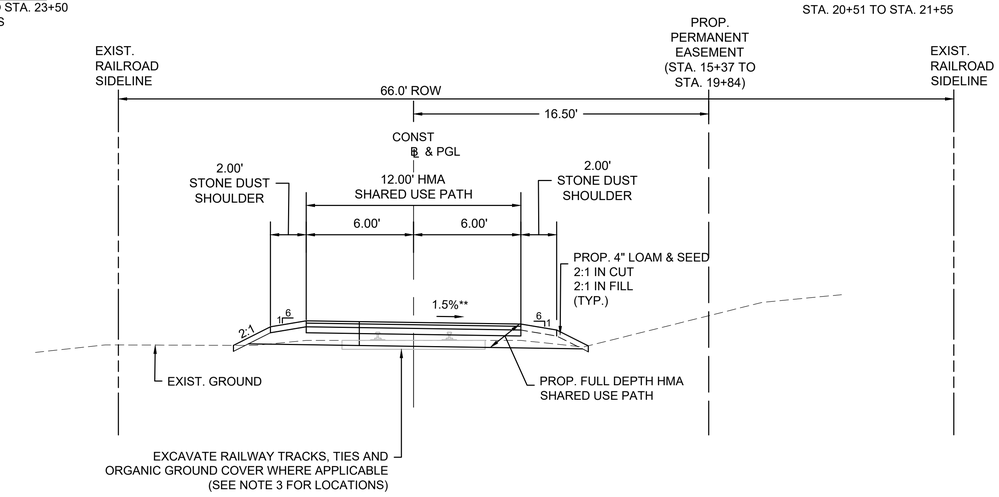

TYPICAL SECTION
STA. 8+75 TO STA. 21+75
STA. 31+75 TO STA. 55+06±
NTS

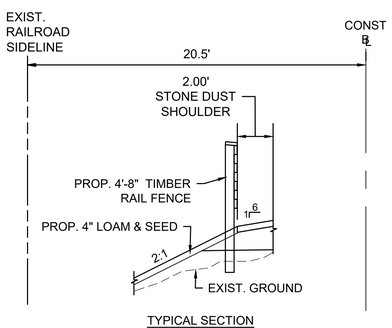

TYPICAL SECTION
LOCATIONS OF 4'-8" TIMBER RAIL FENCE - LEFT
STA. 21+55 TO STA. 21+75
STA. 31+75 TO STA. 32+25

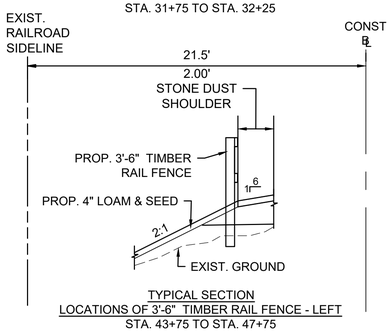

TYPICAL SECTION
LOCATIONS OF 3'-6" TIMBER RAIL FENCE - LEFT
STA. 43+75 TO STA. 47+75

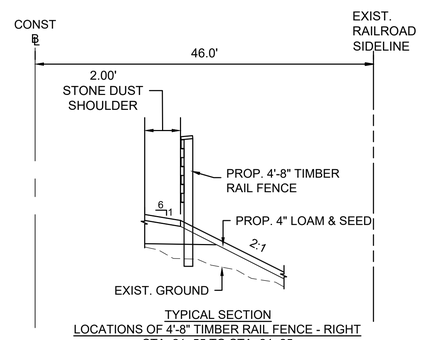

TYPICAL SECTION
LOCATIONS OF 4'-8" TIMBER RAIL FENCE - RIGHT
STA. 21+55 TO STA. 24+25
STA. 28+33 TO STA. 28+98
STA. 30+95 TO STA. 32+25

606223_RW2_(TYPICAL SECTIONS).DWG Plotted on 27-Jun-2018 1:33 PM

ACTON & CONCORD
BRUCE FREEMAN RAIL PHASE 2B

STATE	FED. AID PROJ. NO.	SHEET NO.	TOTAL SHEETS
MA	-	3	15
PROJECT FILE NO.	606223		

PRELIMINARY RIGHT OF WAY
TYPICAL SECTION
SHEET 2 OF 2

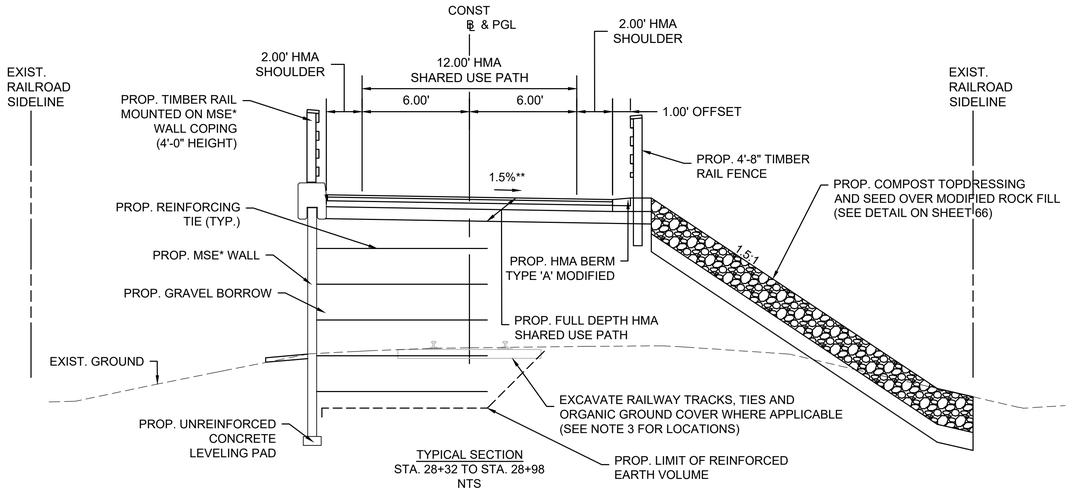

TYPICAL SECTION
STA. 28+32 TO STA. 28+98
NTS

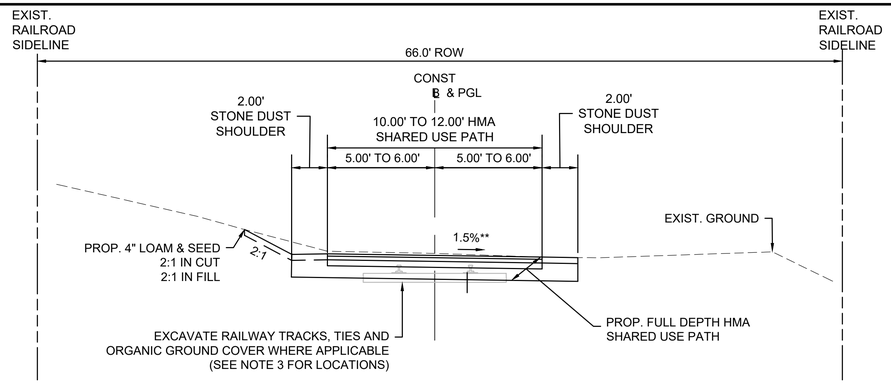

TYPICAL SECTION
STA. 55+06± TO STA. 55+22±
NTS

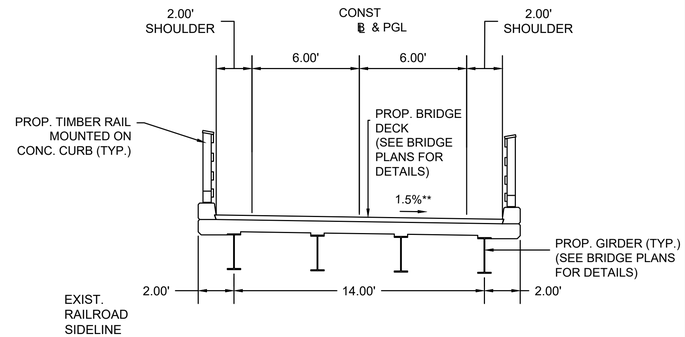

TYPICAL SECTION
BRIDGE SECTION OVER NASHOBA BROOK
STA. 29+31 TO STA. 29+81
NTS

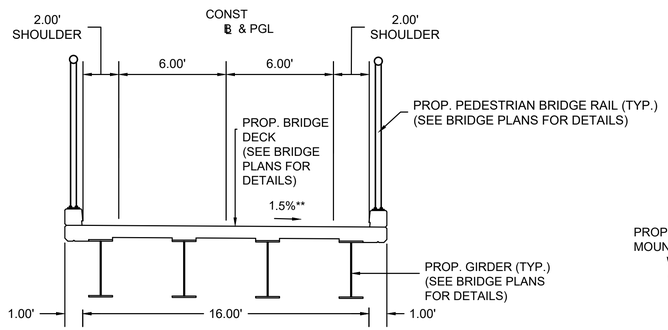

TYPICAL SECTION
BRIDGE SECTION OVER ROUTE 2
STA. 25+04 TO STA. 28+08
NTS

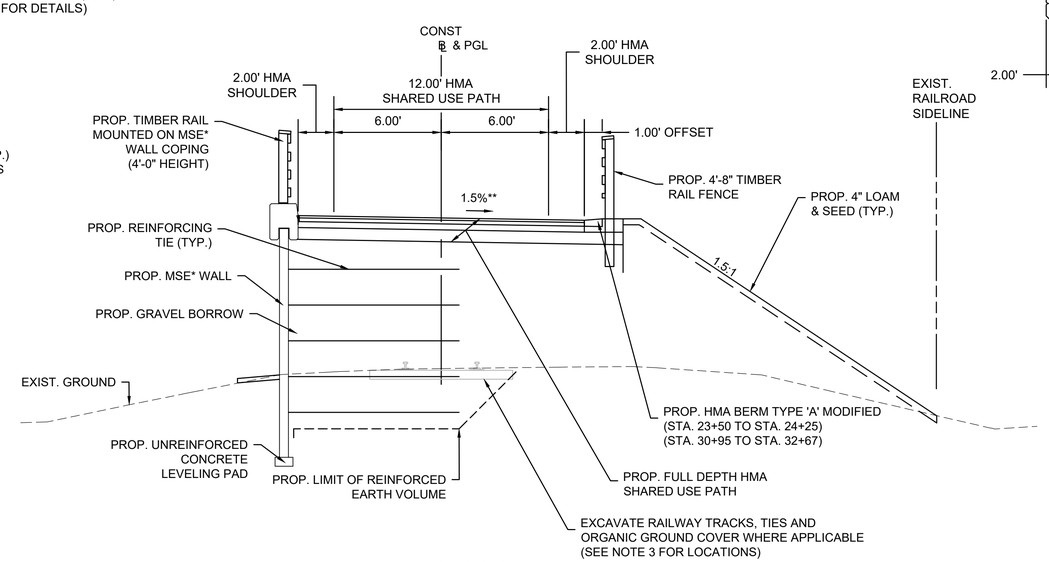

TYPICAL SECTION
STA. 23+50 TO STA. 24+25
STA. 30+95 TO STA. 31+75
NTS

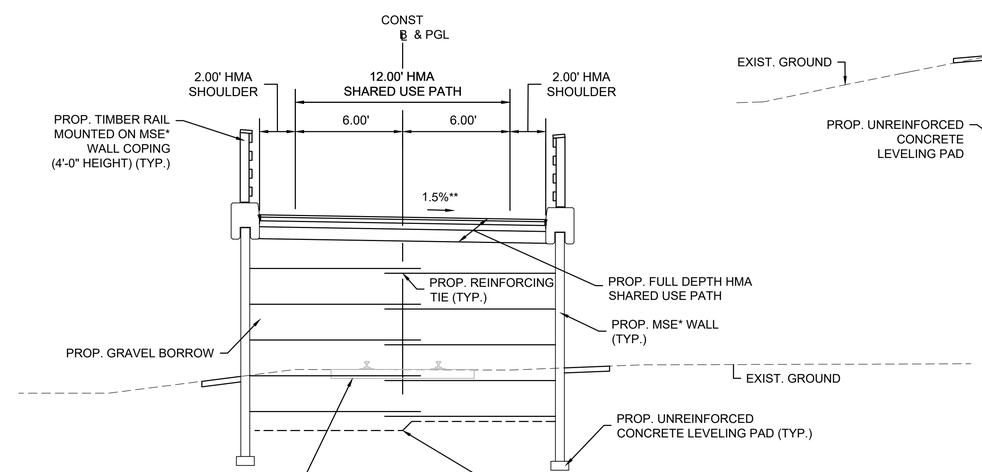

TYPICAL SECTION
STA. 24+25 TO STA. 24+74
STA. 30+05 TO STA. 30+95
NTS

606223_RW2_(TYPICAL SECTIONS).DWG Plotted on 27-Jun-2018 1:33 PM

ACTON & CONCORD
BRUCE FREEMAN RAIL PHASE 2B

STATE	FED. AID PROJ. NO.	SHEET NO.	TOTAL SHEETS
MA	-	4	15
PROJECT FILE NO.	606223		

PRELIMINARY RIGHT OF WAY
CRITICAL PROFILE

606223_RW3_(CRITICAL PROFILES).DWG 27-Jun-2018

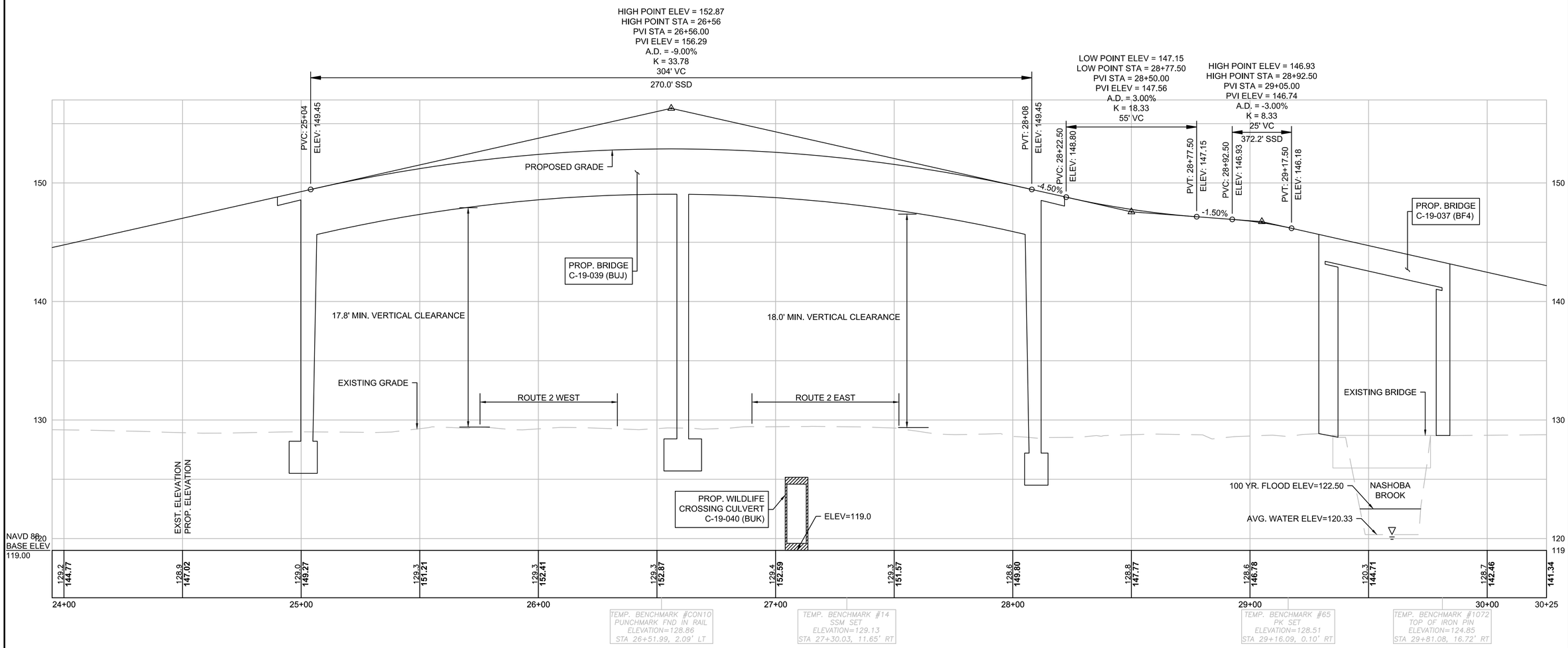

ACTON & CONCORD
BRUCE FREEMAN RAIL PHASE 2B

STATE	FED. AID PROJ. NO.	SHEET NO.	TOTAL SHEETS
MA	-	5	15
PROJECT FILE NO.	606223		

PRELIMINARY RIGHT OF WAY
PARCEL SUMMARY SHEET

PARCEL NO.	PLAN SHEET NO.	TITLEHOLDER	TITLE REFERENCE				AREA (S.F. +/-)						TOTAL PROPERTY AREA (S.F.)	REMARKS
			DEED BOOK	PAGE NO.	LCC NO.	CERT NO.	TAKEN		EASEMENT		TOTAL TAKEN	REMAINING		
							CITY	STATE	TYPE	AREA				
X-S-1	10	COMMONWEALTH OF MASSACHUSETTS DEPARTMENT OF CORRECTIONS	2647	1					PERM.	3,096				
A-LT-1	7, 8 ,9	COMMONWEALTH OF MASSACHUSETTS EXECUTIVE OFFICE OF TRANSPORTATION	14609	302					PERM.	87,704				
C-LT-1	9,10	COMMONWEALTH OF MASSACHUSETTS EXECUTIVE OFFICE OF TRANSPORTATION	14609	302					PERM.	9,506				
C-LT-2	10,11,12, 13,14,15	COMMONWEALTH OF MASSACHUSETTS EXECUTIVE OFFICE OF TRANSPORTATION	14609	302					PERM.	169,025				
A-TE-1	7	THE CLEMENT AND ELIZABETH MANAGEMENT TRUST	21756	36					PERM.	228				GRADING, LOAM AND SEED

606223_RW4_(PARCEL SUMMARY SHEET).DWG Plotted on 27-Jun-2018 1:34 PM

ACTON & CONCORD
BRUCE FREEMAN RAIL PHASE 2B

STATE	FED. AID PROJ. NO.	SHEET NO.	TOTAL SHEETS
MA	-	6	15
PROJECT FILE NO.	606223		

PRELIMINARY RIGHT OF WAY
PARCEL SUMMARY SHEET AND
LOCATION PLAN

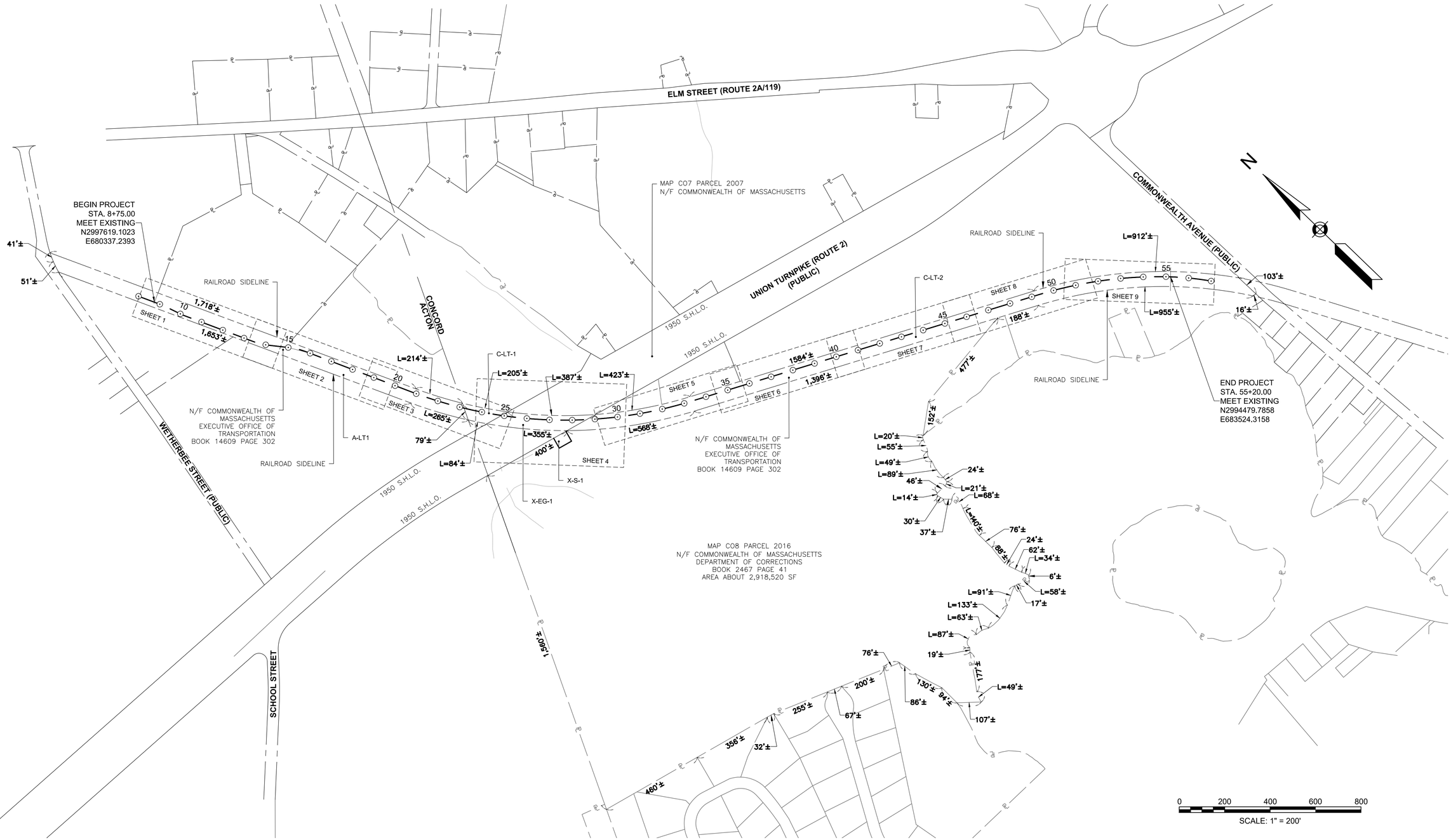

606223_RW5_(LOCATION PLAN).DWG Plotted on 27-Jun-2018 1:40 PM

ACTON & CONCORD
BRUCE FREEMAN RAIL PHASE 2B

STATE	FED. AID PROJ. NO.	SHEET NO.	TOTAL SHEETS
MA	-	7	15
PROJECT FILE NO.	606223		

PRELIMINARY RIGHT OF WAY
PROPERTY PLAN
SHEET 1 OF 9

606223_RW6_(PROPERTY PLAN).DWG 27-Jun-2018

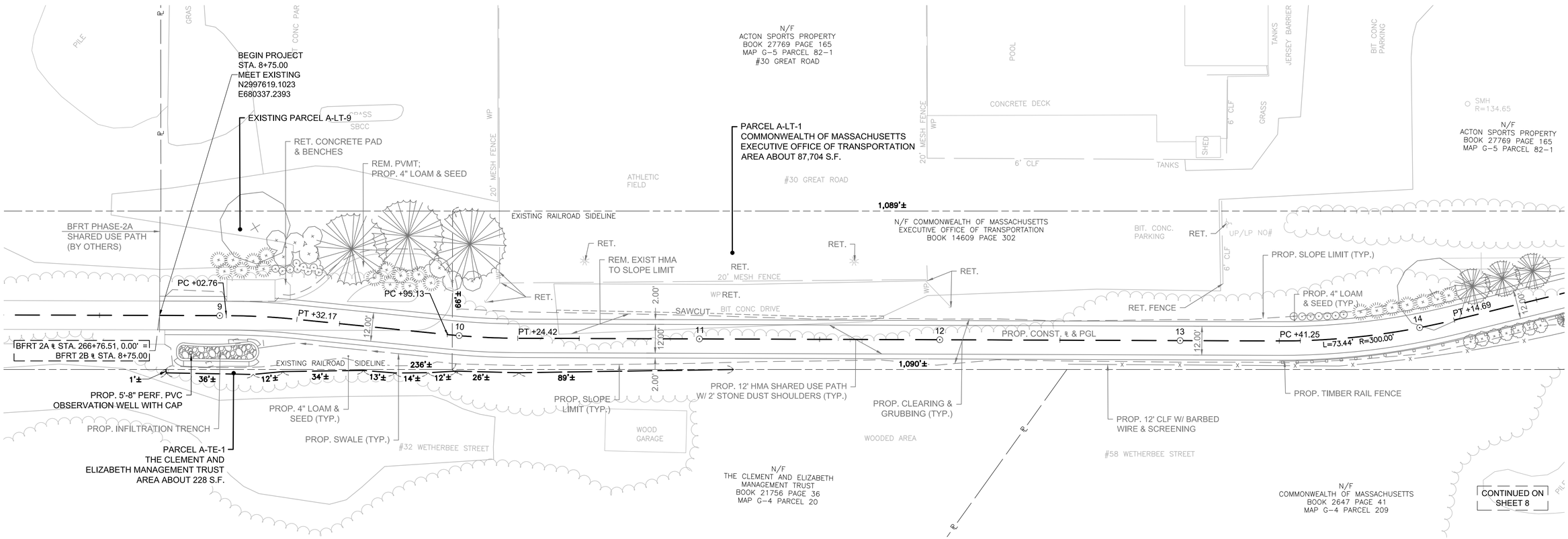

0 20 50 100
SCALE: 1" = 20'

ACTON & CONCORD
BRUCE FREEMAN RAIL PHASE 2B

STATE	FED. AID PROJ. NO.	SHEET NO.	TOTAL SHEETS
MA	-	8	15
PROJECT FILE NO.	606223		

PRELIMINARY RIGHT OF WAY
PROPERTY PLAN
SHEET 2 OF 9

606223_RW9_(PROPERTY PLAN).DWG 27-Jun-2018

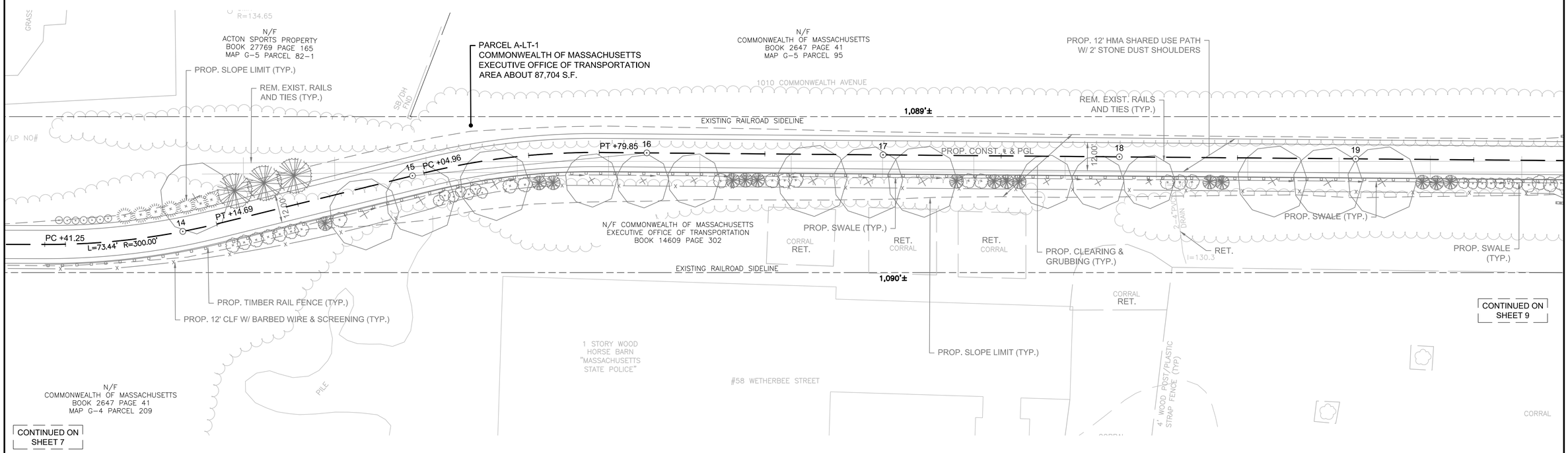

0 20 50 100
SCALE: 1" = 20'

ACTON & CONCORD
BRUCE FREEMAN RAIL PHASE 2B

STATE	FED. AID PROJ. NO.	SHEET NO.	TOTAL SHEETS
MA	-	9	15
PROJECT FILE NO.	606223		

PRELIMINARY RIGHT OF WAY
PROPERTY PLAN
SHEET 3 OF 9

27-Jun-2018

606223_RW9_(PROPERTY PLAN).DWG

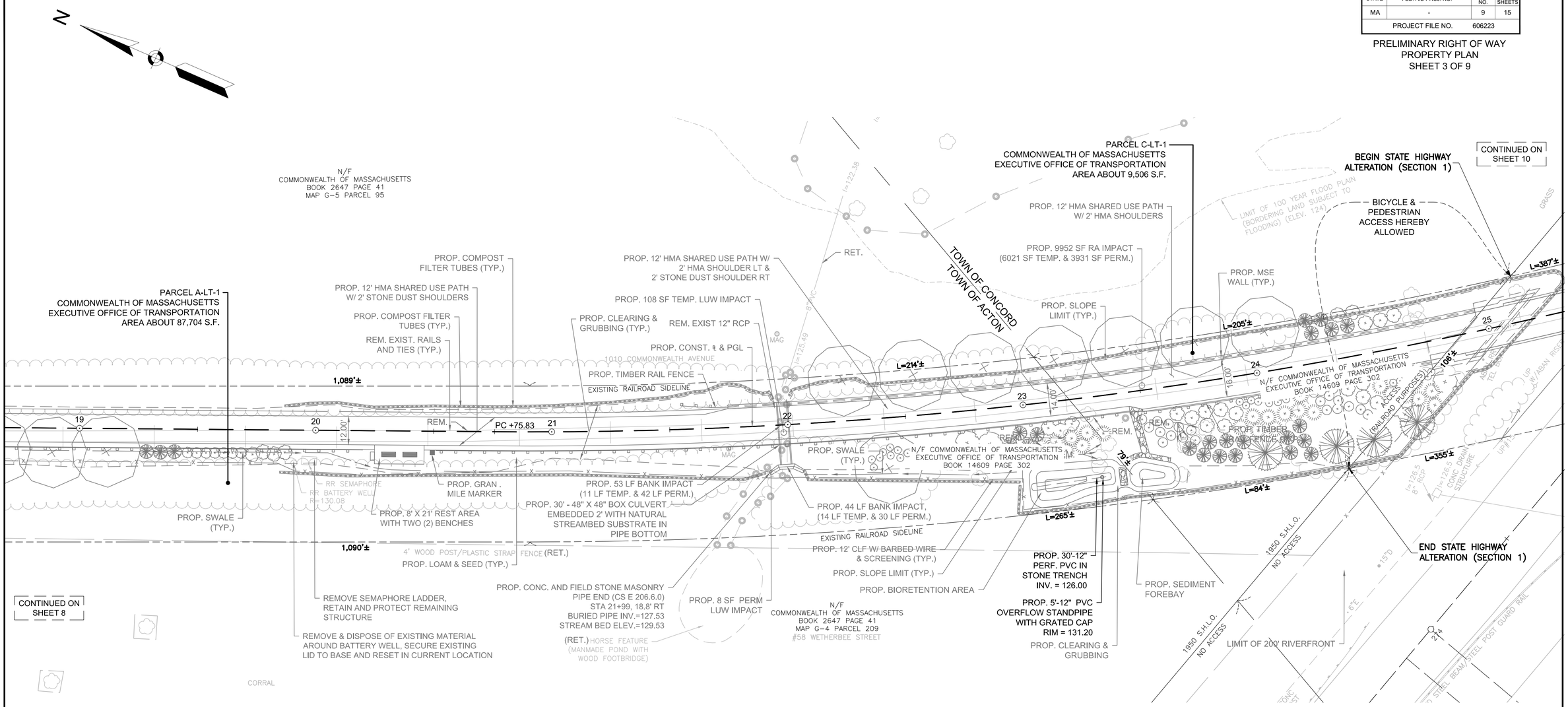

ACTON & CONCORD
BRUCE FREEMAN RAIL PHASE 2B

STATE	FED. AID PROJ. NO.	SHEET NO.	TOTAL SHEETS
MA	-	10	15
PROJECT FILE NO.	606223		

PRELIMINARY RIGHT OF WAY
PROPERTY PLAN
SHEET 4 OF 9

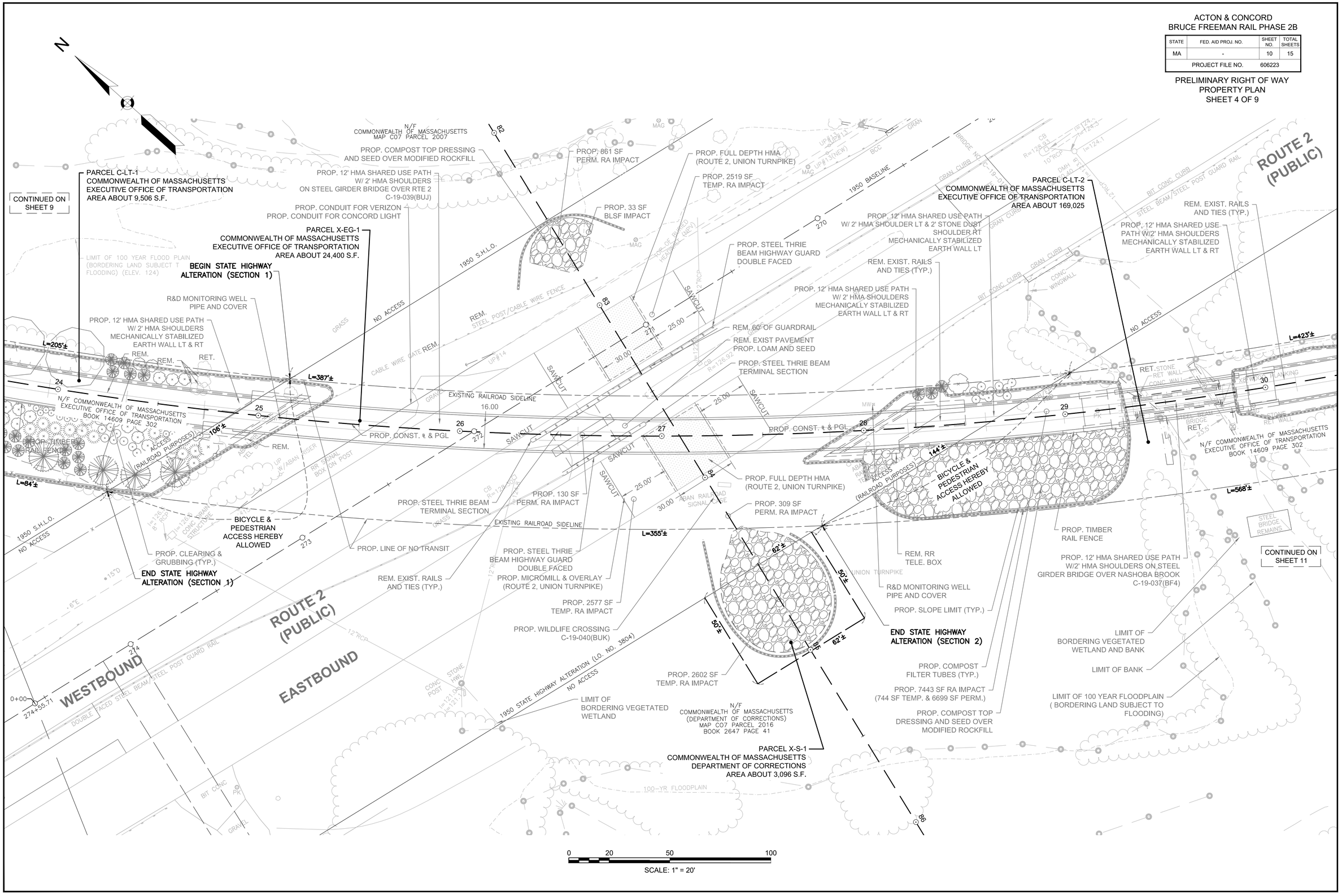

606223_RW9_(PROPERTY PLAN).DWG 27-Jun-2018

ACTON & CONCORD
BRUCE FREEMAN RAIL PHASE 2B

STATE	FED. AID PROJ. NO.	SHEET NO.	TOTAL SHEETS
MA	-	11	15
PROJECT FILE NO.	606223		

PRELIMINARY RIGHT OF WAY
PROPERTY PLAN
SHEET 5 OF 9

606223_RW9_(PROPERTY PLAN).DWG 27-Jun-2018

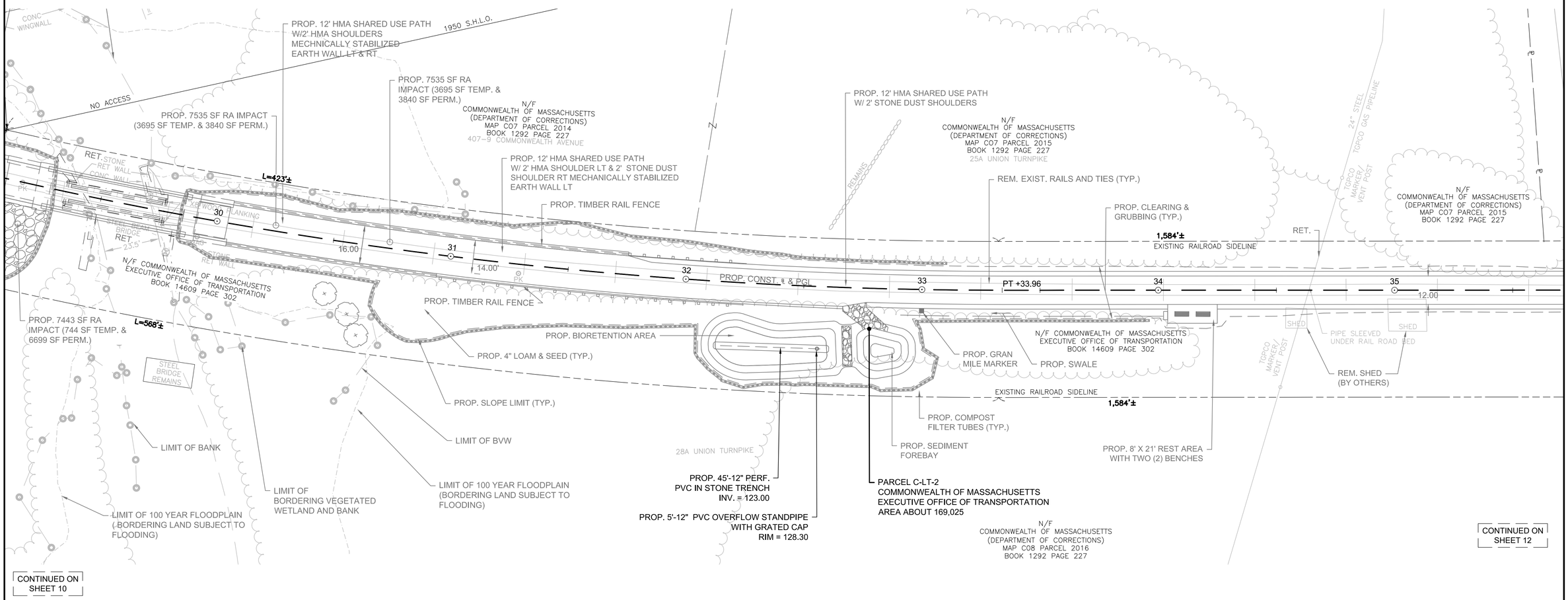

ACTON & CONCORD
BRUCE FREEMAN RAIL PHASE 2B

STATE	FED. AID PROJ. NO.	SHEET NO.	TOTAL SHEETS
MA	-	12	15
PROJECT FILE NO.	606223		

PRELIMINARY RIGHT OF WAY
PROPERTY PLAN
SHEET 6 OF 9

606223_RW9_(PROPERTY PLAN).DWG 27-Jun-2018

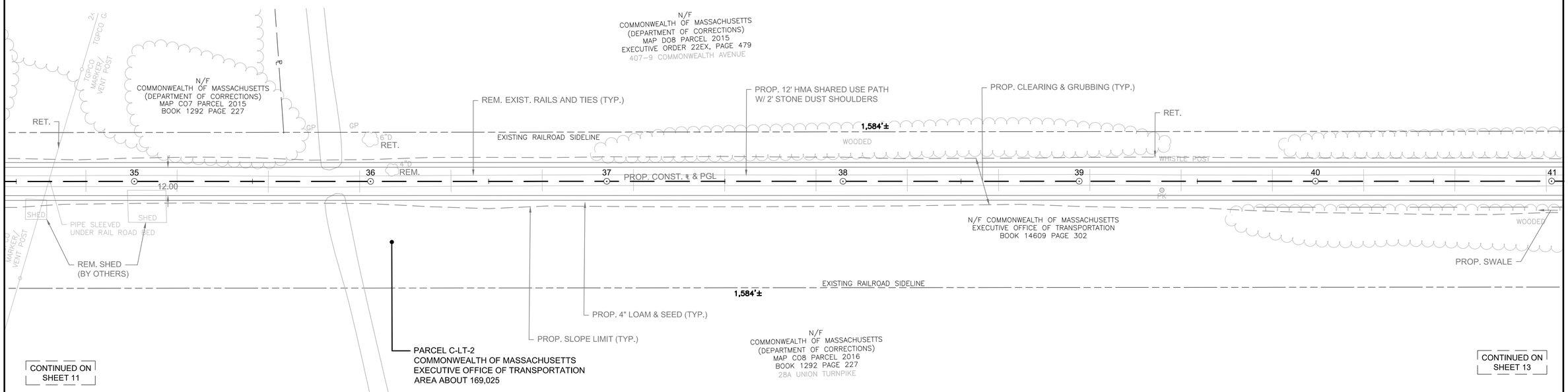

0 20 50 100
SCALE: 1" = 20'

ACTON & CONCORD
BRUCE FREEMAN RAIL PHASE 2B

STATE	FED. AID PROJ. NO.	SHEET NO.	TOTAL SHEETS
MA	-	13	15
PROJECT FILE NO.	606223		

PRELIMINARY RIGHT OF WAY
PROPERTY PLAN
SHEET 7 OF 9

606223_RW9_(PROPERTY PLAN).DWG 27-Jun-2018

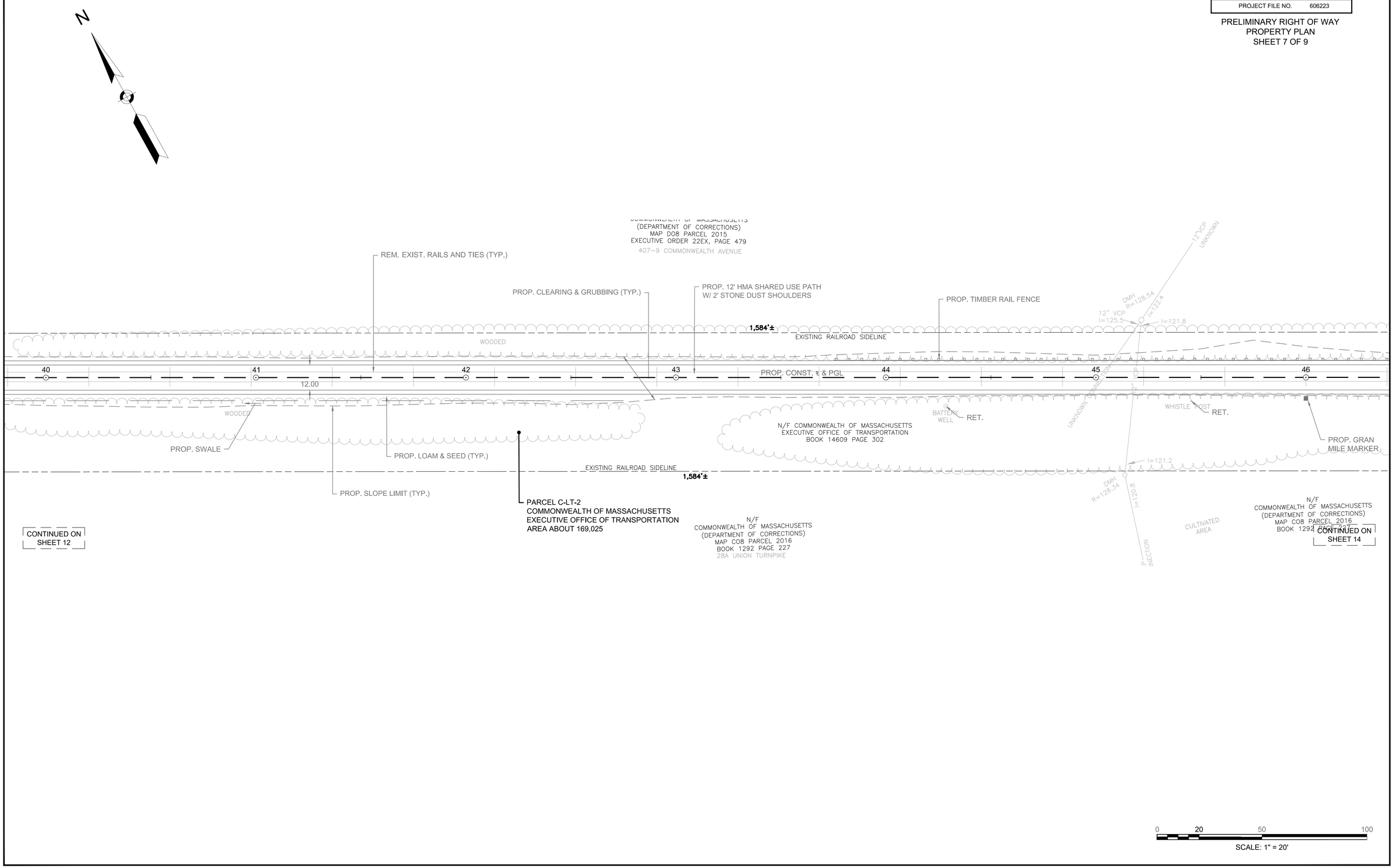

ACTON & CONCORD
BRUCE FREEMAN RAIL PHASE 2B

STATE	FED. AID PROJ. NO.	SHEET NO.	TOTAL SHEETS
MA	-	14	15
PROJECT FILE NO.	606223		

PRELIMINARY RIGHT OF WAY
PROPERTY PLAN
SHEET 8 OF 9

606223_RW9_(PROPERTY PLAN).DWG 27-Jun-2018

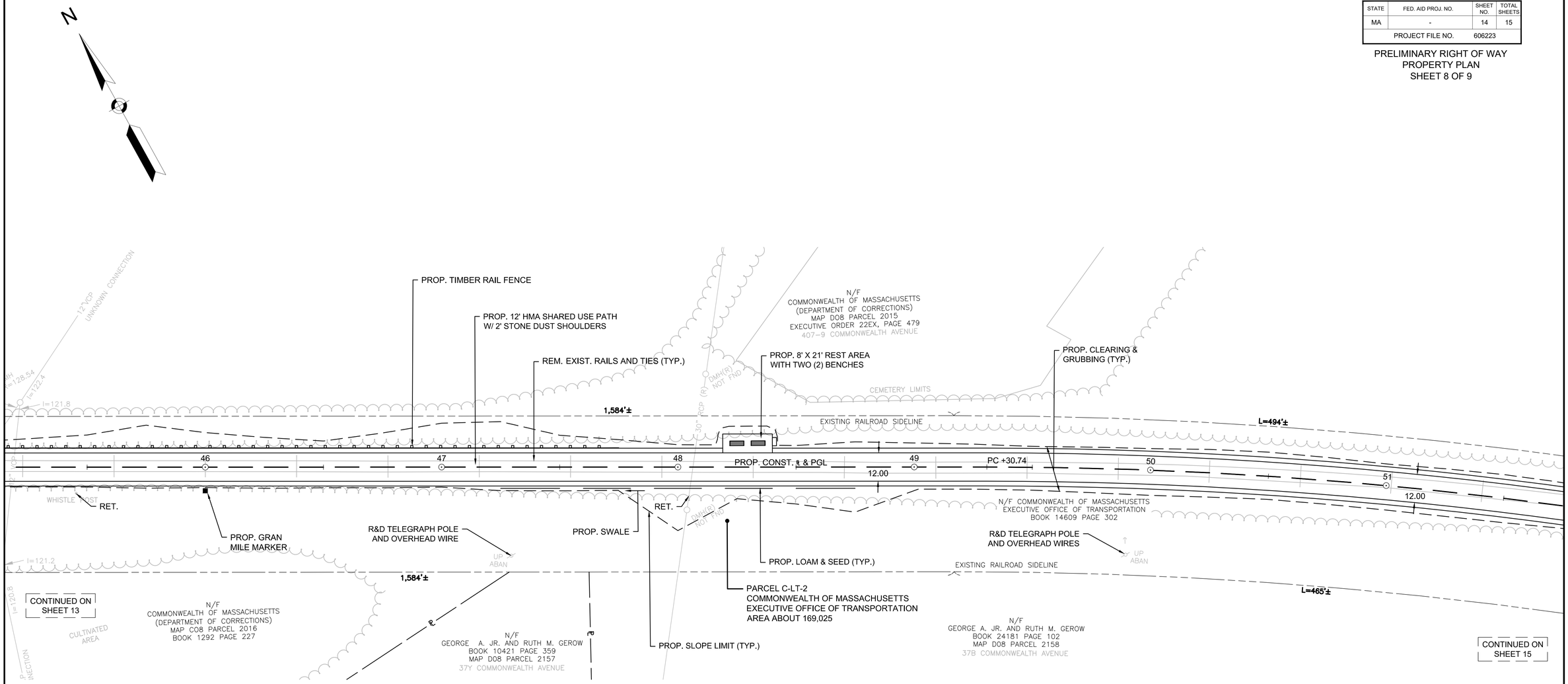

ACTON & CONCORD
BRUCE FREEMAN RAIL PHASE 2B

STATE	FED. AID PROJ. NO.	SHEET NO.	TOTAL SHEETS
MA	-	15	15
PROJECT FILE NO.	606223		

PRELIMINARY RIGHT OF WAY
PROPERTY PLAN
SHEET 9 OF 9

606223_RW9_(PROPERTY PLAN).DWG 27-Jun-2018

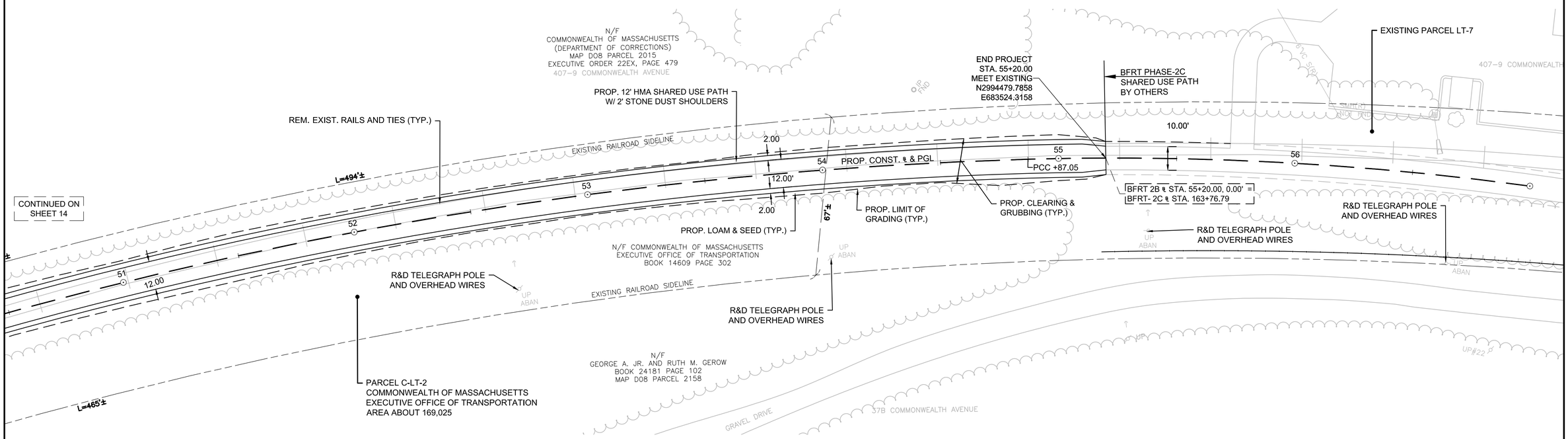

0 20 50 100
SCALE: 1" = 20'