MASSACHUSETTS DEPARTMENT OF TRANSPORTATION
HIGHWAY DIVISION

ACTON & CONCORD
BRUCE FREEMAN RAIL TRAIL PHASE 2B

STATE	FED. AID PROJ. NO.	SHEET NO.	TOTAL SHEETS
MA	-	1	146
PROJECT FILE NO.	606223		

TITLE SHEET & INDEX

PLAN AND PROFILE OF

BRUCE FREEMAN RAIL TRAIL PHASE 2B

(BRIDGE NOs. C-19-039 (BUJ), C-19-040 (BUK) & C-19-037 (BF4))

IN THE TOWNS OF

ACTON & CONCORD

MIDDLESEX COUNTY

THE MASSACHUSETTS HIGHWAY DEPARTMENT STANDARD SPECIFICATIONS FOR HIGHWAYS AND BRIDGES DATED 1988, AS AMENDED, THE SUPPLEMENTAL SPECIFICATIONS DATED JULY 1, 2015, THE OCTOBER 2017 CONSTRUCTION STANDARD DETAILS, THE 2015 OVERHEAD SIGNAL STRUCTURE AND FOUNDATION STANDARD DRAWINGS, MASSDOT TRAFFIC MANAGEMENT PLANS AND DETAIL DRAWINGS, THE LATEST MANUAL ON UNIFORM TRAFFIC CONTROL DEVICES FOR STREETS AND HIGHWAYS WITH MASSACHUSETTS AMENDMENTS, THE 1990 STANDARD DRAWINGS FOR SIGNS AND SUPPORTS, THE 1968 STANDARD DRAWINGS FOR TRAFFIC SIGNALS AND HIGHWAY LIGHTING, AND THE LATEST EDITION OF THE AMERICAN STANDARD FOR NURSERY STOCK, LRFD BRIDGE MANUAL - 2013 EDITION, AASHTO GUIDE FOR THE PLANNING, DESIGN AND OPERATION OF PEDESTRIAN FACILITIES - 1ST EDITION, AND THE GUIDE FOR THE DEVELOPMENT OF BICYCLE FACILITIES - 2012 EDITION , WILL GOVERN.

75% SUBMISSION

INDEX

SHEET NO.	DESCRIPTION
1	TITLE SHEET & INDEX
2	LEGEND & ABBREVIATIONS
3	KEY PLAN & BORING LOCATIONS
4-8	BORING LOGS
9-10	TYPICAL SECTIONS
11-16	CONSTRUCTION BASELINE TIES
17-26	CONSTRUCTION PLANS & PROFILES
27-32	CURB TIE & GRADING PLANS
33-36	TRAFFIC SIGN & PAVEMENT MARKINGS
37	TRAFFIC SIGN SUMMARY SHEET
38-49	CONSTRUCTION STAGING PLANS
50-52	TEMPORARY TRAFFIC CONTROL PLANS
53	MEDIAN CROSSOVER DETAIL
54-66	LANDSCAPE PLANS & DETAILS
67-69	CONSTRUCTION DETAILS
70	CULVERT DETAILS
71-114	BRIDGE PLANS
115-137	CROSS SECTIONS
138-146	CROSS SECTIONS - MEDIAN CROSSOVERS

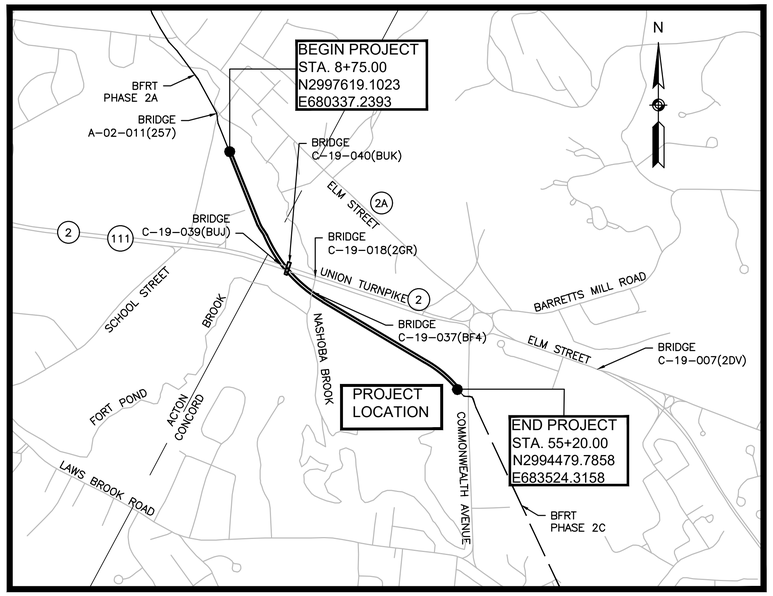

0 1000 2000 3000 4000

SCALE: 1" = 1000'

LENGTH OF PROJECT = 4645 FEET = 0.880 MILES

DESIGN DESIGNATION

DESIGN SPEED	18 MPH
MINIMUM HORIZONTAL CURVE RADIUS	60'
MINIMUM LENGTH OF CREST VERTICAL CURVE	100'
MAXIMUM GRADE FOR LEVEL TERRAIN	4.5%

JUNE 2018

GPI Greenman-Pedersen, Inc.
Engineering & Construction Services
181 Ballardvale Street, Suite 202, Wilmington, MA 01887
Tel: (978) 570-2999 Fax: (978) 658-3044
http://www.gpinet.com

DATE	DESCRIPTION	REV #

massDOT
Massachusetts Department of Transportation
Highway Division

RECOMMENDED FOR APPROVAL

CHIEF ENGINEER DATE

DEPARTMENT OF TRANSPORTATION
FEDERAL HIGHWAY ADMINISTRATION

APPROVED:

DIVISION ADMINISTRATOR DATE

APPROVED

HIGHWAY ADMINISTRATOR DATE

606223_HD_(CS).DWG Plotted on 26-Jun-2018 11:48 AM

ACTON & CONCORD
BRUCE FREEMAN RAIL TRAIL PHASE 2B

STATE	FED. AID PROJ. NO.	SHEET NO.	TOTAL SHEETS
MA	-	2	146
PROJECT FILE NO.	606223		

LEGEND & ABBREVIATIONS

GENERAL SYMBOLS

EXISTING	PROPOSED	DESCRIPTION
JB	JB	JERSEY BARRIER
CB	CB	CATCH BASIN
		LEACHING CATCH BASIN
		CATCH BASIN CURB INLET
FP	FP	FLAG POLE
GP	GP	GAS PUMP
MB	MB	MAIL BOX
		POST SQUARE
		POST CIRCULAR
WELL	WELL	WELL
EHH	EHH	ELECTRIC HANDHOLE
		FENCE GATE POST
GG	GG	GAS GATE
#	#	BORING HOLE
MW #	MW #	MONITORING WELL
TP #	TP #	TEST PIT
		HYDRANT
		LIGHT POLE
CO.BD.		COUNTY BOUND
		GPS POINT
		CABLE MANHOLE
		DRAINAGE MANHOLE
		ELECTRIC MANHOLE
		GAS MANHOLE
		MISC MANHOLE
		SEWER MANHOLE
		TELEPHONE MANHOLE
		WATER MANHOLE
		SIGN AND POST
		SIGN AND POST (2 POSTS)
RRSG	RRSG	RAILROAD SIGNAL
MHB	MHB	MASSACHUSETTS HIGHWAY BOUND
MON		MONUMENT
SB		STONE BOUND
TB		TOWN OR CITY BOUND
		TRAVERSE OR TRIANGULATION STATION
TPL or GUY	TPL or GUY	TROLLEY POLE OR GUY POLE
HTP		TRANSMISSION POLE
UFB	UFB	UTILITY POLE W/ FIREBOX
UPDL	UPDL	UTILITY POLE WITH DOUBLE LIGHT
ULT	ULT	UTILITY POLE W / 1 LIGHT
UPL	UPL	UTILITY POLE
		BUSH
SIZE & TYPE		TREE
		STUMP
		SWAMP / MARSH
WG	WG	WATER GATE
PM	PM	PARKING METER
		OVERHEAD CABLE/WIRE
		CURBING
100 99		CONTOURS (ON-THE-GROUND SURVEY DATA)
100 99		CONTOURS (PHOTOGRAMMETRIC DATA)
		UNDERGROUND DRAIN PIPE (DOUBLE LINE 24 INCH AND OVER)
		UNDERGROUND ELECTRIC DUCT (DOUBLE LINE 24 INCH AND OVER)
		UNDERGROUND GAS MAIN (DOUBLE LINE 24 INCH AND OVER)
		UNDERGROUND SEWER MAIN (DOUBLE LINE 24 INCH AND OVER)
		UNDERGROUND TELEPHONE DUCT (DOUBLE LINE 24 INCH AND OVER)
		UNDERGROUND WATER MAIN (DOUBLE LINE 24 INCH AND OVER)
		BALANCED STONE WALL
		GUARD RAIL - STEEL POSTS
		GUARD RAIL - WOOD POSTS
		CHAIN LINK OR METAL FENCE
		WOOD FENCE
		HAY BALES/SILT FENCE
		TREE LINE
		SAWCUT LINE
		TOP OR BOTTOM OF SLOPE
		LIMIT OF EDGE OF PAVEMENT OR COLD PLANE AND OVERLAY
		BANK OF RIVER OR STREAM
		BORDER OF WETLAND
		100 FT WETLAND BUFFER
		200 FT RIVERFRONT BUFFER
		STATE HIGHWAY LAYOUT
		TOWN OR CITY LAYOUT
		COUNTY LAYOUT
		RAILROAD SIDELINE
		TOWN OR CITY BOUNDARY LINE
		PROPERTY LINE OR APPROXIMATE PROPERTY LINE
		EASEMENT

PAVEMENT MARKINGS SYMBOLS

EXISTING	PROPOSED	DESCRIPTION
		PAVEMENT ARROW - WHITE
ONLY	ONLY	LEGEND "ONLY" - WHITE
	SL	STOP LINE
	CW	CROSSWALK
	SWL	SOLID WHITE LINE
	SYL	SOLID YELLOW LINE
	BWL	BROKEN WHITE LINE
	BYL	BROKEN YELLOW LINE
	DWL	DOTTED WHITE LINE
	DYL	DOTTED YELLOW LINE
	DWLEx	DOTTED WHITE LINE EXTENSION
	DYLEx	DOTTED YELLOW LINE EXTENSION
	DBWL	DOUBLE WHITE LINE
	DBYL	DOUBLE YELLOW LINE

GENERAL NOTES

1. TOPOGRAPHICAL INFORMATION WAS PROVIDED BY SURVEYING AND MAPPING CONSULTANTS, JUNE 2008. VERTICAL DATUM IS BASED ON NAVD88. HORIZONTAL DATUM IS BASED ON NAD83.
2. THE LOCATIONS OF EXISTING UNDERGROUND UTILITIES ARE SHOWN IN AN APPROXIMATE WAY ONLY AND HAVE NOT BEEN INDEPENDENTLY VERIFIED BY THE OWNER OR ITS REPRESENTATIVE. THE CONTRACTOR SHALL DETERMINE THE EXACT LOCATION OF ALL EXISTING UTILITIES BEFORE COMMENCING WORK, AND AGREES TO BE FULLY RESPONSIBLE FOR ANY AND ALL DAMAGES WHICH MIGHT BE OCCASIONED BY THE CONTRACTOR'S FAILURE TO LOCATE EXACTLY AND TO PRESERVE ANY AND ALL UNDERGROUND UTILITIES. CALL "DIG-SAFE" 1-888-DIGSAFE (344-7233) AT LEAST 72 HOURS BEFORE COMMENCING CONSTRUCTION.
3. WHERE AN EXISTING UNDERGROUND UTILITY IS FOUND TO CONFLICT WITH THE PROPOSED WORK, THE LOCATION, ELEVATION AND SIZE OF THE UTILITY SHALL BE ACCURATELY DETERMINED WITHOUT DELAY BY THE CONTRACTOR, AND THE INFORMATION FURNISHED TO THE ENGINEER FOR RESOLUTION OF THE CONFLICT.
4. THE CONTRACTOR SHALL MAKE ALL ARRANGEMENTS FOR THE ALTERATION AND ADJUSTMENT OF GAS, ELECTRIC, TELEPHONE AND ANY OTHER PRIVATE UTILITIES BY THE UTILITY COMPANIES.
5. AREAS OUTSIDE THE LIMITS OF PROPOSED WORK DISTURBED BY THE CONTRACTOR'S OPERATIONS SHALL BE RESTORED BY THE CONTRACTOR TO THEIR ORIGINAL CONDITION AT THE CONTRACTOR'S EXPENSE.
6. THE TERM "PROPOSED" (PROP.) MEANS WORK TO BE CONSTRUCTED USING NEW MATERIALS, OR, WHERE APPLICABLE, RE-USING EXISTING MATERIALS IDENTIFIED AS "REMOVE & RESET" (R&R).
7. ALL EXISTING STATE, COUNTY, CITY AND TOWN LOCATION LINES AND PRIVATE PROPERTY LINES HAVE BEEN ESTABLISHED FROM AVAILABLE INFORMATION AND THEIR EXACT LOCATIONS ARE NOT GUARANTEED.
8. ALL JOINTS BETWEEN NEW SURFACE PAVEMENT AND EXISTING SURFACE PAVEMENT TO REMAIN SHALL BE COATED WITH A HOT MIX ASPHALT JOINT SEALANT MEETING SPECIAL PROVISION ITEM 453.
9. ALL DISTURBED AREAS NOT DESIGNATED TO BE PAVED SHALL HAVE COMPOST TOPSOIL PLACED AND SEEDED. THE COMPOST TOPSOIL SHALL HAVE A MINIMUM DEPTH OF 4 INCHES AND SHALL BE PLACED FLUSH WITH THE TOP OF THE ADJACENT CURB, EDGING, BERM OR PAVEMENT SURFACE.
10. THE LIMIT OF WORK AREA SHALL BE THE RIGHT OF WAY UNLESS SHOWN OTHERWISE.
11. PRIOR TO THE START OF ANY NEW UTILITY WORK, ALL ELEVATIONS OF EXISTING UTILITIES IN THOSE AREAS ARE TO BE VERIFIED. THE ENGINEER IS TO BE NOTIFIED IMMEDIATELY SHOULD ANY DISCREPANCIES OCCUR.
12. ALL CASTINGS SHALL BE SET FLUSH WITH FINISHED GRADE.
13. ALL PUBLICLY OWNED GATE BOXES, SERVICE BOXES, MANHOLE FRAMES AND COVERS SHALL BE ADJUSTED TO GRADE BY THE CONTRACTOR.
14. ALL NEW SIDEWALKS AND DRIVEWAY GRADES SHALL MATCH EXISTING GRADES AT BACK OF SIDEWALK LINE UNLESS SHOWN OTHERWISE ON THE PLANS AND CROSS-SECTIONS.
15. THE CONTRACTOR SHALL TAKE EVERY PRECAUTION TO PROTECT ALL EXISTING TREES AND ROOTS THAT ARE NOT DESIGNATED FOR REMOVAL.
16. CONTRACTOR TO CONTACT ENGINEER PRIOR TO INSTALLATION OF BOUNDS FOR FINAL LOCATIONS.
17. DRAINAGE ELEVATIONS ARE PROVIDED FOR DESIGN PURPOSES ONLY. THE CONTRACTOR SHALL VERIFY BY TEST PIT, THE LOCATIONS OF EXISTING UTILITIES WHICH MAY CONFLICT WITH THE PROPOSED DRAINAGE DESIGN. ANY FIELD ADJUSTMENTS REQUIRED WILL BE MADE AS APPROVED OR DIRECTED BY THE ENGINEER. ONLY AFTER THE CONTRACTOR VERIFIES ELEVATIONS FOR THE CONSTRUCTABILITY OF THE DRAINAGE SYSTEM SHALL ANY STRUCTURES BE ORDERED. ANY FIELD ADJUSTMENTS TO LINE & GRADE UP TO A DEPTH OF 5 FEET SHALL BE INCLUDED IN THE COST OF THE PIPE. PIPE EXCAVATION GREATER THAN 5 FEET WILL BE PAID UNDER CLASS B TRENCH EXCAVATION.
18. CONTRACTOR SHALL REMOVE EXISTING ORGANIC MATERIAL THAT IS UNSUITABLE FOR REUSE AND DISPOSE OF OUTSIDE OF THE PROJECT LIMITS. IT IS ASSUMED THAT ALL OTHER EXCAVATED SUITABLE MATERIAL WILL REMAIN WITHIN THE PROJECT LIMITS. SEE SPECIAL PROVISIONS FOR DETAILS.
19. THE CONTRACTOR SHALL COMPLY WITH ALL REQUIREMENTS OF THE MASSACHUSETTS BAY TRANSPORTATION AUTHORITY'S RAILROAD OPERATIONS DIRECTORATE "GUIDELINES AND PROCEDURES FOR CONSTRUCTION ON MBTA RAILROAD PROPERTY". SUCH COMPLIANCE SHALL INCLUDE BUT NOT BE LIMITED TO ISSUANCE OF RAILROAD PROTECTIVE INSURANCE, SAFETY TRAINING AND RECEIPT/CONFORMANCE WITH STIPULATION IN PERMITS/LICENSE AGREEMENTS FOR ANY WORK PROPOSED ON MBTA PROPERTY.

ABBREVIATIONS

GENERAL

AADT	ANNUAL AVERAGE DAILY TRAFFIC
ABAN	ABANDON
ADJ	ADJUST
APPROX.	APPROXIMATE
A.C.	ASPHALT CONCRETE
ACCM PIPE	ASPHALT COATED CORRUGATED METAL PIPE
BIT.	BITUMINOUS
BC	BOTTOM OF CURB
BD.	BOUND
BL	BASELINE
BLDG	BUILDING
BM	BENCHMARK
BO	BY OTHERS
BOS	BOTTOM OF SLOPE
BR.	BRIDGE
CB	CATCH BASIN
CBCI	CATCH BASIN WITH CURB INLET
CC	CEMENT CONCRETE
CCM	CEMENT CONCRETE MASONRY
CEM	CEMENT
CI	CURB INLET
CIP	CAST IRON PIPE
CLF	CHAIN LINK FENCE
CL	CENTERLINE
CMP	CORRUGATED METAL PIPE
CSP	CORRUGATED STEEL PIPE
CO.	COUNTY
CONC	CONCRETE
CONT	CONTINUOUS
CONST	CONSTRUCTION
CR GR	CROWN GRADE
DHV	DESIGN HOURLY VOLUME
DI	DROP INLET
DIA	DIAMETER
DIP	DUCTILE IRON PIPE
DW	STEADY DON'T WALK - PORTLAND ORANGE
DWY	DRIVEWAY
ELEV (or EL.)	ELEVATION
EMB	EMBANKMENT
EOP	EDGE OF PAVEMENT
EXIST (or EX)	EXISTING
EXC	EXCAVATION
F&C	FRAME AND COVER
F&G	FRAME AND GRATE
FDN.	FOUNDATION
FLDSTN	FIELDSTONE
FND	FOUND
GAR	GARAGE

ABBREVIATIONS (cont.)

GENERAL

GD	GROUND
GG	GAS GATE
GI	GUTTER INLET
GIP	GALVANIZED IRON PIPE
GRAN	GRANITE
GRAV	GRAVEL
GRD	GUARD
HDW	HEADWALL
HMA	HOT MIX ASPHALT
HOR	HORIZONTAL
HYD	HYDRANT
INV	INVERT
JCT	JUNCTION
L	LENGTH OF CURVE
LB	LEACH BASIN
LP	LIGHT POLE
LT	LEFT
MAG	MAGNETIC
MAX	MAXIMUM
MB	MAILBOX
MH	MANHOLE
MHB	MASSACHUSETTS HIGHWAY BOUND
MIN	MINIMUM
NIC	NOT IN CONTRACT
NO.	NUMBER
PC	POINT OF CURVATURE
PCC	POINT OF COMPOUND CURVATURE
P.G.L.	PROFILE GRADE LINE
PI	POINT OF INTERSECTION
POC	POINT ON CURVE
POT	POINT ON TANGENT
PRC	POINT OF REVERSE CURVATURE
PROJ	PROJECT
PROP	PROPOSED
PSB	PLANTABLE SOIL BORROW
PT	POINT OF TANGENCY
PVC	POINT OF VERTICAL CURVATURE
PVI	POINT OF VERTICAL INTERSECTION
PVT	POINT OF VERTICAL TANGENCY

ABBREVIATIONS (cont.)

GENERAL

PVMT	PAVEMENT
PWW	PAVED WATER WAY
R	RADIUS OF CURVATURE
R&D	REMOVE AND DISPOSE
RCP	REINFORCED CONCRETE PIPE
RD	ROAD
RDWY	ROADWAY
REM	REMOVE
RET	RETAIN
RET WALL	RETAINING WALL
ROW	RIGHT OF WAY
RR	RAILROAD
R&R	REMOVE AND RESET
R&S	REMOVE AND STACK
RT	RIGHT
SB	STONE BOUND
SHLD	SHOULDER
SHLO	STATE HIGHWAY LAYOUT LINE
SMH	SEWER MANHOLE
SSD	STOPPING SIGHT DISTANCE
SSM	STATE SURVEY MARK
ST	STREET
STA	STATION
SW	SIDEWALK
T	TANGENT DISTANCE OF CURVE/TRUCK %
TAN	TANGENT
TEMP	TEMPORARY
TC	TOP OF CURB
TOS	TOP OF SLOPE
TYP	TYPICAL
UP	UTILITY POLE
VAR	VARIES
VERT	VERTICAL
VC	VERTICAL CURVE
WCR	WHEEL CHAIR RAMP
WG	WATER GATE
WIP	WROUGHT IRON PIPE
WM	WATER METER/WATER MAIN
X-SECT	CROSS SECTION

TRAFFIC SIGNAL

CAB.	CABINET
CCVE	CLOSED CIRCUIT VIDEO EQUIPMENT
DW	STEADY DON'T WALK
FDW	FLASHING DON'T WALK
FR	FLASHING CIRCULAR RED
FRL	FLASHING RED LEFT ARROW
FRR	FLASHING RED RIGHT ARROW
FY	FLASHING CIRCULAR AMBER
FYL	FLASHING AMBER LEFT ARROW
FYR	FLASHING AMBER RIGHT ARROW
G	STEADY CIRCULAR GREEN
GL	STEADY GREEN LEFT ARROW
GR	STEADY GREEN RIGHT ARROW
GSL	STEADY GREEN SLASH LEFT ARROW
GSR	STEADY GREEN SLASH RIGHT ARROW
GV	STEADY GREEN VERTICAL ARROW
OL	OVERLAP
PED	PEDESTRIAN
PTZ	PAN, TILE, ZOOM
R	STEADY CIRCULAR RED
RL	STEADY RED LEFT ARROW
RR	STEADY RED RIGHT ARROW
TR SIG	TRAFFIC SIGNAL
TSC	TRAFFIC SIGNAL CONDUIT
W	STEADY WALK
Y	STEADY CIRCULAR AMBER
YL	STEADY AMBER LEFT ARROW

606223_HD_(LE).DWG Plotted on 26-Jun-2018 11:48 AM

ACTON & CONCORD
BRUCE FREEMAN RAIL TRAIL PHASE 2B

STATE	FED. AID PROJ. NO.	SHEET NO.	TOTAL SHEETS
MA	-	3	146
PROJECT FILE NO.	606223		

KEY PLAN & BORING LOCATIONS

SHEET REFERENCE:	1	2	3	4	5	6	7	8	9	10
Drawing Title:	Drawing Number:									
CONSTRUCTION BASELINE TIES	11	11	12	13	14	14	15	15	16	
CONSTRUCTION PLANS & PROFILES	17	18	19	20	22	23	24	25	26	21
CURB TIE & GRADING PLANS	27	27	28	29	30	30	31	31	32	
TRAFFIC SIGN & PAVEMENT MARKINGS				34	35	35				
LANDSCAPING PLANS	54	55	56	57	58	59	60	61	62	

B-# = BORING LOCATION AND NUMBER

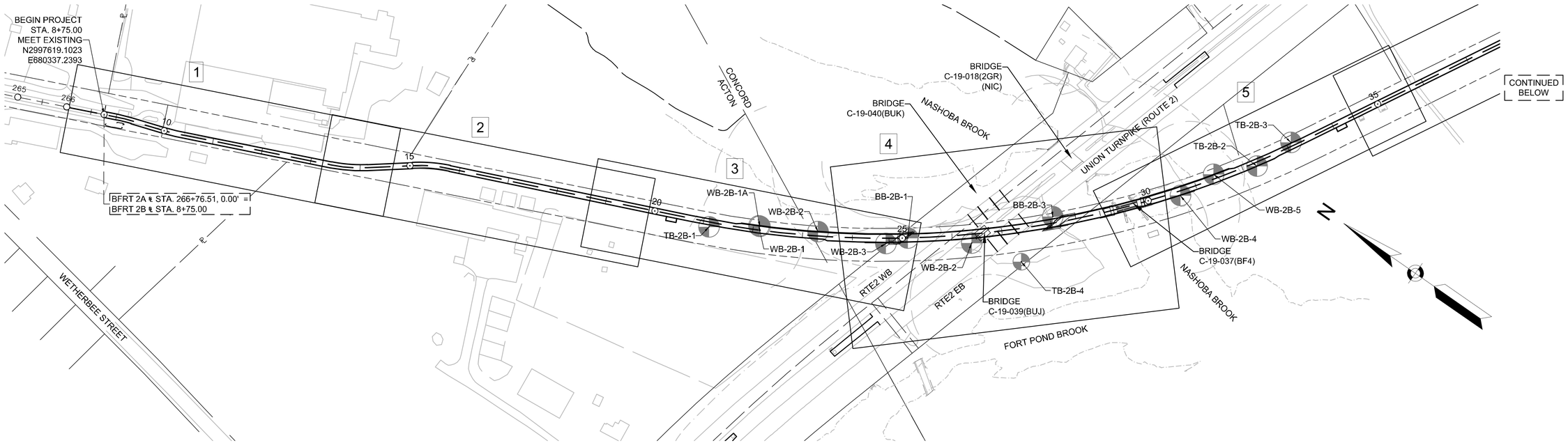

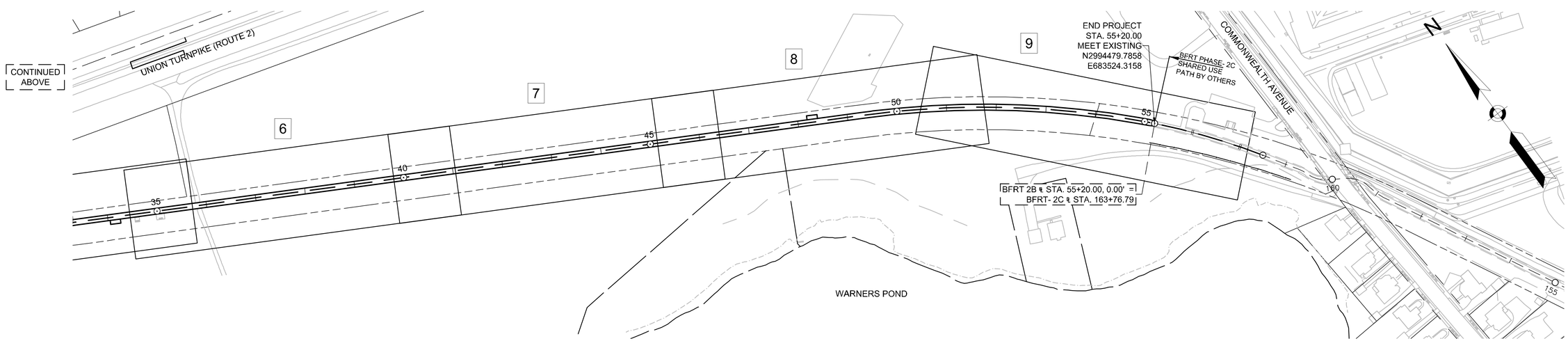

606223_HD_(KEY).DWG Plotted on 26-Jun-2018 11:49 AM

ACTON & CONCORD
BRUCE FREEMAN RAIL TRAIL PHASE 2B

STATE	FED. AID PROJ. NO.	SHEET NO.	TOTAL SHEETS
MA	-	4	146
PROJECT FILE NO.	606223		

BORING LOGS

Boring No. BB-2B-1

massDOT Highway

NEW HAMPSHIRE BORING, INC.
P.O. Box 165
Derry, NH 03038

Phone: (603)437-1610
Fax: (603) 437-0034
E Mail: nhb@nhboring.com

Scale 1" = 5'

City/Town: Acton Concord | Bridge: Bruce Freeman Rail Trail (Phase II-B) | Project File No: 606223 | Contract No: 76859

Project: Bruce Freeman Rail Trail Route 2 (Phase II-B) | Date & Time Started: 11-12-14 2:00 pm | Total Hours: 12.5

Groundwater Depth: 9' | Date & Time: 11-13-14 7:25 am | Date & Time Completed: 11-14-14 11:00 am

Coordinates: N 2996155 E 681053 | Driller's Name: Manlea Thompson | Helper's Name: Donald Palmer

Ground Elevation: 129.5 | Inspector's Name: Weijie Dong | Inspector's Company: Lamson Engineering, Corp., for *

Sample Number	Depth Range (Feet)	Blow Counts per 6 Inches Coring Times Minute Per Foot	Recovery Inches	Field Description	Strata Changes
S-1	0' - 2'	2 3 5 3	14"	Dry, loose, brown, FINE TO COARSE SAND, some inorganic silt.	
S-2	5' - 7'	7 9 14 16	13"	Dry, medium dense, brown, FINE SAND, some coarse sand, trace inorganic silt.	
S-3	10' - 12'	8 13 15 16	10"	Wet, medium dense, brown, FINE TO COARSE SAND, some fine to medium gravel, trace inorganic silt.	13'6"
S-4	15' - 16'	7 9 11 11	5"	Wet, medium dense, brown-red, FINE SAND and inorganic silt.	16'
S-4A	16' - 17'		4"	Wet, medium dense, gray, FINE SAND, trace inorganic silt.	
S-5	20' - 22'	3 3 5 5	17"	Wet, loose, gray, FINE SAND, some inorganic silt, trace clay.	25'
S-6	25' - 26'	2 4 4 4	8"	Wet, loose, brown, FINE SAND, some inorganic silt.	26'
S-6A	26' - 27'		8"	Wet, loose, gray, FINE SAND, some inorganic silt, trace clay.	28'6"
S-7	30' - 32'	21 22 24 15	12"	Wet, dense, gray, FINE TO COARSE SAND and fine to medium gravel, trace inorganic silt. Top of possible BEDROCK at 33'	33'
C-1	34' - 39'	4 2 2 3 2	48"	Advanced rollerbit to 34' and began coring. Hard very weathered, moderately fractured GRANITE. Percent Recovery = 80%	
C-2	39' - 44'	2 1 1 1 1	0"	No recovery, very weathered GRANITE. Rollerbit to 45', telescoped 3" casing to sample.	
S-8	45' - 45'11"	34 86/5"	9"	Moist, very dense, gray, possible weathered BEDROCK.	
S-9	50' - 50'2"	120/2"	2"	Moist, very dense, brown, FINE TO MEDIUM GRAVEL, trace inorganic silt (weathered possible bedrock) Advanced rollerbit to 55'	
				Terminated boring at 55'	55'
				Bottom of Exploration = 55'	

Remarks: * AECOM (Consultants)
Boring terminated due to not being able to advanced corebarrell down the hole.
Boring terminated without coring another 5 foot run to compensate for the no recovery obtained from C-2; enough information was obtained for the design engineer. Installed monitoring well at 20'

Protective Device - Stand: Box:
Well Depth: 20' Solid Pipe: 13'
Stick Up Pipe: 3' Screen Pipe: 10'

Penetration Resistance (N) Guide:

Cohesionless Soils (Sands, Gravels)		Cohesive Soils (Silts, Clays)	
Relative Density	Penetration Resistance	Consistency	Penetration Resistance
Very Loose	0 - 4	Very Soft	0 - 2
Loose	4 - 10	Soft	2 - 4
Medium Dense	10 - 30	Medium Stiff	4 - 8
Dense	30 - 50	Stiff	8 - 15
Very Dense	Over 50	Very Stiff	15 - 30
N=Sum of Second and Third 6" Blow Counts		Hard	Over 30

Terms Used for Second Entry of Descriptions: and = 40-50%, some = 10-40%, trace = 10% or less

Type of Drill Rig: CME 550X
Arrow-Board: Signs: Cones:
Casing: HW Size: 4" Amt: 39'
Casing: NW Size: 3" Amt: 45'
Hammer Weight: 300 lbs. Fall: 30"
Sampler Type: S/S Size: 1 3/8"
Automatic Hammer Weight:
Safety Hammer Weight: 140 lbs.
Donut Hammer Weight: Fall: 30"
Core Barrel Type: NX Size: 2.15"

Boring No. BB-2B-2

massDOT Highway

NEW HAMPSHIRE BORING, INC.
P.O. Box 165
Derry, NH 03038

Phone: (603)437-1610
Fax: (603) 437-0034
E Mail: nhb@nhboring.com

Scale 1" = 5'

City/Town: Acton Concord | Bridge: Bruce Freeman Rail Trail (Phase II-B) | Project File No: 606223 | Contract No: 76859

Project: Bruce Freeman Rail Trail Route 2 (Phase II-B) | Date & Time Started: 11-25-14 7:30 am | Total Hours: 7

Groundwater Depth: 8' | Date & Time: 11-25-14 2:15 am | Date & Time Completed: 11-25-14 2:30 pm

Coordinates: N 2996044 E 681118 | Driller's Name: Manlea Thompson | Helper's Name: Donald Palmer

Ground Elevation: 129.7 | Inspector's Name: Weijie Dong | Inspector's Company: Lamson Engineering, Corp. for *

Sample Number	Depth Range (Feet)	Blow Counts per 6 Inches Coring Times Minute Per Foot	Recovery Inches	Field Description	Strata Changes
				TOPSOIL 3"	
S-1	0' - 2'	2 5 6 6	10"	Dry, medium dense, brown, FINE TO COARSE SAND, trace fine to medium gravel, trace inorganic silt.	
S-2	5' - 7'	3 3 5 7	8"	Moist, loose, dense, brown FINE TO COARSE SAND, trace fine gravel, trace inorganic silt.	
S-3	10' - 12'	5 7 6 7	14"	Wet, medium dense, brown, FINE TO COARSE SAND, trace fine gravel, trace inorganic silt.	
S-4	15' - 17'	7 10 9 10	11"	Wet, medium dense, gray, FINE TO COARSE SAND, trace fine to medium gravel, trace inorganic silt.	19'
S-5	20' - 22'	9 11 13 16	15"	Wet, medium dense, brown, FINE TO COARSE SAND and fine to medium gravel, some inorganic silt.	23'
S-6	25' - 26'	5 6 5 5	7"	Wet, medium dense, brown, FINE SAND and inorganic silt.	26'
S-6A	26' - 27'		7"	Wet, loose, gray, FINE SAND and inorganic silt.	30'
S-7	30' - 32'	10 10 16 19	6"	Wet, medium dense, gray, COARSE TO FINE SAND and fine to medium gravel, trace inorganic silt.	32'6"
S-8	35' - 36'4"	42 55 65/4"	16"	Wet, very dense, gray, FINE TO COARSE SAND, some fine to medium gravel, some inorganic silt (Till.)	
S-9	40' - 41'3"	37 67 53/3"	12"	Wet, very dense, gray, FINE TO COARSE SAND, some fine to medium gravel, some inorganic silt (Till.)	
S-10	45' - 46'4"	28 40 80/4"	15"	Wet, very dense, gray, FINE TO COARSE SAND, some fine to medium gravel, some inorganic silt (Till.)	46'4"
S-11	50' - 50'2"	120/2"	0"	No Recovery	
S-12	55' - 55'8"	86 34/2"	4"	Wet, very dense, brown-white INORGANIC SILT and fine sand, some fine gravel, trace weathered bedrock.	
S-13	60' - 60'3"	120/3"	2"	Wet, very dense, brown-gray, weathered BEDROCK.	
S-14	65' - 65'4"	120/4"	3"	Wet, very dense, brown-gray weathered BEDROCK.	65'4"
				Bottom of Exploration = 65'4"	

Remarks: * AECOM (Consultants)

Protective Device - Stand: Box:
Well Depth: Solid Pipe:
Stick Up Pipe: Screen Pipe:

Penetration Resistance (N) Guide:

Cohesionless Soils (Sands, Gravels)		Cohesive Soils (Silts, Clays)	
Relative Density	Penetration Resistance	Consistency	Penetration Resistance
Very Loose	0 - 4	Very Soft	0 - 2
Loose	4 - 10	Soft	2 - 4
Medium Dense	10 - 30	Medium Stiff	4 - 8
Dense	30 - 50	Stiff	8 - 15
Very Dense	Over 50	Very Stiff	15 - 30
N=Sum of Second and Third 6" Blow Counts		Hard	Over 30

Terms Used for Second Entry of Descriptions: and = 40-50%, some = 10-40%, trace = 10% or less

Type of Drill Rig: CME 550X
Arrow-Board: Signs: 2 Cones: 20
Casing: HW Size: 4" Amt: 65'
Hammer Weight: 300 lbs. Fall: 30"
Sampler Type: S/S Size: 1 3/8"
Automatic Hammer Weight:
Safety Hammer Weight: 140 lbs.
Donut Hammer Weight: Fall: 30"
Core Barrel Type: Size:

Boring No. BB-2B-3

massDOT Highway

NEW HAMPSHIRE BORING, INC.
P.O. Box 165
Derry, NH 03038

Phone: (603)437-1610
Fax: (603) 437-0034
E Mail: nhb@nhboring.com

Scale 1" = 5'

City/Town: Acton Concord | Bridge: Bruce Freeman Rail Trail (Phase II-B) | Project File No: 606223 | Contract No: 76859

Project: Bruce Freeman Rail Trail Route 2 (Phase II-B) | Date & Time Started: 11-17-14 8:00 am | Total Hours: 10.5

Groundwater Depth: 7' | Date & Time: 11-18-14 11:00 am | Date & Time Completed: 11-18-14 12:00 pm

Coordinates: N 2995941 E 681254 | Driller's Name: Manlea Thompson | Helper's Name: Donald Palmer

Ground Elevation: 128.5 | Inspector's Name: Weijie Dong | Inspector's Company: Lamson Engineering, Corp., for *

Sample Number	Depth Range (Feet)	Blow Counts per 6 Inches Coring Times Minute Per Foot	Recovery Inches	Field Description	Strata Changes
S-1	0' - 2'	3 3 3 2	12"	Moist, loose, black, FINE TO COARSE SAND, some inorganic silt, trace fine to medium gravel.	3'6"
S-2	5' - 7'	4 6 6 8	17"	Moist, medium dense, brown COARSE TO FINE SAND, trace inorganic silt.	
S-3	10' - 12'	5 6 8 8	19"	Wet, medium dense, brown, COARSE TO FINE SAND, trace fine gravel, trace inorganic silt.	
S-4	15' - 17'	8 9 12 13	17"	Wet, medium dense, brown FINE TO COARSE SAND, trace fine gravel, trace inorganic silt.	
S-5	20' - 22'	12 10 9 10	10"	Wet, medium dense, gray FINE TO COARSE SAND, some fine to medium gravel, trace inorganic silt.	
S-6	25' - 27'	6 8 10 12	4"	Wet, medium dense, gray-brown, FINE TO COARSE SAND and fine to medium gravel, trace inorganic silt.	
S-7	30' - 32'	10 9 10 10	13"	Wet, medium dense, gray, FINE TO COARSE SAND, some inorganic silt, trace fine gravel. Top of weathered BEDROCK at 33'	33'
S-8	35' - 35'3"	120/3"	2"	Advanced casing and roller bit through weathered bedrock to 35'. Moist, very dense, gray FINE TO COARSE SAND and fine to coarse gravel, trace inorganic silt (weathered bedrock). Roller bit through weathered bedrock and began coring.	
C-1	38' - 43'	5 5 4 4 5	60"	Hard, fresh, sound, gray GRANITE. Percent Recovery = 100%	
C-2	43' - 48'	4 5 5 4 5	60"	Hard, fresh, sound, gray GRANITE. Percent Recovery = 100%	48'
				Bottom of Exploration = 48'	

Remarks: * AECOM (Consultants)
Set monitoring well at 17'

Protective Device - Stand: Box:
Well Depth: 17' Solid Pipe: 10'
Stick Up Pipe: 3' Screen Pipe: 10'

Penetration Resistance (N) Guide:

Cohesionless Soils (Sands, Gravels)		Cohesive Soils (Silts, Clays)	
Relative Density	Penetration Resistance	Consistency	Penetration Resistance
Very Loose	0 - 4	Very Soft	0 - 2
Loose	4 - 10	Soft	2 - 4
Medium Dense	10 - 30	Medium Stiff	4 - 8
Dense	30 - 50	Stiff	8 - 15
Very Dense	Over 50	Very Stiff	15 - 30
N=Sum of Second and Third 6" Blow Counts		Hard	Over 30

Terms Used for Second Entry of Descriptions: and = 40-50%, some = 10-40%, trace = 10% or less

Type of Drill Rig: CME 550X
Arrow-Board: Signs: Cones:
Casing: PW Size: 5" Amt: 34'
Hammer Weight: 300 lbs. Fall: 30"
Sampler Type: S/S Size: 1 3/8"
Automatic Hammer Weight:
Safety Hammer Weight: 140 lbs.
Donut Hammer Weight: Fall: 30"
Core Barrel Type: NX Size: 2.15"

5 0 5 10
HORIZONTAL
SCALE IN FEET

606223_HD_(BL).DWG Plotted on 26-Jun-2018 11:49 AM

ACTON & CONCORD
BRUCE FREEMAN RAIL TRAIL PHASE 2B

STATE	FED. AID PROJ. NO.	SHEET NO.	TOTAL SHEETS
MA	-	5	146
PROJECT FILE NO.	606223		

BORING LOGS

Boring No. TB-2B-1

massDOT Massachusetts Highway

NEW HAMPSHIRE BORING, INC.
P.O. Box 165
Derry, NH 03038

Phone: (603)437-1610
Fax: (603) 437-0034
E Mail: nhb@nhboring.com

Scale 1" = 5'

City/Town: Acton - Concord | Bridge: Bruce Freeman Rail Trail (Phase II-B) | Project File No: 606223 | Contract No: 76859

Project: Bruce Freeman Rail Trail Route 2 (Phase II-B) | Date & Time Started: 11-10-14 2:30 pm | Total Hours: 7.5

Groundwater Depth: 8'4" | Date & Time: 11-11-14 2:00 pm | Date & Time Completed: 11-11-14 2:00 pm

Coordinates: N 2996495 E 680844 | Driller's Name: Manlea Thompson | Helper's Name: Donald Palmer

Ground Elevation: 131.0 | Inspector's Name: Weijie Dong | Inspector's Company: Lamson Engineering, Corp., for *

Sample Number	Depth Range (Feet)	Blow Counts per 6 Inches Coring Times Minute Per Foot	Recovery Inches	Field Description	Strata Changes
S-1	0' - 2'	2 6 8 13	12"	Dry, medium dense, brown, FINE TO COARSE SAND and fine to medium gravel, trace inorganic silt.	5'
S-2	5' - 7'	11 11 7 8	9"	Moist, medium dense, brown, FINE SAND, some inorganic silt.	10'
S-3	10' - 12'	3 3 4 4	15"	Wet, loose, brown, FINE SAND and inorganic silt, trace clay.	
S-4	15' - 16'	5 6 7 6	8"	Moist, medium dense, red/brown, FINE SAN D, trace inorganic silt.	16'
S-4A	16' - 17		8"	Moist, medium dense, gray, FINE SAND, trace inorganic silt.	
S-5	20' - 22'	3 4 4 3	14"	Wet, loose, gray FINE SAND, some inorganic silt, trace clay.	23'
S-6	25' - 27'	11 10 13 15	9"	Wet, medium dense, gray, FINE TO COARSE SAND, trace inorganic silt, trace fine gravel. Top of BEDROCK at 27'6"	27'6"
C-1	29' - 34'	5 5 3 4 4	60"	Advanced rollerbit to 29' through granite and began coring. Hard, fresh, sound, gray GRANITE. Percent Recovery = 100%	
C-2	34' - 36'	5 6 *	12"	Hard, severely fractured, gray GRANITE. Percent Recovery = 50%	36'
				Bottom of Exploration = 36'	

Remarks: * AECOM (Consultants)
* Had to terminate boring at 36' due to the carbide buttons from rollerbit burning out down in the hole at the diamond bit, corebarrell would not advance past 36', steel pieces in core barrell. Boring terminated with a 7' bedrock core and enough information obtained for the design engineer.

Protective Device - Stand: Box:
Well Depth: Solid Pipe:
Stick Up Pipe: Screen Pipe:

Penetration Resistance (N) Guide:

Cohesionless Soils (Sands, Gravels)		Cohesive Soils (Silts, Clays)	
Relative Density	Penetration Resistance	Consistency	Penetration Resistance
Very Loose	0 - 4	Very Soft	0 - 2
Loose	4 - 10	Soft	2 - 4
Medium Dense	10 - 30	Medium Stiff	4 - 8
Dense	30 - 50	Stiff	8 - 15
Very Dense	Over 50	Very Stiff	15 - 30
N=Sum of Second and Third 6" Blow Counts		Hard	Over 30

Terms Used for Second Entry of Descriptions: and = 40-50%, some = 10-40%, trace = 10% or less

Type of Drill Rig: CME 550X
Arrow-Board: Signs: Cones:
Casing: HW Size: 4" Amt: 29'
Hammer Weight: 300 lbs. Fall: 30"
Sampler Type: S/S Size: 1 3/8"
Automatic Hammer Weight:
Safety Hammer Weight: 140 lbs.
Donut Hammer Weight: Fall: 30"
Core Barrel Type: NX Size: 2.15"

Boring No. TB-2B-2

massDOT Massachusetts Highway

NEW HAMPSHIRE BORING, INC.
P.O. Box 165
Derry, NH 03038

Phone: (603)437-1610
Fax: (603) 437-0034
E Mail: nhb@nhboring.com

Scale 1" = 5'

City/Town: Acton - Concord | Bridge: Bruce Freeman Rail Trail (Phase II-B) | Project File No: 606223 | Contract No: 76859

Project: Bruce Freeman Rail Trail Route 2 (Phase II-B) | Date & Time Started: 11-21-14 10:30 am | Total Hours: 5

Groundwater Depth: 7' | Date & Time: 11-21-14 3:00 pm | Date & Time Completed: 11-21-14 3:30 pm

Coordinates: N 2995663 E 681571 | Driller's Name: Manlea Thompson | Helper's Name: Donald Palmer

Ground Elevation: 129.0 | Inspector's Name: Jun Jie Li | Inspector's Company: Lamson Engineering, Corp., for *

Sample Number	Depth Range (Feet)	Blow Counts per 6 Inches Coring Times Minute Per Foot	Recovery Inches	Field Description	Strata Changes
S-1	0' - 1'6"	2 2 20 100/0"	14"	TOPSOIL 4" Dry, medium dense, brown, FINE TO COARSE SAND, trace inorganic silt, trace weathered cobble. Top of BEDROCK at 1'6" Rollerbit to 9', thinking advancement was through a boulder but confirmed it was bedrock at 1'6. Began coring at 9'.	1'6"
C-1	9' - 14'	5 5 5 8 8	60"	Hard, fresh, slightly fractured, white-gray GNEISS. Percent Recovery = 100%	
C-1	14' - 19'	10 4 5 6 6	52"	Hard, slightly weathered, slightly fractured, white-gray GNEISS. Percent Recovery = 86%	19'
				Bottom of Exploration = 19'	

Remarks: * AECOM (Consultants)

Protective Device - Stand: Box:
Well Depth: Solid Pipe:
Stick Up Pipe: Screen Pipe:

Penetration Resistance (N) Guide:

Cohesionless Soils (Sands, Gravels)		Cohesive Soils (Silts, Clays)	
Relative Density	Penetration Resistance	Consistency	Penetration Resistance
Very Loose	0 - 4	Very Soft	0 - 2
Loose	4 - 10	Soft	2 - 4
Medium Dense	10 - 30	Medium Stiff	4 - 8
Dense	30 - 50	Stiff	8 - 15
Very Dense	Over 50	Very Stiff	15 - 30
N=Sum of Second and Third 6" Blow Counts		Hard	Over 30

Terms Used for Second Entry of Descriptions: and = 40-50%, some = 10-40%, trace = 10% or less

Type of Drill Rig: CME 550X
Arrow-Board: Signs: Cones:
Casing: HW Size: 4" Amt: 9'
Hammer Weight: 300 lbs. Fall: 30"
Sampler Type: S/S Size: 1 3/8"
Automatic Hammer Weight:
Safety Hammer Weight: 140 lbs.
Donut Hammer Weight: Fall: 30"
Core Barrel Type: NX Size: 2.15"

Boring No. TB-2B-3

massDOT Massachusetts Highway

NEW HAMPSHIRE BORING, INC.
P.O. Box 165
Derry, NH 03038

Phone: (603)437-1610
Fax: (603) 437-0034
E Mail: nhb@nhboring.com

Scale 1" = 5'

City/Town: Acton - Concord | Bridge: Bruce Freeman Rail Trail (Phase II-B) | Project File No: 606223 | Contract No: 76859

Project: Bruce Freeman Rail Trail Route 2 (Phase II-B) | Date & Time Started: 11-24-14 8:00 am | Total Hours: 5

Groundwater Depth: 6.5' | Date & Time: 11-24-14 12:00 pm | Date & Time Completed: 11-24-14 1:00 pm

Coordinates: N 2995634 E 681649 | Driller's Name: Manlea Thompson | Helper's Name: Donald Palmer

Ground Elevation: 129.0 | Inspector's Name: Weijie Dong | Inspector's Company: Lamson Engineering, Corp., for *

Sample Number	Depth Range (Feet)	Blow Counts per 6 Inches Coring Times Minute Per Foot	Recovery Inches	Field Description	Strata Changes
S-1	0' - 2'	2 3 35 25	9"	TOPSOIL 4" Dry, dense, brown, FINE TO COARSE SAND, and fine to medium gravel trace inorganic silt.	
S-2	5' - 6'4"	28 40 80/4"	12"	Dry, very dense, brown, FINE TO COARSE SAND and fine to coarse gravel, trace inorganic silt, possible weathered bedrock in tip of spoon. Top of BEDROCK at 6'10" Advanced rollerbit to 9' through possible granite and began coring.	6'10"
C-1	9' - 14'	3 4 4 6 5	60"	Hard, gray-white GRANITE Percent Recovery = 100%	
C-2	14' - 19'	4 5 5 6 5	60"	Hard, gray, white GRANITE. Percent Recovery = 100%	19'
				Bottom of Exploration = 19'	

Remarks: * AECOM (Consultants)

Protective Device - Stand: Box:
Well Depth: Solid Pipe:
Stick Up Pipe: Screen Pipe:

Penetration Resistance (N) Guide:

Cohesionless Soils (Sands, Gravels)		Cohesive Soils (Silts, Clays)	
Relative Density	Penetration Resistance	Consistency	Penetration Resistance
Very Loose	0 - 4	Very Soft	0 - 2
Loose	4 - 10	Soft	2 - 4
Medium Dense	10 - 30	Medium Stiff	4 - 8
Dense	30 - 50	Stiff	8 - 15
Very Dense	Over 50	Very Stiff	15 - 30
N=Sum of Second and Third 6" Blow Counts		Hard	Over 30

Terms Used for Second Entry of Descriptions: and = 40-50%, some = 10-40%, trace = 10% or less

Type of Drill Rig: CME 550X
Arrow-Board: Signs: Cones:
Casing: HW Size: 4" Amt: 9'
Hammer Weight: 300 lbs. Fall: 30"
Sampler Type: S/S Size: 1 3/8"
Automatic Hammer Weight:
Safety Hammer Weight: 140 lbs.
Donut Hammer Weight: Fall: 30"
Core Barrel Type: NX Size: 2.15"

5 0 5 10

HORIZONTAL
SCALE IN FEET

606223_HD_(BL).DWG Plotted on 26-Jun-2018 11:49 AM

ACTON & CONCORD
BRUCE FREEMAN RAIL TRAIL PHASE 2B

STATE	FED. AID PROJ. NO.	SHEET NO.	TOTAL SHEETS
MA	-	6	146
PROJECT FILE NO.	606223		

BORING LOGS

---

massDOT Massachusetts Highway

NEW HAMPSHIRE BORING, INC.
P.O. Box 165
Derry, NH 03038

Phone: (603)437-1610
Fax: (603) 437-0034
E Mail: nhb@nhboring.com

Boring No. TB-2B-4
Scale 1" = 5'

City/Town: Acton - Concord | Bridge: Bruce Freeman Rail Trail (Phase II-B) | Project File No: 606223 | Contract No: 76859
Project: Bruce Freeman Rail Trail Route 2 (Phase II-B) | Date & Time Started: 11-14-14 12:00 pm | Total Hours: 3.5
Groundwater Depth: 6.4' | Date & Time: 11-14-14 3:15 pm | Date & Time Completed: 11-14-14 3:30 pm
Coordinates: N 2995941 E 681144 | Driller's Name: Manlea Thompson | Helper's Name: Donald Palmer
Ground Elevation: 126.5 | Inspector's Name: Weijie Dong | Inspector's Company: Lamson Engineering, Corp., for *

Sample Number	Depth Range (Feet)	Blow Counts per 6 Inches Coring Times Minute Per Foot	Recovery Inches	Field Description	Strata Changes
				TOPSOIL	5"
S-1	0' - 2'	2 3 4 4	18"	Moist, loose, red-brown FINE TO COARSE SAND, some inorganic silt, trace fine gravel.	4'
S-2	5' - 7'	6 4 5 6	14"	Wet, loose, brown FINE TO COARSE SAND, trace fine gravel, trace inorganic silt.	
S-3	10' - 11'	4 5 14 14	8"	Wet, loose, brown, FINE SAND, trace inorganic silt.	11'
S-3A	11' - 12'		6"	Wet, medium dense, brown, COARSE TO FINE SAND, trace fine gravel.	
S-4	15' - 17'	9 7 11 13	15"	Wet, medium dense, gray, FINE TO COARSE SAND, some fine to coarse gravel, trace inorganic silt.	
S-5	20' - 22'	8 8 8 8	13"	Wet, medium dense, brown, FINE TO COARSE SAND, some fine to medium gravel, trace inorganic silt.	
S-6	25' - 27'	9 8 8 6	10"	Wet, medium dense, gray, FINE TO COARSE SAND, some fine to coarse gravel, trace inorganic silt.	
S-7	30' - 31'8"	7 7 30 80/2"	9"	Wet, dense, gray, FINE TO COARSE SAND and fine to medium gravel, trace inorganic silt.	
S-8	35' - 37'	28 47 51 54	19"	Wet, very dense, gray, FINE TO COARSE SAND, some inorganic silt, trace fine to medium gravel.	37'
				Bottom of Exploration = 37'	

Remarks: * AECOM (Consultants)

Protective Device - Stand: Box:
Well Depth: Solid Pipe:
Stick Up Pipe: Screen Pipe:

Penetration Resistance (N) Guide:

Cohesionless Soils (Sands, Gravels)		Cohesive Soils (Silts, Clays)	
Relative Density	Penetration Resistance	Consistency	Penetration Resistance
Very Loose	0 - 4	Very Soft	0 - 2
Loose	4 - 10	Soft	2 - 4
Medium Dense	10 - 30	Medium Stiff	4 - 8
Dense	30 - 50	Stiff	8 - 15
Very Dense	Over 50	Very Stiff	15 - 30
N=Sum of Second and Third 6" Blow Counts		Hard	Over 30

Terms Used for Second Entry of Descriptions: and = 40-50%, some = 10-40%, trace = 10% or less

Type of Drill Rig: CME 550X
Arrow-Board: Signs: Cones:
Casing: HW Size: 4" Amt: 35'
Hammer Weight: 300 lbs. Fall: 30"
Sampler Type: S/S Size: 1 3/8"
Automatic Hammer Weight:
Safety Hammer Weight: 140 lbs.
Donut Hammer Weight: Fall: 30"
Core Barrel Type: Size:

---

massDOT Massachusetts Highway

NEW HAMPSHIRE BORING, INC.
P.O. Box 165
Derry, NH 03038

Phone: (603)437-1610
Fax: (603) 437-0034
E Mail: nhb@nhboring.com

Boring No. WB-2B-1
Scale 1" = 5'

City/Town: Acton - Concord | Bridge: Bruce Freeman Rail Trail (Phase II-B) | Project File No: 606223 | Contract No: 76859
Project: Bruce Freeman Rail Trail Route 2 (Phase II-B) | Date & Time Started: 11-07-14 11:30 am | Total Hours: 5.5
Groundwater Depth: 8' | Date & Time: 11-10-14 7:25 am | Date & Time Completed: 11-10-14 9:00 am
Coordinates: N 2996414 E 680903 | Driller's Name: Manlea Thompson | Helper's Name: Donald Palmer
Ground Elevation: 130.0 | Inspector's Name: Weijie Dong | Inspector's Company: Lamson Engineering, Corp., for *

Sample Number	Depth Range (Feet)	Blow Counts per 6 Inches Coring Times Minute Per Foot	Recovery Inches	Field Description	Strata Changes
S-1	0' - 2'	2 2 3 3	6"	Dry, loose, dark brown, FINE TO COARSE SAND, trace fine to medium gravel, trace inorganic silt.	
S-2	5' - 7'	8 11 14 16	14"	Dry, medium dense, brown, FINE TO COARSE SAND and fine to medium gravel, trace inorganic silt.	
S-3	10' - 12'	18 21 13 7	9"	Wet, dense, brown, COARSE TO FINE SAND and fine to coarse gravel, trace inorganic silt.	13'6"
S-4	15' - 17'	2 5 4 5	15"	Wet, loose, brown, FINE SAND, some inorganic silt.	
S-5	20' - 22'	3 6 7 7	14"	Wet, medium dense, brown, FINE SAND, some inorganic silt, trace clay.	23'
S-6	25' - 27'	16 27 17 14	17"	Wet, dense, brown, FINE TO COARSE SAND and fine to medium gravel, some inorganic silt (Till.) Drove casing to 28', drive shoe broke had to re-locate hole.	28'
				Boring Terminated at 28'	

Remarks: * AECOM (Consultants)
Changed location; moved boring from N2996414, E680903 to N2996412, E680903 due to drive shoe breaking in hole and started new boring WB-2B-1A.

Protective Device - Stand: Box:
Well Depth: Solid Pipe:
Stick Up Pipe: Screen Pipe:

Penetration Resistance (N) Guide:

Cohesionless Soils (Sands, Gravels)		Cohesive Soils (Silts, Clays)	
Relative Density	Penetration Resistance	Consistency	Penetration Resistance
Very Loose	0 - 4	Very Soft	0 - 2
Loose	4 - 10	Soft	2 - 4
Medium Dense	10 - 30	Medium Stiff	4 - 8
Dense	30 - 50	Stiff	8 - 15
Very Dense	Over 50	Very Stiff	15 - 30
N=Sum of Second and Third 6" Blow Counts		Hard	Over 30

Terms Used for Second Entry of Descriptions: and = 40-50%, some = 10-40%, trace = 10% or less

Type of Drill Rig: CME 550X
Arrow-Board: Signs: Cones:
Casing: HW Size: 4" Amt: 25'
Hammer Weight: 300 lbs. Fall: 30"
Sampler Type: S/S Size: 1 3/8"
Automatic Hammer Weight:
Safety Hammer Weight: 140 lbs.
Donut Hammer Weight: Fall: 30"
Core Barrel Type: Size:

---

massDOT Massachusetts Highway

NEW HAMPSHIRE BORING, INC.
P.O. Box 165
Derry, NH 03038

Phone: (603)437-1610
Fax: (603) 437-0034
E Mail: nhb@nhboring.com

Boring No. WB-2B-1A
Scale 1" = 5'

City/Town: Acton - Concord | Bridge: Bruce Freeman Rail Trail (Phase II-B) | Project File No: 606223 | Contract No: 76859
Project: Bruce Freeman Rail Trail Route 2 (Phase II-B) | Date & Time Started: 11-10-14 9:00 am | Total Hours: 5.5
Groundwater Depth: 8' | Date & Time: 11-10-14 2:30 pm | Date & Time Completed: 11-10-14 2:30 pm
Coordinates: N 2996412 E 680903 | Driller's Name: Manlea Thompson | Helper's Name: Donald Palmer
Ground Elevation: 130.0 | Inspector's Name: Weijie Dong | Inspector's Company: Lamson Engineering, Corp., for *

Sample Number	Depth Range (Feet)	Blow Counts per 6 Inches Coring Times Minute Per Foot	Recovery Inches	Field Description	Strata Changes
				See boring log WB-2B-1 for sample descriptions to 27'.	
				Top of BEDROCK at 28'	28'
				Rollerbit to 30' and began coring.	
C-1	30' - 35'	5 4 4 4 4	58"	Hard, fresh slightly fractured, white GNEISS. Percent Recovery = 96%	
C-2	35' - 40'	4 3 5 3 4	57"	Hard, white, slightly to severely fractured, white GNEISS. Percent Recovery = 95%	40'
				Bottom of Exploration at 40'	

Remarks: * AECOM (Consultants)

Protective Device - Stand: Box:
Well Depth: Solid Pipe:
Stick Up Pipe: Screen Pipe:

Penetration Resistance (N) Guide:

Cohesionless Soils (Sands, Gravels)		Cohesive Soils (Silts, Clays)	
Relative Density	Penetration Resistance	Consistency	Penetration Resistance
Very Loose	0 - 4	Very Soft	0 - 2
Loose	4 - 10	Soft	2 - 4
Medium Dense	10 - 30	Medium Stiff	4 - 8
Dense	30 - 50	Stiff	8 - 15
Very Dense	Over 50	Very Stiff	15 - 30
N=Sum of Second and Third 6" Blow Counts		Hard	Over 30

Terms Used for Second Entry of Descriptions: and = 40-50%, some = 10-40%, trace = 10% or less

Type of Drill Rig: CME 550X
Arrow-Board: Signs: Cones:
Casing: HW Size: 4" Amt: 28'
Hammer Weight: 300 lbs. Fall: 30"
Sampler Type: S/S Size: 1 3/8"
Automatic Hammer Weight:
Safety Hammer Weight: 140 lbs.
Donut Hammer Weight: Fall: 30"
Core Barrel Type: NX Size: 2.15"

---

5 0 5 10
HORIZONTAL
SCALE IN FEET

606223_HD_(BL).DWG Plotted on 26-Jun-2018 11:49 AM

ACTON & CONCORD
BRUCE FREEMAN RAIL TRAIL PHASE 2B

STATE	FED. AID PROJ. NO.	SHEET NO.	TOTAL SHEETS
MA	-	7	146
PROJECT FILE NO.	606223		

BORING LOGS

Boring No. WB-2B-2

massDOT Massachusetts Highway

NEW HAMPSHIRE BORING, INC.
P.O. Box 165
Derry, NH 03038

Phone: (603)437-1610
Fax: (603) 437-0034
E Mail: nhb@nhboring.com

Scale 1" = 5'

City/Town: Acton - Concord | Bridge: Bruce Freeman Rail Trail (Phase II-B) | Project File No: 606223 | Contract No: 76859

Project: Bruce Freeman Rail Trail Route 2 (Phase II-B) | Date & Time Started: 11-06-14 10:00 am | Total Hours: 8.5

Groundwater Depth: 8.5' | Date & Time: 11-07-14 7:30 am | Date & Time Completed: 11-07-14 11:00 am

Coordinates: N 2996310 E 680961 | Driller's Name: Manlea Thompson | Helper's Name: Donald Palmer

Ground Elevation: 127.0 | Inspector's Name: Weijie Dong | Inspector's Company: Lamson Engineering, Corp., for *

Sample Number	Depth Range (Feet)	Blow Counts per 6 Inches Coring Times Minute Per Foot	Recovery Inches	Field Description	Strata Changes
S-1	0' - 2'	3 6 7 7	10"	Dry, medium dense, brown, FINE TO COARSE SAND, some fine to medium gravel, trace inorganic silt.	
S-2	5' - 7'	9 11 14 16	6"	Moist, medium dense, brown, FINE TO COARSE SAND, some fine to medium gravel, trace inorganic silt.	
S-3	10' - 11'6"	15 13 14 7	10"	Wet, medium dense, brown, FINE TO COARSE SAND and fine to medium gravel, trace inorganic silt.	11'6"
S-3A	11'6" - 12'		5"	Wet, medium stiff, gray-brown INORGANIC SILT and fine sand.	15'
S-4	15' - 17'	2 3 3 3	17"	Wet, loose gray-brown FINE SAND, some inorganic silt.	18'6"
S-5	20' - 20'6"	21 21 22 34	5"	Wet, dense, gray-brown, FINE TO COARSE SAND and fine to medium gravel, trace inorganic silt.	20'6"
S-5A	20'6" - 22'		5"	Wet,very dense, gray-brown, FINE TO COARSE SAND, some inorganic silt, some fine to medium gravel, (Till.)	
S-6	25' - 27'	26 60 60/4"	12"	Wet, very dense, gray-brown, FINE TO COARSE SAND, some inorganic silt, some fine to medium gravel, (Till.)	
S-7	30' - 30'6"	120	6"	Wet, very dense, gray-brown, FINE TO COARSE SAND and inorganic silt, some fine to medium gravel, (Till.) Top of BEDROCK at 30'6"	30'6"
				Advanced roller bit through granite to 34' and began coring.	
C-1	34' - 39'	4 4 5 5 5	60"	Hard, fresh, sound, white-gray GRANITE. Percent Recovery = 100%	
C-2	39' - 44'	6 6 7 7 7	60"	Hard, fresh, sound, gray GRANITE. Percent Recovery = 100%	44'
				Bottom of Exploration = 44'	

Remarks: * AECOM (Consultants)

Protective Device - Stand: Box:
Well Depth: Solid Pipe:
Stick Up Pipe: Screen Pipe:

Penetration Resistance (N) Guide:

Cohesionless Soils (Sands, Gravels)		Cohesive Soils (Silts, Clays)	
Relative Density	Penetration Resistance	Consistency	Penetration Resistance
Very Loose	0 - 4	Very Soft	0 - 2
Loose	4 - 10	Soft	2 - 4
Medium Dense	10 - 30	Medium Stiff	4 - 8
Dense	30 - 50	Stiff	8 - 15
Very Dense	Over 50	Very Stiff	15 - 30
N=Sum of Second and Third 6" Blow Counts		Hard	Over 30

Terms Used for Second Entry of Descriptions: and = 40-50%, some = 10-40%, trace = 10% or less

Type of Drill Rig: CME 550X
Arrow-Board: Signs: Cones:
Casing: HW Size: 4" Amt: 30'
Hammer Weight: 300 lbs. Fall: 30"
Sampler Type: S/S Size: 1 3/8"
Automatic Hammer Weight:
Safety Hammer Weight: 140 lbs.
Donut Hammer Weight: Fall: 30"
Core Barrel Type: NX Size: 2.15"

Boring No. WB-2B-3

massDOT Massachusetts Highway

NEW HAMPSHIRE BORING, INC.
P.O. Box 165
Derry, NH 03038

Phone: (603)437-1610
Fax: (603) 437-0034
E Mail: nhb@nhboring.com

Scale 1" = 5'

City/Town: Acton - Concord | Bridge: Bruce Freeman Rail Trail (Phase II-B) | Project File No: 606223 | Contract No: 76859

Project: Bruce Freeman Rail Trail Route 2 (Phase II-B) | Date & Time Started: 11-12-14 7:30 am | Total Hours: 6.5

Groundwater Depth: 8.5' | Date & Time: 11-12-14 2:00 pm | Date & Time Completed: 11-12-14 2:00 pm

Coordinates: N 2996185 E 681019 | Driller's Name: Manlea Thompson | Helper's Name: Donald Palmer

Ground Elevation: 131.0 | Inspector's Name: Weijie Dong | Inspector's Company: Lamson Engineering, Corp., for *

Sample Number	Depth Range (Feet)	Blow Counts per 6 Inches Coring Times Minute Per Foot	Recovery Inches	Field Description	Strata Changes
S-1	0' - 1'	1 1 2 2	9"	Dry, very loose, brown, FINE SAND, trace inorganic silt.	1'
S-1A	1' - 2'		9"	Dry, soft, dark brown, ORGANIC SILT, trace fine sand, trace roots.	3'
S-2	5' - 7'	9 8 11 13	17"	Moist, medium dense, brown, COARSE TO FINE SAND, some fine gravel, trace inorganic silt.	
S-3	10' - 12'	9 9 11 14	6"	Wet, medium dense, brown, COARSE TO FINE SAND and fine to medium gravel, some inorganic silt.	13'6"
S-4	15' - 17'	5 5 5 6	12"	Wet, medium dense, gray FINE SAND and inorganic silt.	
S-5	20' - 22'	4 3 3 4	15"	Wet, loose, brown, FINE SAND, some inorganic silt.	
S-6	25' - 26'6"	2 2 3 6	12"	Wet, loose, gray FINE SAND, some inorganic silt.	26'6"
S-6A	26'6" - 27'		6"	Wet, loose, gray, FINE TO COARSE SAND, some fine to medium gravel, trace inorganic silt.	
S-7	30' - 32'	17 21 30 36	16"	Wet, very dense, gray, FINE TO COARSE SAND, trace fine to medium gravel, trace inorganic silt, (Till.) Top of BEDROCK at 32'2"	32'2"
				Rollerbit to 34' through granite gneiss, began coring at 34'.	
C-1	34' - 39'	3 4 2 3 3	57"	Hard, slightly weathered, slightly to moderately fractured, gray-white GRANITE GNEISS. Percent Recovery = 95%	
C-2	39' - 44'	3 2 3 2 2	30"	Hard, highly weathered, extremely fractured, gray GRANITE. Percent Recovery = 50%	44'
				Bottom of Exploration = 44'	

Remarks: * AECOM (Consultants)

Protective Device - Stand: Box:
Well Depth: Solid Pipe:
Stick Up Pipe: Screen Pipe:

Penetration Resistance (N) Guide:

Cohesionless Soils (Sands, Gravels)		Cohesive Soils (Silts, Clays)	
Relative Density	Penetration Resistance	Consistency	Penetration Resistance
Very Loose	0 - 4	Very Soft	0 - 2
Loose	4 - 10	Soft	2 - 4
Medium Dense	10 - 30	Medium Stiff	4 - 8
Dense	30 - 50	Stiff	8 - 15
Very Dense	Over 50	Very Stiff	15 - 30
N=Sum of Second and Third 6" Blow Counts		Hard	Over 30

Terms Used for Second Entry of Descriptions: and = 40-50%, some = 10-40%, trace = 10% or less

Type of Drill Rig: CME 550X
Arrow-Board: Signs: Cones:
Casing: HW Size: 4" Amt: 32'2"
Hammer Weight: 300 lbs. Fall: 30"
Sampler Type: S/S Size: 1 3/8"
Automatic Hammer Weight:
Safety Hammer Weight: 140 lbs.
Donut Hammer Weight: Fall: 30"
Core Barrel Type: NX Size: 2.15"

Boring No. WB-2B-4

massDOT Massachusetts Highway

NEW HAMPSHIRE BORING, INC.
P.O. Box 165
Derry, NH 03038

Phone: (603)437-1610
Fax: (603) 437-0034
E Mail: nhb@nhboring.com

Scale 1" = 5'

City/Town: Acton - Concord | Bridge: Bruce Freeman Rail Trail (Phase II-B) | Project File No: 606223 | Contract No: 76859

Project: Bruce Freeman Rail Trail Route 2 (Phase II-B) | Date & Time Started: 11-18-14 1:00 pm | Total Hours: 11.5

Groundwater Depth: 7.5' | Date & Time: 11-20-14 8:00 am | Date & Time Completed: 11-20-14 9:00 am

Coordinates: N 2995754.9 E 681434.5 | Driller's Name: Manlea Thompson | Helper's Name: Donald Palmer

Ground Elevation: 129.2 | Inspector's Name: Kin Lam | Inspector's Company: Lamson Engineering, Corp., for *

Sample Number	Depth Range (Feet)	Blow Counts per 6 Inches Coring Times Minute Per Foot	Recovery Inches	Field Description	Strata Changes
S-1	0' - 2'	2 3 3 3	13"	TOPSOIL 4" Dry, loose, brown, FINE TO COARSE SAND, some inorganic silt, trace fine gravel.	
S-2	5' - 6'	2 2 2 2	8"	Wet, loose, brown, FINE TO COARSE SAND, some inorganic silt.	6'
S-2A	6' - 7'		10"	Moist, soft, black/dark brown ORGANIC SILT, trace fine sand, trace roots.	8'
S-3	10' - 12'	3 4 5 5	6"	Wet, loose, brown, FINE TO COARSE SAND, some fine to medium gravel, trace inorganic silt. Top of BEDROCK at 12'1"	12'1"
				Attempted to drive 4" casing when it crimped, pulled out of hole and advanced 5" casing down to 12'1", advanced rollerbit to 15' then advanced 4" casing to 15', rollerbit to 16' and began coring at 16'.	
C-1	16' - 21'	4 4 4 4 4	60"	Very hard sound, fresh, gray-pink-white QUARTZ GNEISS. Percent Recovery = 100%	
C-2	21' - 26'	5 4 4 5 4	60"	Very hard sound, fresh, gray-pink-white QUARTZ GNEISS. Percent Recovery = 100%	26'
				Bottom of Exploration = 26'	

Remarks: * AECOM (Consultants)

Protective Device - Stand: Box:
Well Depth: Solid Pipe:
Stick Up Pipe: Screen Pipe:

Penetration Resistance (N) Guide:

Cohesionless Soils (Sands, Gravels)		Cohesive Soils (Silts, Clays)	
Relative Density	Penetration Resistance	Consistency	Penetration Resistance
Very Loose	0 - 4	Very Soft	0 - 2
Loose	4 - 10	Soft	2 - 4
Medium Dense	10 - 30	Medium Stiff	4 - 8
Dense	30 - 50	Stiff	8 - 15
Very Dense	Over 50	Very Stiff	15 - 30
N=Sum of Second and Third 6" Blow Counts		Hard	Over 30

Terms Used for Second Entry of Descriptions: and = 40-50%, some = 10-40%, trace = 10% or less

Type of Drill Rig: CME 550X
Arrow-Board: Signs: Cones:
Casing: HW Size: 4" Amt: 15'
Casing: PW Size: 5" Amt: 12'1"
Hammer Weight: 300 lbs. Fall: 30"
Sampler Type: S/S Size: 1 3/8"
Automatic Hammer Weight:
Safety Hammer Weight: 140 lbs.
Donut Hammer Weight: Fall: 30"
Core Barrel Type: NX Size: 2.15"

5 0 5 10

HORIZONTAL
SCALE IN FEET

606223_HD_(BL).DWG Plotted on 26-Jun-2018 11:49 AM

ACTON & CONCORD
BRUCE FREEMAN RAIL TRAIL PHASE 2B

STATE	FED. AID PROJ. NO.	SHEET NO.	TOTAL SHEETS
MA	-	8	146
PROJECT FILE NO.	606223		

BORING LOGS

massDOT	NEW HAMPSHIRE BORING, INC. P.O. Box 165 Derry, NH 03038	Phone: (603)437-1610 Fax: (603) 437-0034 E Mail: nhb@nhboring.com	**Boring No.** WB-2B-5 Scale 1" = 5'

City/Town: Acton - Concord | Bridge: Bruce Freeman Rail Trail (Phase II-B) | Project File No: 606223 | Contract No: 76859

Project: Bruce Freeman Rail Trail Route 2 (Phase II-B) | Date & Time Started: 11-20-14 9:30 am | Total Hours: 8.5

Groundwater Depth: 7' | Date & Time: 11-21-14 10:00 am | Date & Time Completed: 11-21-14 10:00 am

Coordinates: N 2995725 E 681508 | Driller's Name: Manlea Thompson | Helper's Name: Donald Palmer

Ground Elevation: 129.8 | Inspector's Name: Jun Jie Li | Inspector's Company: Lamson Engineering, Corp., for *

Sample Number	Depth Range (Feet)	Blow Counts per 6 Inches Coring Times Minute Per Foot	Recovery Inches	Field Description	Strata Changes
				TOPSOIL 4"	1'
S-1	0' - 1'	1 2 120/0"	9"	Dry, very dense, brown, FINE TO COARSE SAND, trace fine gravel, trace inorganic silt.	
				Encountered BOULDER at 1'	
C-1	4' - 9'	6 9 1 .5 .5	33"	Advanced rollerbit to 4' and began coring breaking through boulder at 7', continued to 9' with 5" casing.	
				BOULDER	7'
				Continued to 9' with 5" casing.	
S-2	9' - 11"	9 6 4 4	10"	Wet, medium dense, brown, FINE SAND, some inorganic silt, some fine to medium gravel.	
				Top of BEDROCK at 12'	12'
				Advanced rollerbit to 14' and began coring.	
C-2	14' - 19'	5 9 9 10 9	57"	Hard, fresh, sound, white GNEISS. Percent Recovery = 95%	
C-3	19' - 24'	3 3 4 4 4	40"	Hard, sligtly fractured, gray-white GNEISS. Percent Recovery = 66%	
					24'
				Bottom of Exploration = 24'	

Remarks: * AECOM (Consultants)

On core run C-3 while pulling barrell out of hole 20" of recovery was lost. Two additional attempts were made to retrieve but were unsuccessful.

Protective Device - Stand: Box:
Well Depth: Solid Pipe:
Stick Up Pipe: Screen Pipe:

Type of Drill Rig: CME 550X

Arrow-Board: Signs: Cones:

Casing: PW Size: 5" Amt: 9'
Casing: HW Size: 4" Amt: 12'
Casing: NW Size: 3" Amt: 14'
Hammer Weight: 300 lbs. Fall: 30"

Sampler Type: S/S Size: 1 3/8"
Automatic Hammer Weight:
Safety Hammer Weight: 140 lbs.
Donut Hammer Weight: Fall: 30"

Core Barrel Type: NX Size: 2.15"

Penetration Resistance (N) Guide:

Cohesionless Soils (Sands, Gravels)		Cohesive Soils (Silts, Clays)	
Relative Density	Penetration Resistance	Consistency	Penetration Resistance
Very Loose	0 - 4	Very Soft	0 - 2
Loose	4 - 10	Soft	2 - 4
Medium Dense	10 - 30	Medium Stiff	4 - 8
Dense	30 - 50	Stiff	8 - 15
Very Dense	Over 50	Very Stiff	15 - 30
N=Sum of Second and Third 6" Blow Counts		Hard	Over 30

Terms Used for Second Entry of Descriptions: and = 40-50%, some = 10-40%, trace = 10% or less

5 0 5 10
HORIZONTAL
SCALE IN FEET

606223_HD_(BL).DWG Plotted on 26-Jun-2018 11:49 AM

ACTON & CONCORD
BRUCE FREEMAN RAIL TRAIL PHASE 2B

STATE	FED. AID PROJ. NO.	SHEET NO.	TOTAL SHEETS
MA	-	9	146
PROJECT FILE NO.	606223		

TYPICAL SECTIONS

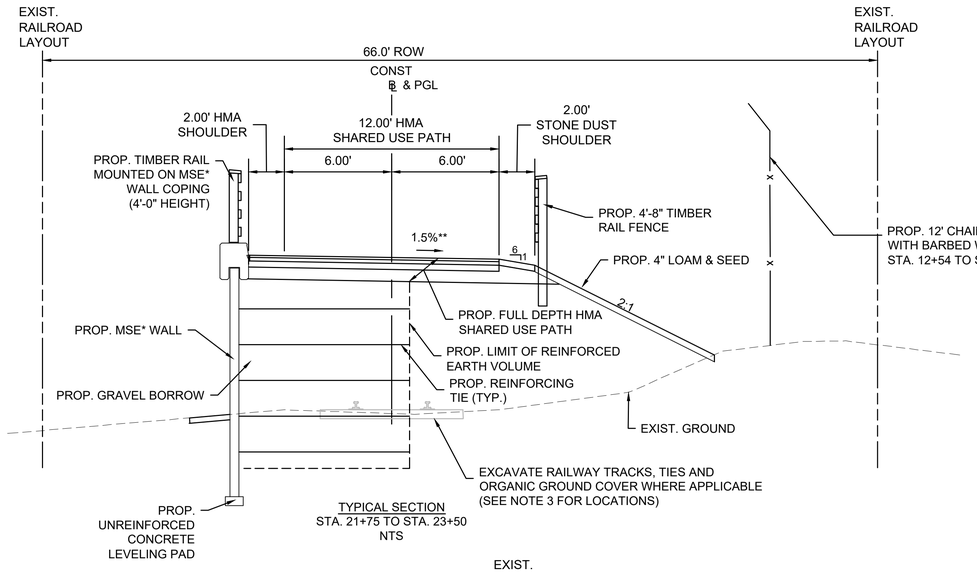

TYPICAL SECTION
STA. 21+75 TO STA. 23+50
NTS

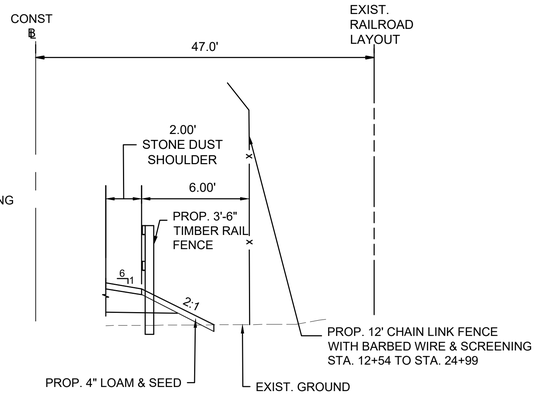

TYPICAL SECTION
LOCATIONS OF 3'-6" TIMBER RAIL FENCE - RIGHT
STA. 13+41 TO STA. 20+20
STA. 20+51 TO STA. 21+55

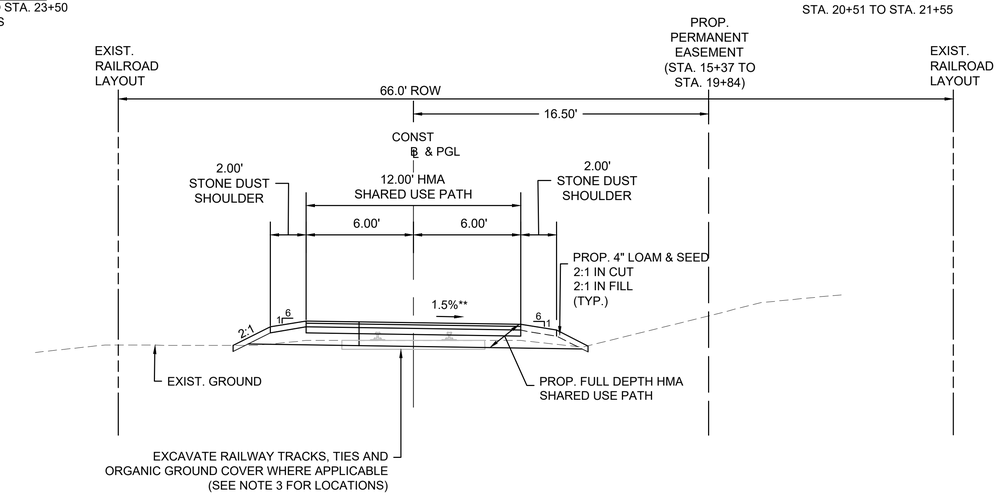

TYPICAL SECTION
STA. 8+75 TO STA. 21+75
STA. 31+75 TO STA. 55+06±
NTS

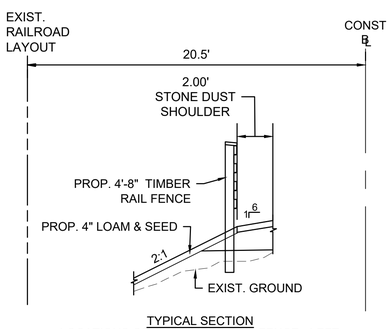

TYPICAL SECTION
LOCATIONS OF 4'-8" TIMBER RAIL FENCE - LEFT
STA. 21+55 TO STA. 21+75
STA. 31+75 TO STA. 32+25

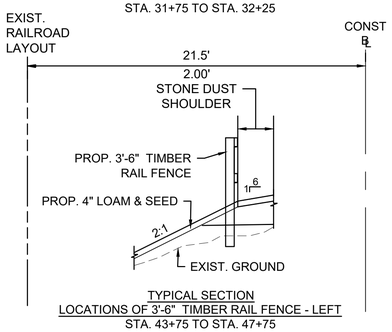

TYPICAL SECTION
LOCATIONS OF 3'-6" TIMBER RAIL FENCE - LEFT
STA. 43+75 TO STA. 47+75

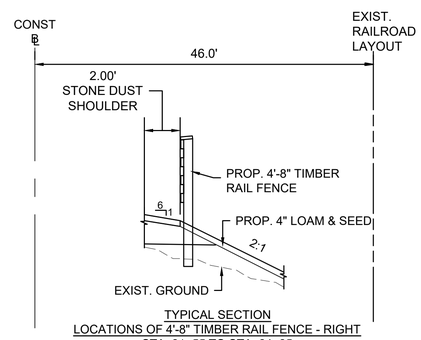

TYPICAL SECTION
LOCATIONS OF 4'-8" TIMBER RAIL FENCE - RIGHT
STA. 21+55 TO STA. 24+25
STA. 28+33 TO STA. 28+98
STA. 30+95 TO STA. 32+25

PAVEMENT NOTES

PROP. FULL DEPTH HMA SHARED USE PATH

SURFACE COURSE:	1¾" SUPERPAVE SURFACE COURSE - 12.5 (SSC-12.5) OVER
INTERMEDIATE COURSE:	2¼" SUPERPAVE INTERMEDIATE COURSE - 19.0 (SIC-19.0) OVER
FOUNDATION:	4" DENSE GRADED CRUSHED STONE FOR SUBBASE OVER 8" GRAVEL BORROW (M1.03.0 TYPE B) OVER SPECIAL BORROW (SEE NOTE BELOW)

NOTE: IN AREAS OF FILL PLACE AN ADDITIONAL 12" OF SPECIAL BORROW, GRAVEL BORROW OR RECLAIMED PAVEMENT FOR SUBBASE TO PROVIDE FROST PROTECTION.

PROP. FULL DEPTH HMA CONSTRUCTION

SURFACE COURSE:	1¾" SUPERPAVE SURFACE COURSE - 12.5 (SSC-12.5) OVER
INTERMEDIATE COURSE:	2½" SUPERPAVE INTERMEDIATE COURSE - 19.0 (SIC-19.0) OVER
BASE COURSE:	4½" SUPERPAVE BASE COURSE - 37.5 (SBC 37.5) OVER
SUBBASE:	4" DENSE GRADED CRUSHED STONE SUBBASE OVER 8" GRAVEL BORROW (M1,03.0 TYPE B)

PROP. PAVEMENT MICROMILLING AND OVERLAY

SURFACE COURSE:	1¾" SUPERPAVE SURFACE COURSE - 12.5 (SSC-12.5) OVER
SURFACE MILLING:	1¾" PAVEMENT MICROMILLING TO MATCH EXISTING CROSS SLOPE

PROP. FULL DEPTH HMA CONSTRUCTION - TEMPORARY CROSSOVER

SURFACE COURSE:	1¾" SUPERPAVE SURFACE COURSE - 12.5 (SSC-12.5) OVER
INTERMEDIATE COURSE:	2½" SUPERPAVE INTERMEDIATE COURSE - 19.0 (SIC-19.0) OVER
SUBBASE:	12" GRAVEL BORROW (M1,03.0 TYPE B)

PROP. STONE DUST SHOULDER

SURFACE:	4" STONE DUST OVER WEED CONTROL FABRIC OVER
FOUNDATION:	2"-8" GRAVEL BORROW (M1.03.0 TYPE B)

PROP. HMA FOR BRIDGE OVER NASHOBA BROOK

SURFACE COURSE:	1½" SUPERPAVE BRIDGE SURFACE COURSE - 9.5 (SSC-B-9.5) OVER
PROTECTIVE COURSE:	1½" SUPERPAVE BRIDGE PROTECTIVE COURSE - 9.5 (SPC-B-9.5)

PROP. CEMENT CONCRETE FOR REST AREAS

SURFACE COURSE:	4" CEMENT CONCRETE (AIR ENTRAINED 4000 PSI, ¾", 610) OVER
SUBBASE:	8" GRAVEL BORROW (M1.03.0 TYPE B)

TACK COAT

ASPHALT EMULSION FOR TACK COAT SHALL BE APPLIED AT THE RATE OF 0.07 GAL/SY FOR MILLED SURFACES AND 0.05 GAL/SY FOR SMOOTH TIGHT PAVED SURFACES.

NOTES:

1. THE SECTIONS OF PROPOSED SHARED USE PATH NOT COVERED IN THE RANGE OF STATIONS ASSOCIATED WITH THE TYPICAL SECTIONS ARE EITHER IN TRANSITION OR ARE LOCATED AT INTERSECTIONS AND THEREFORE HAVE NOT BEEN SHOWN. REFER TO CROSS SECTION SHEETS FOR MORE DETAILS.
2. CONTRACTOR SHALL REMOVE EXISTING ORGANIC MATERIAL (ABOVE RAILROAD BALLAST) THAT IS UNSUITABLE FOR REUSE AND DISPOSE OF THIS MATERIAL OUTSIDE OF THE PROJECT LIMITS. IT IS ASSUMED THAT ALL OTHER EXCAVATED SUITABLE MATERIAL WILL REMAIN WITHIN THE PROJECT LIMITS. SEE SPECIAL PROVISIONS FOR DETAILS.
3. EXCAVATE RAILROAD TRACKS AND TIES FROM STA. 14+15 TO STA. 25+64 AND STA. 27+64 TO STA. 55+20.

*MSE: MECHANICALLY STABILIZED EARTH.

**TOLERANCE FOR CONSTRUCTION ±0.5%

606223_HD_(TYP).DWG Plotted on 26-Jun-2018 11:49 AM

ACTON & CONCORD
BRUCE FREEMAN RAIL TRAIL PHASE 2B

STA.TE	FED. AID PROJ. NO.	SHEET NO.	TOTAL SHEETS
MA	-	10	146
PROJECT FILE NO.	606223		

TYPICAL SECTIONS

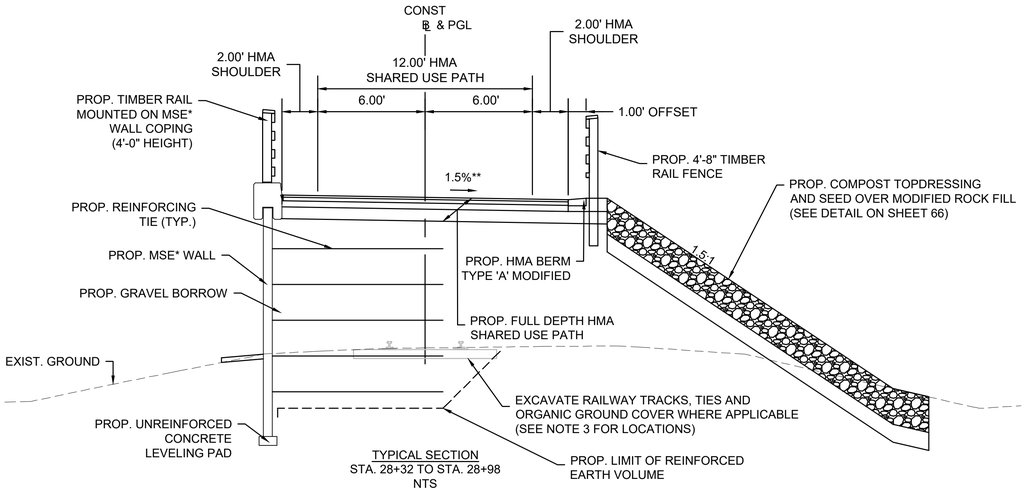

TYPICAL SECTION
STA. 28+32 TO STA. 28+98
NTS

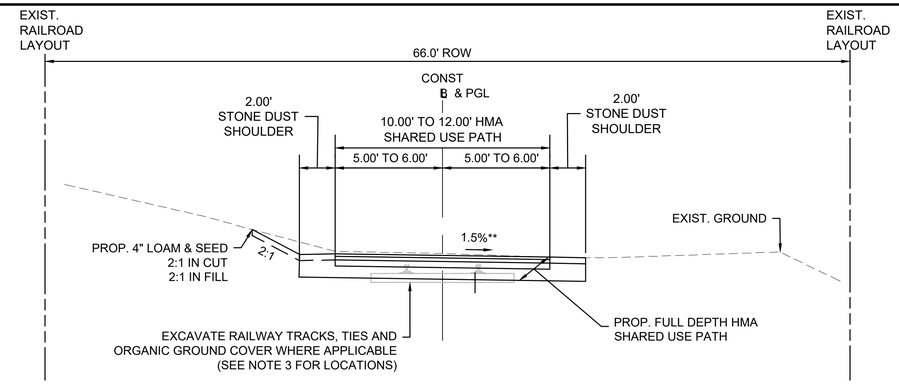

TYPICAL SECTION
STA. 55+06± TO STA. 55+22±
NTS

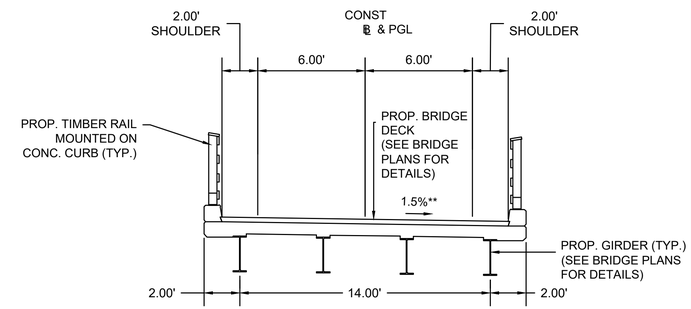

TYPICAL SECTION
BRIDGE SECTION OVER NASHOBA BROOK
STA. 29+31 TO STA. 29+81
NTS

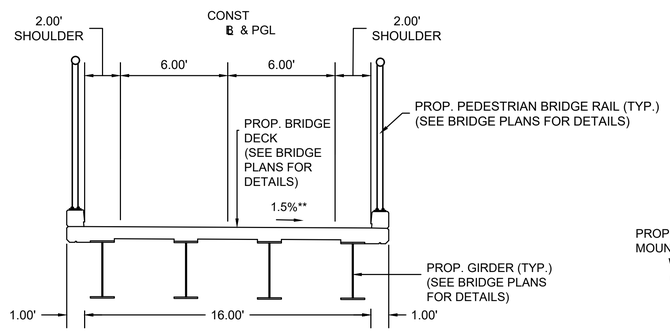

TYPICAL SECTION
BRIDGE SECTION OVER ROUTE 2
STA. 25+04 TO STA. 28+08
NTS

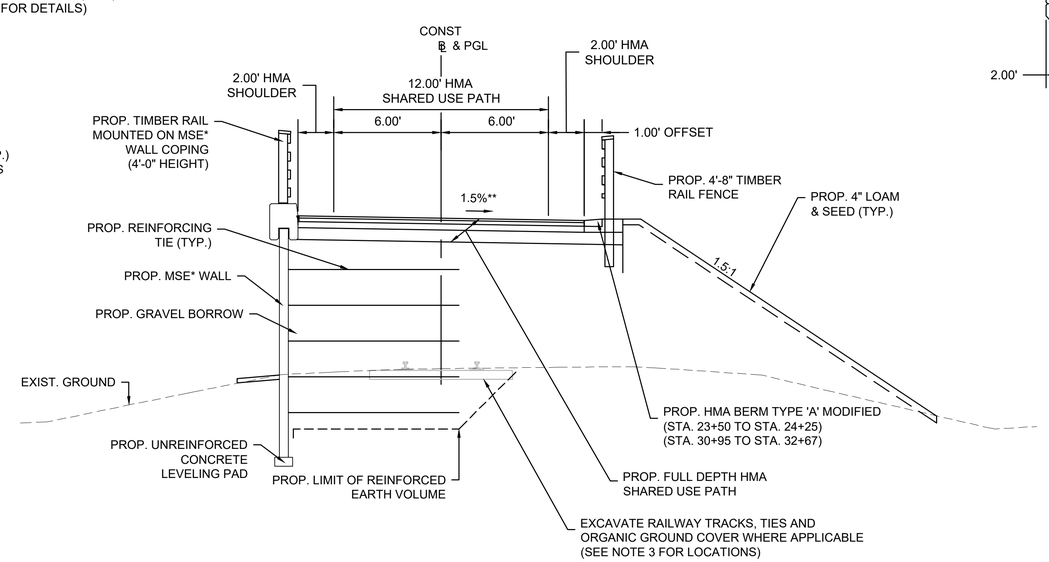

TYPICAL SECTION
STA. 23+50 TO STA. 24+25
STA. 30+95 TO STA. 31+75
NTS

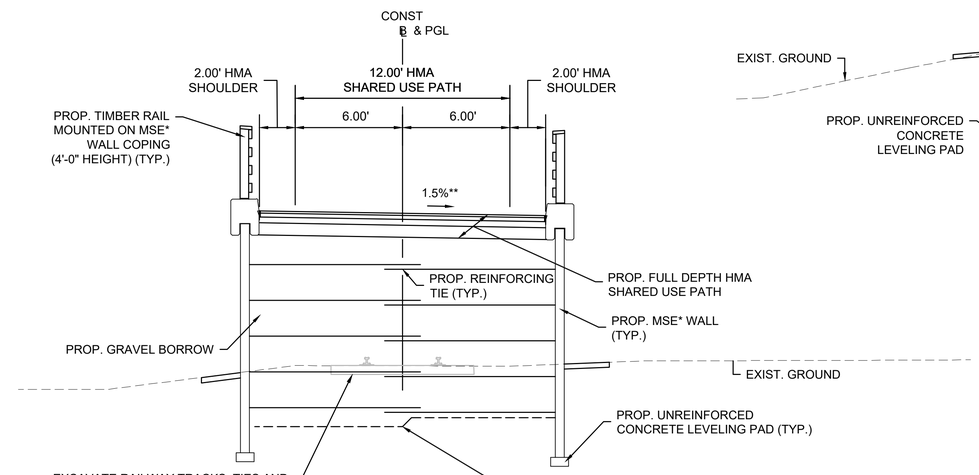

TYPICAL SECTION
STA. 24+25 TO STA. 24+74
STA. 30+05 TO STA. 30+95
NTS

NOTES:

1. THE SECTIONS OF PROPOSED SHARED USE PATH NOT COVERED IN THE RANGE OF STATIONS ASSOCIATED WITH THE TYPICAL SECTIONS ARE EITHER IN TRANSITION OR ARE LOCATED AT INTERSECTIONS AND THEREFORE HAVE NOT BEEN SHOWN. REFER TO CROSS SECTION SHEETS FOR MORE DETAILS.

2. CONTRACTOR SHALL REMOVE EXISTING ORGANIC MATERIAL (ABOVE RAILROAD BALLAST) THAT IS UNSUITABLE FOR REUSE AND DISPOSE OF THIS MATERIAL OUTSIDE OF THE PROJECT LIMITS. IT IS ASSUMED THAT ALL OTHER EXCAVATED SUITABLE MATERIAL WILL REMAIN WITHIN THE PROJECT LIMITS. SEE SPECIAL PROVISIONS FOR DETAILS.

3. EXCAVATE RAILROAD TRACKS AND TIES FROM STA. 14+15 TO STA. 25+64 AND STA. 27+64 TO STA. 55+20.

MSE*: MECHANICALLY STABILIZED EARTH.

**TOLERANCE FOR CONSTRUCTION ±0.5%

606223_HD_(TYP).DWG Plotted on 26-Jun-2018 11:49 AM

ACTON & CONCORD
BRUCE FREEMAN RAIL TRAIL PHASE 2B

STATE	FED. AID PROJ. NO.	SHEET NO.	TOTAL SHEETS
MA	-	11	146
PROJECT FILE NO.	606223		

CONSTRUCTION BASELINE TIES

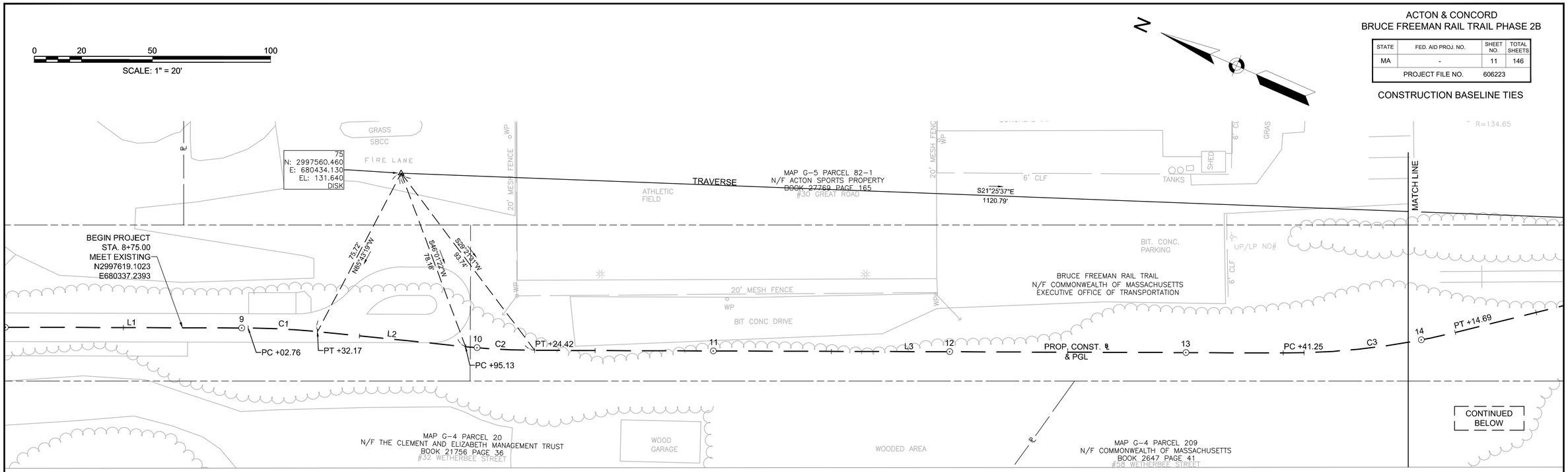

BFRT 2B CONSTRUCTION BASELINE DATA

NUMBER	STARTING STATION	NORTHING	EASTING	CURVE DATA	LINE DATA	ENDING STATION	NORTHING	EASTING
L1	8+00.00	2997687.9239	680307.430		S23° 25' 09"E 102.76'	9+02.76	2997593.6328	680348.2712
C1	9+02.76	2997593.6328	680348.271	R=300.00' Δ=5°37'07" L=29.42' T=14.72'		9+32.17	2997566.1084	680358.6224
L2	9+32.17	2997566.1084	680358.622		S17° 48' 03"E 62.95'	9+95.13	2997506.1709	680377.8672
C2	9+95.13	2997506.1709	680377.867	R 300.00' Δ=5°35'44" L=29.30' T=14.66'		10+24.42	2997478.7571	680388.1705
L3	10+24.42	2997478.7571	680388.171		S23° 23' 47"E 316.82'	13+41.25	2997187.9841	680513.9767

BFRT 2B CONSTRUCTION BASELINE DATA

NUMBER	STARTING STATION	NORTHING	EASTING	CURVE DATA	LINE DATA	ENDING STATION	NORTHING	EASTING
C3	13+41.25	2997187.9841	680513.977	R 300.00' Δ=14°01'34" L=73.44' T=36.90'		14+14.69	2997124.8046	680551.0577
L4	14+14.69	2997124.8046	680551.058		S37° 25' 21"E 90.28'	15+04.96	2997053.1103	680605.9167
C4	15+04.96	2997053.1103	680605.917	R 300.00' Δ=14°18'12" L=74.89' T=37.64'		15+79.85	2996988.5972	680643.5709
L5	15+79.85	2996988.5972	680643.571		S23° 07' 09"E 495.98'	20+75.83	2996532.4505	680838.3133

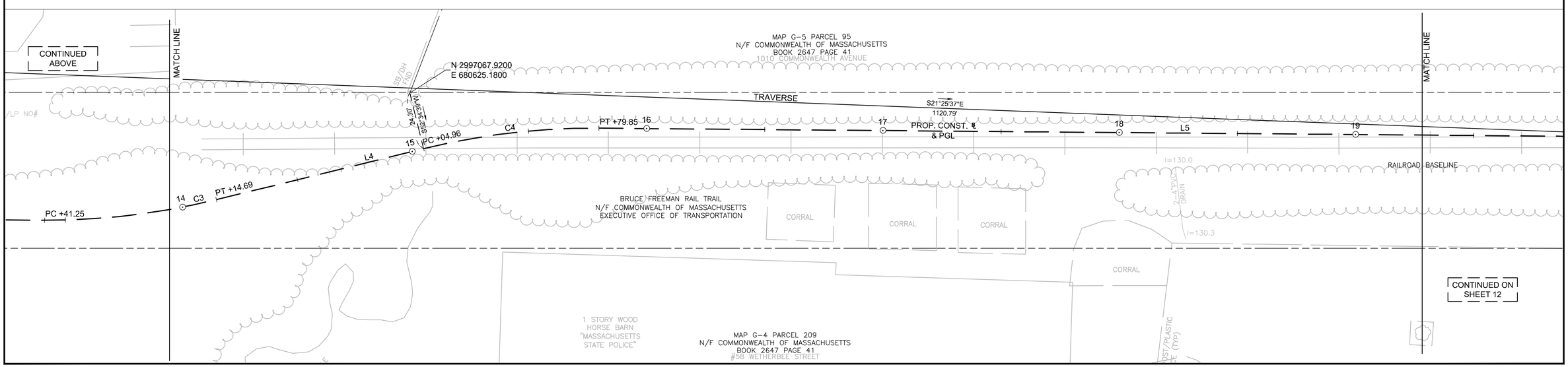

606223_HD_(BLT).DWG 26-Jun-2018

ACTON & CONCORD
BRUCE FREEMAN RAIL TRAIL PHASE 2B

STATE	FED. AID PROJ. NO.	SHEET NO.	TOTAL SHEETS
MA	-	12	146
PROJECT FILE NO.	606223		

CONSTRUCTION BASELINE TIES

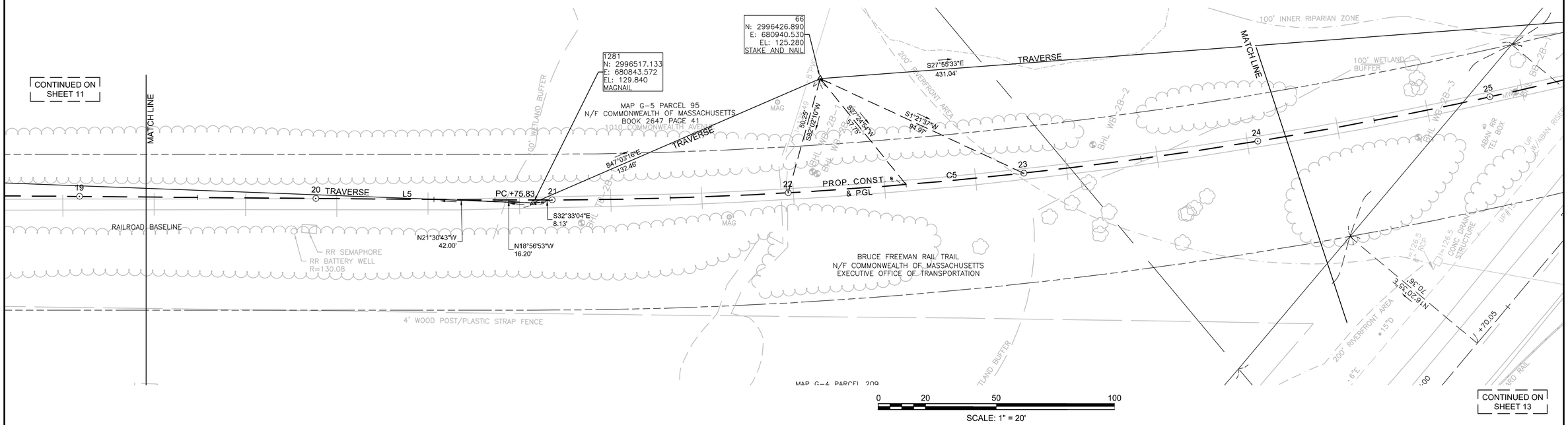

BFRT 2B CONSTRUCTION BASELINE DATA								
NUMBER	STARTING STATION	NORTHING	EASTING	CURVE DATA	LINE DATA	ENDING STATION	NORTHING	EASTING
L5	15+79.85	2996988.5972	680643.571		S23° 07' 09"E 495.98'	20+75.83	2996532.4505	680838.3133
C5	20+75.83	2996532.4505	680838.313	R 1900.00' Δ= 37°56'23" L=1258.13' T=653.10'		33+33.96	2995615.7512	681666.2922

606223_HD_(BLT).DWG 26-Jun-2018

ACTON & CONCORD
BRUCE FREEMAN RAIL TRAIL PHASE 2B

STATE	FED. AID PROJ. NO.	SHEET NO.	TOTAL SHEETS
MA	-	13	146
PROJECT FILE NO.	606223		

CONSTRUCTION BASELINE TIES

606223_HD_(BLT).DWG 28-Jun-2018

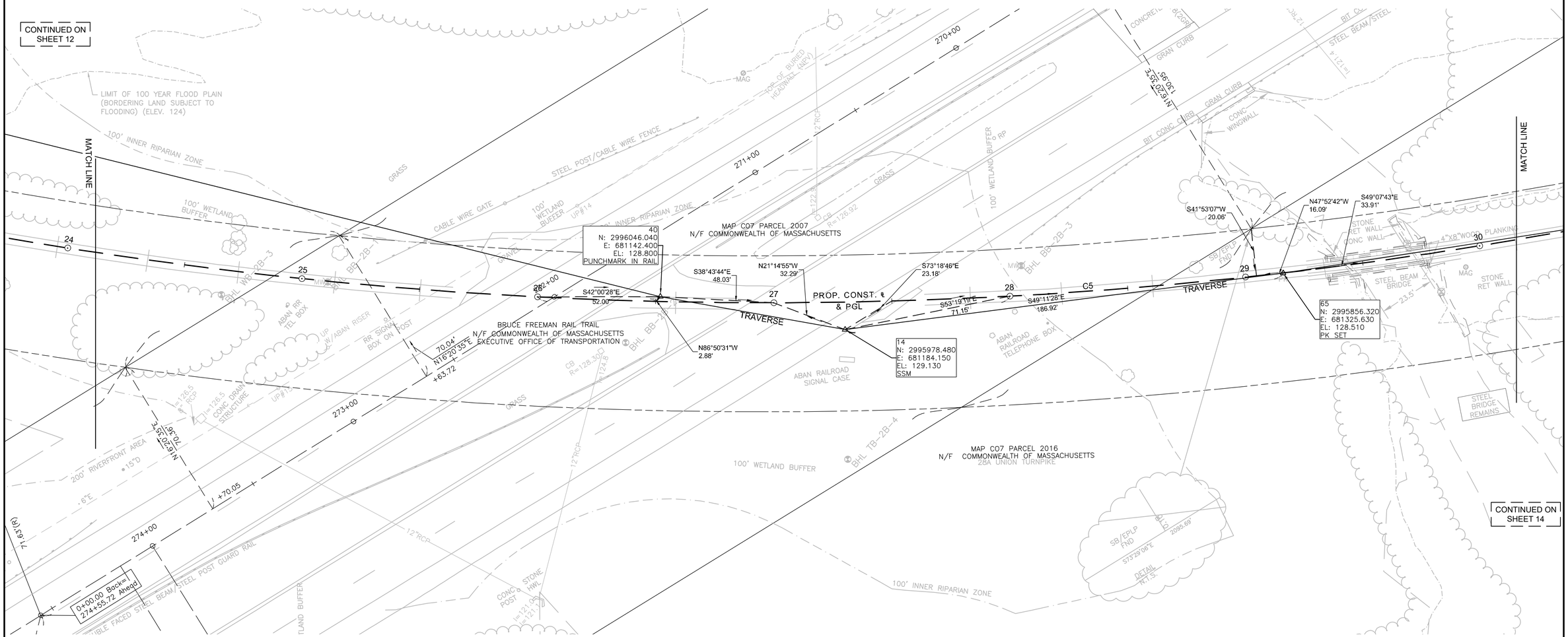

BFRT 2B CONSTRUCTION BASELINE DATA								
NUMBER	STARTING STATION	NORTHING	EASTING	CURVE DATA	LINE DATA	ENDING STATION	NORTHING	EASTING
C5	20+75.83	2996532.4505	680838.313	R 1900.00' Δ= 37°56'23" L=1258.13' T=653.10'		33+33.96	2995615.7512	681666.2922

0 20 50 100

SCALE: 1" = 20'

ACTON & CONCORD
BRUCE FREEMAN RAIL TRAIL PHASE 2B

STATE	FED. AID PROJ. NO.	SHEET NO.	TOTAL SHEETS
MA	-	14	146
PROJECT FILE NO.	606223		

CONSTRUCTION BASELINE TIES

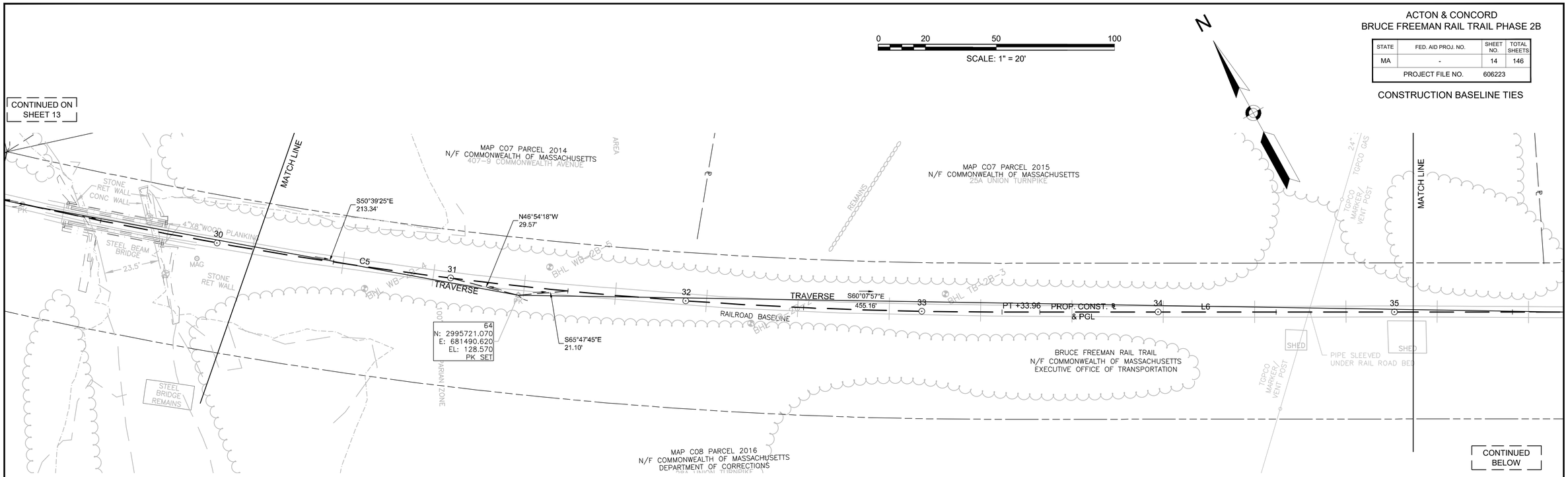

BFRT 2B CONSTRUCTION BASELINE DATA

NUMBER	STARTING STATION	NORTHING	EASTING	CURVE DATA	LINE DATA	ENDING STATION	NORTHING	EASTING
C5	20+75.83	2996532.4505	680838.313	R 1900.00 Δ=37°56'23" L=1258.13' T=653.10'		33+33.96	2995615.7512	681666.2922
L6	33+33.96	2995615.7512	681666.292		S61° 03' 31"E 1596.78'	49+30.74	2994843.0483	683063.6623

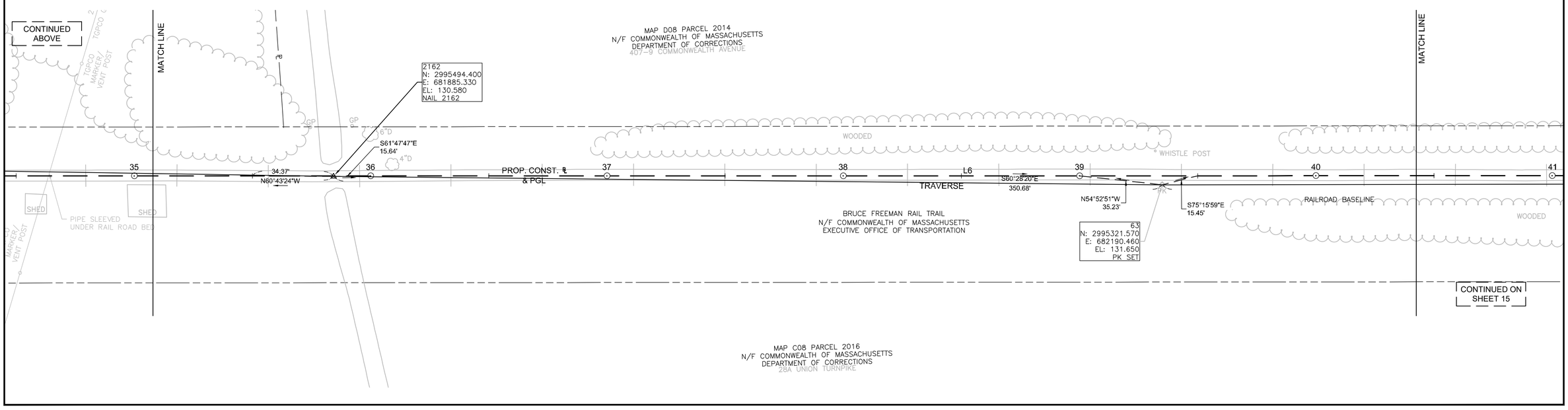

606223_HD_(BLT).DWG 28-Jun-2018

ACTON & CONCORD
BRUCE FREEMAN RAIL TRAIL PHASE 2B

STATE	FED. AID PROJ. NO.	SHEET NO.	TOTAL SHEETS
MA	-	15	146
PROJECT FILE NO.	606223		

CONSTRUCTION BASELINE TIES

606223_HD_(BLT).DWG 26-Jun-2018

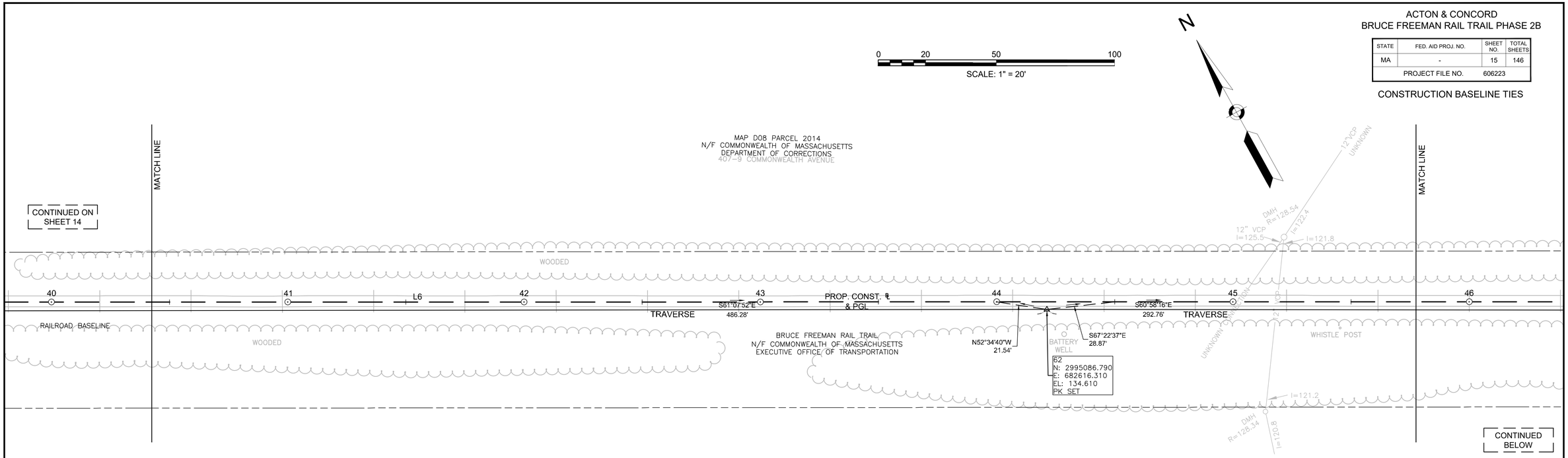

BFRT 2B CONSTRUCTION BASELINE DATA								
NUMBER	STARTING STATION	NORTHING	EASTING	CURVE DATA	LINE DATA	ENDING STATION	NORTHING	EASTING
L6	33+33.96	2995615.7512	681666.292		S61° 03' 31"E 1596.78'	49+30.74	2994843.0483	683063.6623
C6	49+30.74	2994843.0483	683063.662	R=1814.00' Δ=17°34'17" L=556.31' T=280.36'		54+87.05	2994503.9741	683501.9474

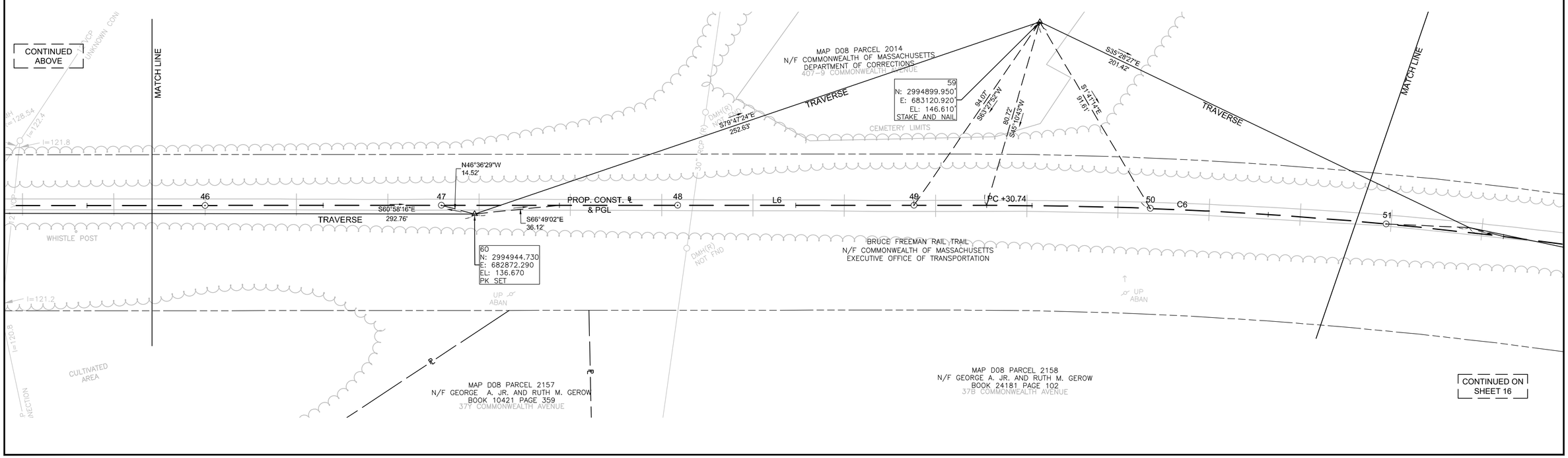

ACTON & CONCORD
BRUCE FREEMAN RAIL TRAIL PHASE 2B

STATE	FED. AID PROJ. NO.	SHEET NO.	TOTAL SHEETS
MA	-	16	146
PROJECT FILE NO.	606223		

CONSTRUCTION BASELINE TIES

606223_HD_(BLT).DWG 26-Jun-2018

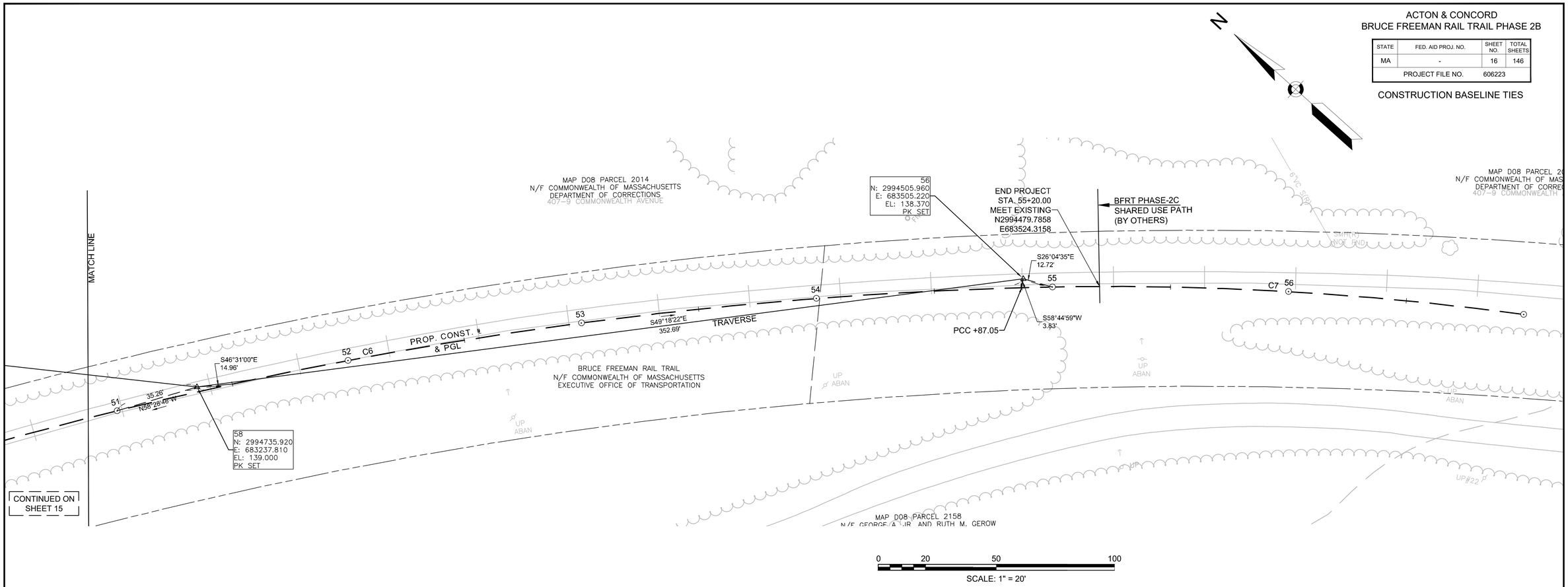

BFRT 2B CONSTRUCTION BASELINE DATA								
NUMBER	STARTING STATION	NORTHING	EASTING	CURVE DATA	LINE DATA	ENDING STATION	NORTHING	EASTING
C6	49+30.74	2994843.0483	683063.662	R=1814.00' Δ=17°34'17" L=556.31' T=280.36'		54+87.05	2994503.9741	683501.9474
C7	54+87.05	2994503.9741	683501.947	R 1300.00' Δ=9°23'07" L=212.95' T=106.71'		57+00.00	2994338.1901	683635.2164

ACTON & CONCORD
BRUCE FREEMAN RAIL TRAIL PHASE 2B

STATE	FED. AID PROJ. NO.	SHEET NO.	TOTAL SHEETS
MA	-	17	146
PROJECT FILE NO.	606223		

CONSTRUCTION PLANS & PROFILES

606223_HD_(CO).DWG 26-Jun-2018

TIMBER RAIL FENCE DETAILS	HIGHWAY GUARD DETAILS	TRAFFIC SIGNAL CONDUIT	WATER SUPPLY ALTERATIONS	DRAINAGE DETAILS
STA. 13+41 RT TO STA. 20+20 RT - ITEM 655.01	NONE	NONE	NONE	SEE BELOW

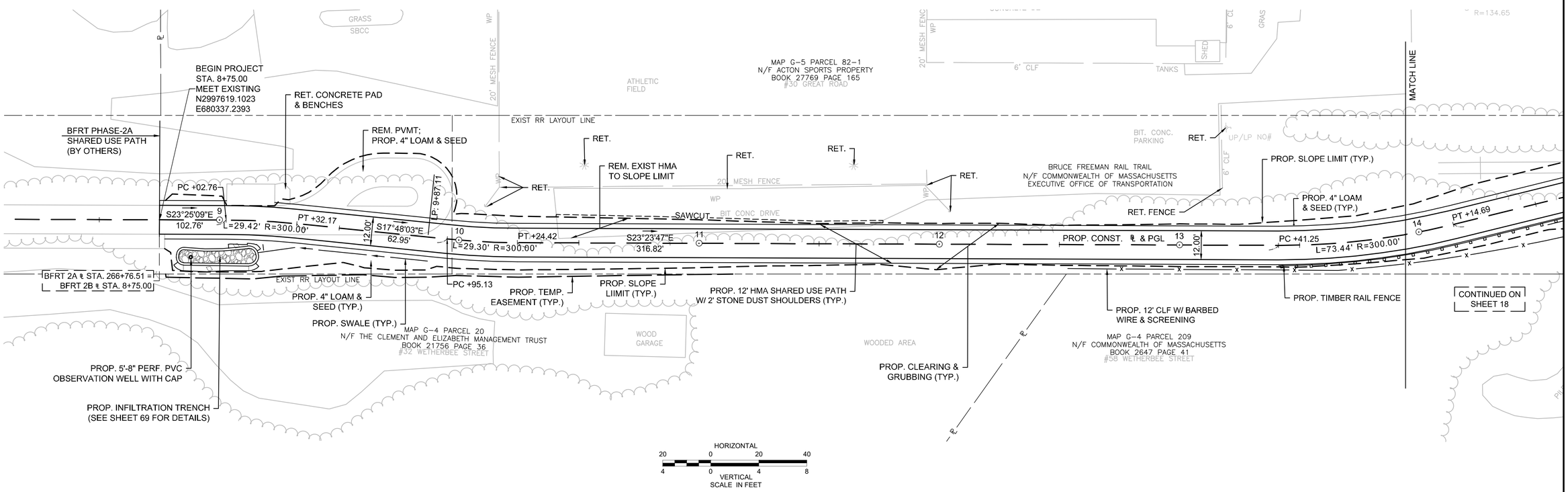

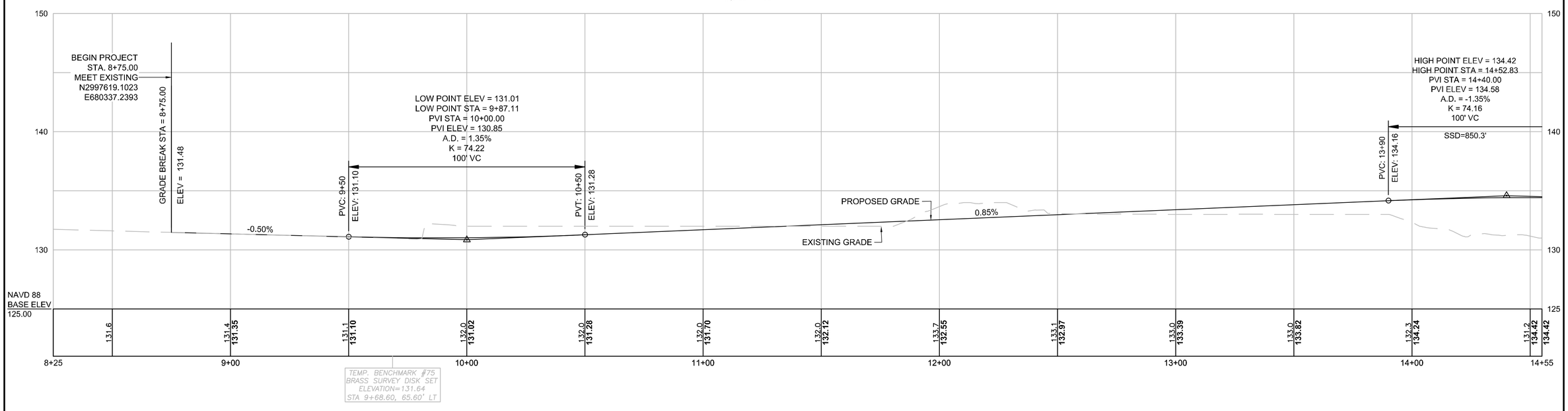

TIMBER RAIL FENCE DETAILS	HIGHWAY GUARD DETAILS	TRAFFIC SIGNAL CONDUIT	WATER SUPPLY ALTERATIONS	DRAINAGE DETAILS
STA. 13+41 RT TO STA. 20+20 RT - ITEM 655.01	NONE	NONE	NONE	SEE BELOW

ACTON & CONCORD
BRUCE FREEMAN RAIL TRAIL PHASE 2B

STATE	FED. AID PROJ. NO.	SHEET NO.	TOTAL SHEETS
MA	-	18	146
PROJECT FILE NO.	606223		

CONSTRUCTION PLANS & PROFILES

606223_HD_(CO).DWG 26-Jun-2018

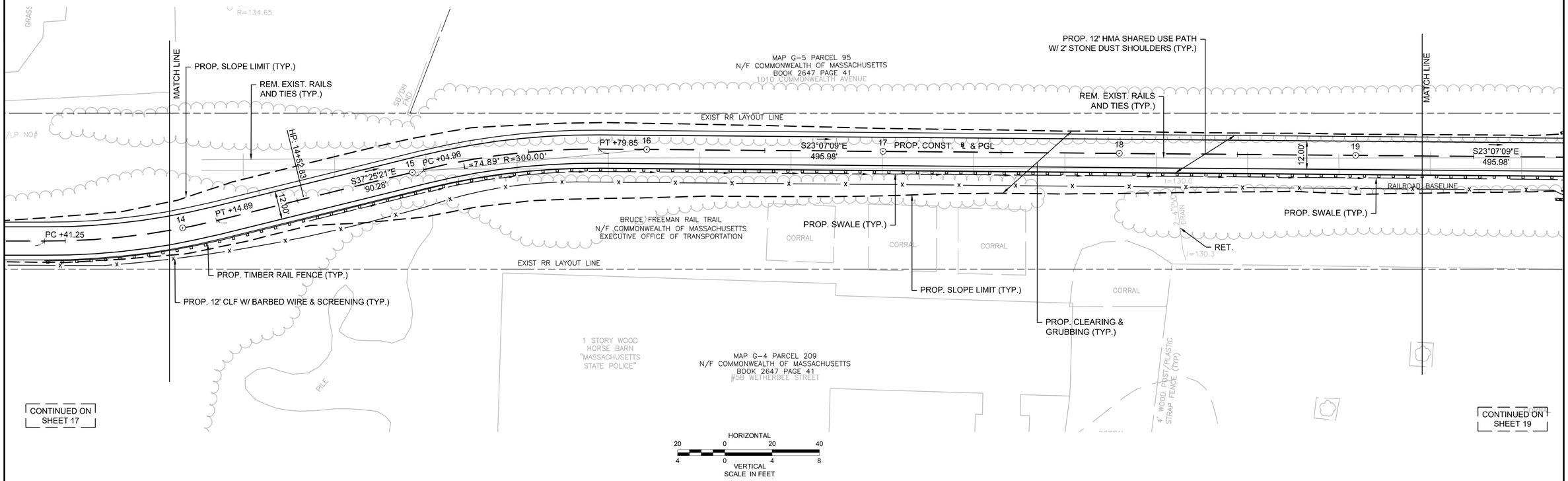

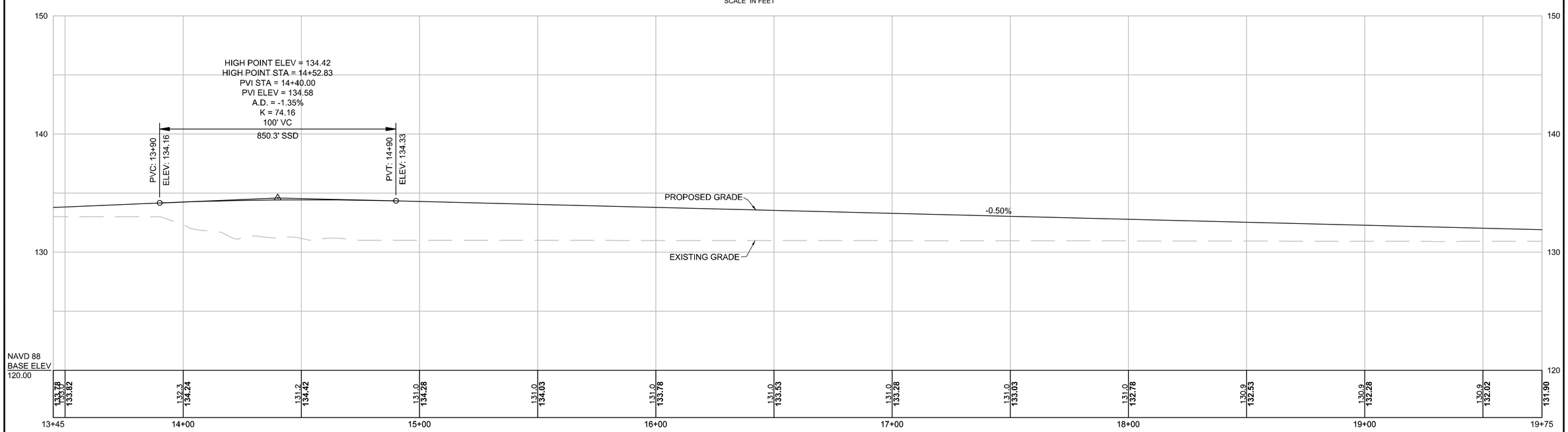

ACTON & CONCORD
BRUCE FREEMAN RAIL TRAIL PHASE 2B

STATE	FED. AID PROJ. NO.	SHEET NO.	TOTAL SHEETS
MA	-	19	146
PROJECT FILE NO.	606223		

CONSTRUCTION PLANS & PROFILES

606223_HD_(CO).DWG 26-Jun-2018

TIMBER RAIL FENCE DETAILS

STA. 13+41 RT TO STA. 20+20 RT - ITEM 655.01
STA. 20+51 RT TO STA. 21+55 RT - ITEM 655.01
STA. 21+55 LT TO STA. 21+75 LT - ITEM 655.04
STA. 21+55 RT TO STA. 24+25 RT - ITEM 655.04
STA. 21+75 LT TO STA. 24+96 LT - ITEM 655.02
STA. 24+25 RT TO STA. 24+73 RT - ITEM 655.02

HIGHWAY GUARD DETAILS

NONE

TRAFFIC SIGNAL CONDUIT

NONE

WATER SUPPLY ALTERATIONS

NONE

DRAINAGE DETAILS

SEE BELOW

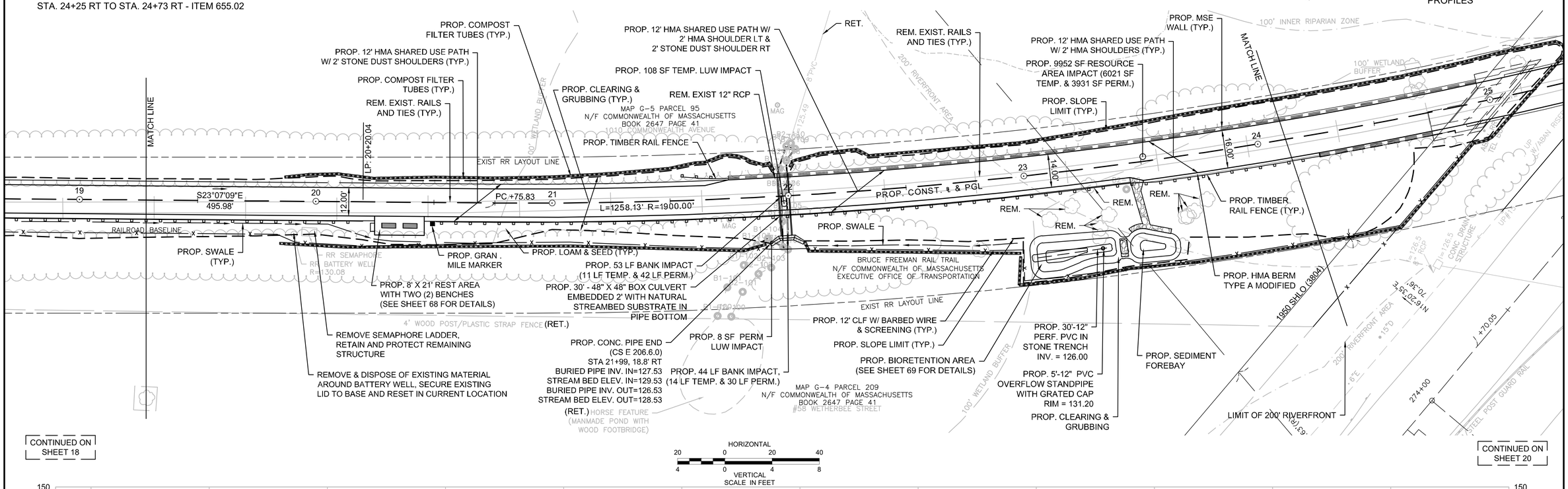

CONTINUED ON SHEET 18

CONTINUED ON SHEET 20

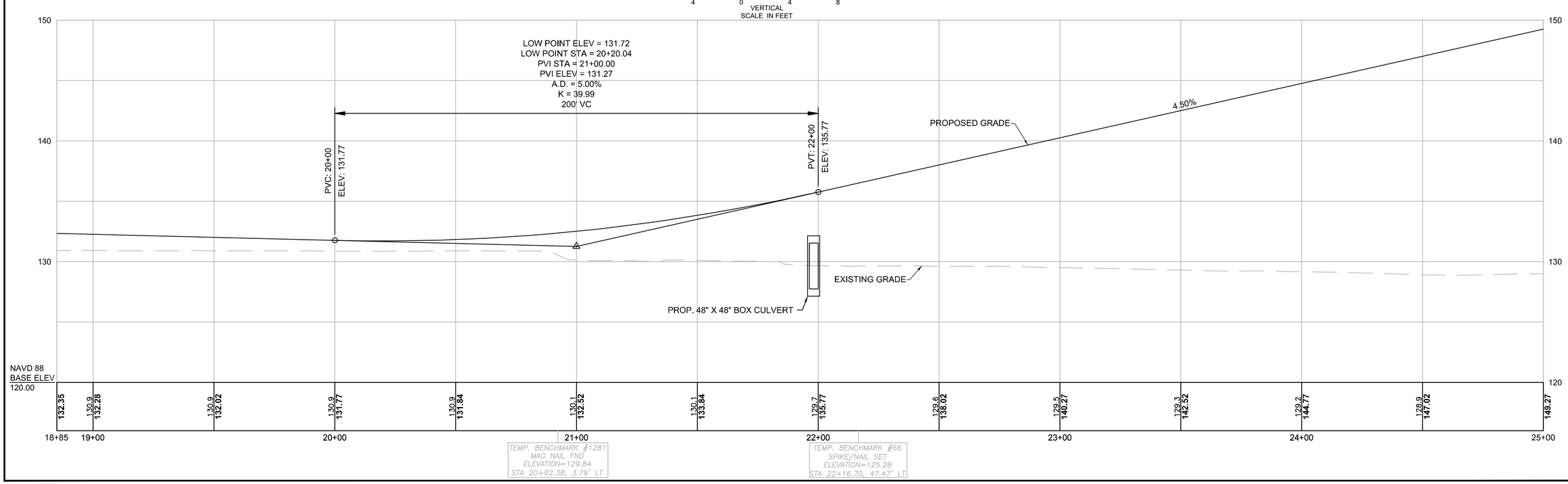

ACTON & CONCORD
BRUCE FREEMAN RAIL TRAIL PHASE 2B

STATE	FED. AID PROJ. NO.	SHEET NO.	TOTAL SHEETS
MA	-	20	146
PROJECT FILE NO.	606223		

CONSTRUCTION PLANS & PROFILES

606223_HD_(CO).DWG 26-Jun-2018

TIMBER RAIL FENCE DETAILS

STA. 21+55 RT TO STA. 24+25 RT - ITEM 655.04
STA. 21+75 LT TO STA. 24+96 LT - ITEM 655.02
STA. 24+25 RT TO STA. 24+73 RT - ITEM 655.02
STA. 28+17 RT TO STA. 28+32 RT - ITEM 655.02
STA. 28+51 LT TO STA. 29+08 LT - ITEM 655.02
STA. 28+32 RT TO STA. 28+98 RT - ITEM 655.04
STA. 28+98 RT TO STA. 29+08 RT - ITEM 655.02
STA. 30+05 RT TO STA. 30+95 RT - ITEM 655.02
STA. 30+06 LT TO STA. 31+75 LT - ITEM 655.02

HIGHWAY GUARD DETAILS

STA. 26+36 RT - ITEM 627.4
STA. 26+91 LT - ITEM 627.4
STA. 26+36 RT TO STA. 27+28 LT - ITEM 624.1
STA. 26+51 RT TO STA. 26+91 LT - ITEM 624.1

TRAFFIC SIGNAL CONDUIT

NONE

WATER SUPPLY ALTERATIONS

NONE

DRAINAGE DETAILS

SEE BELOW

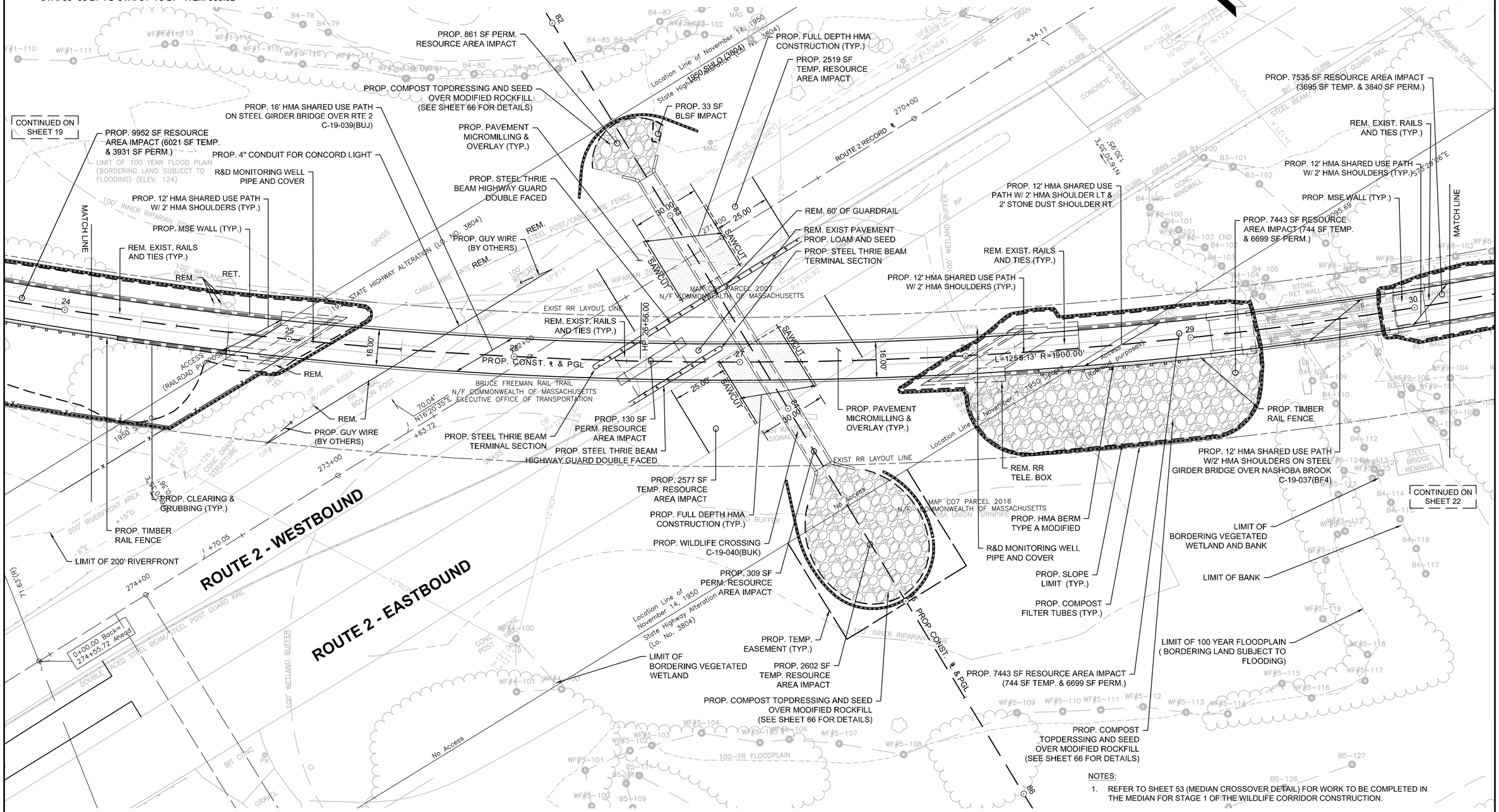

NOTES:

1. REFER TO SHEET 53 (MEDIAN CROSSOVER DETAIL) FOR WORK TO BE COMPLETED IN THE MEDIAN FOR STAGE 1 OF THE WILDLIFE CORRIDOR CONSTRUCTION.

0 20 50 100
SCALE: 1" = 20'

FOR PROFILE: SEE SHEET NO. 21

ACTON & CONCORD
BRUCE FREEMAN RAIL TRAIL PHASE 2B

STATE	FED. AID PROJ. NO.	SHEET NO.	TOTAL SHEETS
MA	-	21	146
PROJECT FILE NO.	606223		

CONSTRUCTION PLANS & PROFILES

606223_HD_(CO).DWG 28-Jun-2018

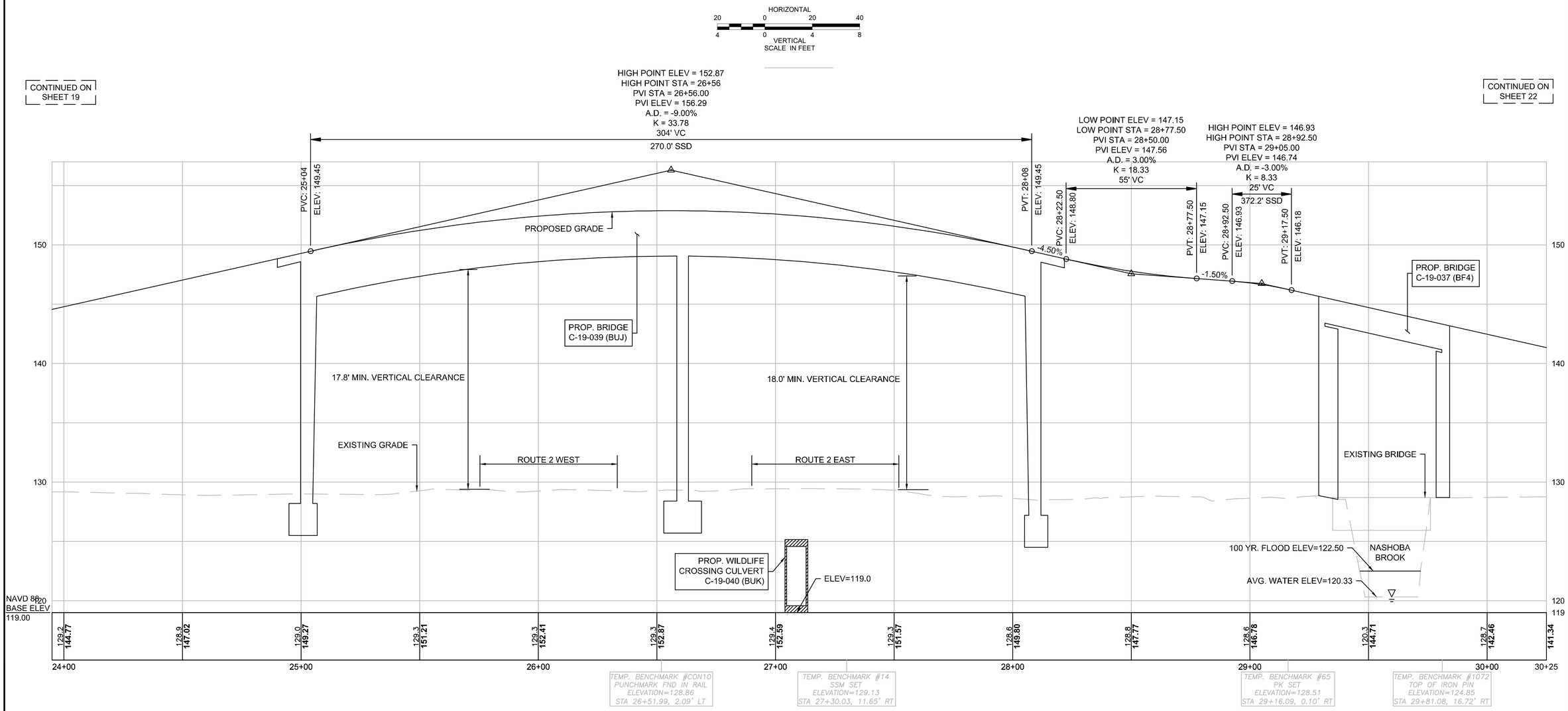

FOR CONSTRUCTION PLAN: SEE SHEET NO. 20

ACTON & CONCORD
BRUCE FREEMAN RAIL TRAIL PHASE 2B

STATE	FED. AID PROJ. NO.	SHEET NO.	TOTAL SHEETS
MA	-	22	146
PROJECT FILE NO.	606223		

CONSTRUCTION PLANS & PROFILES

606223_HD_(CO).DWG 26-Jun-2018

TIMBER RAIL FENCE DETAILS

STA. 30+05 RT TO STA. 30+95 RT - ITEM 655.02
STA. 30+06 LT TO STA. 31+75 LT - ITEM 655.02
STA. 30+95 RT TO STA. 32+25 RT - ITEM 655.04
STA. 31+75 LT TO STA. 32+25 LT - ITEM 655.04

HIGHWAY GUARD DETAILS

NONE

TRAFFIC SIGNAL CONDUIT

NONE

WATER SUPPLY ALTERATIONS

NONE

DRAINAGE DETAILS

SEE BELOW

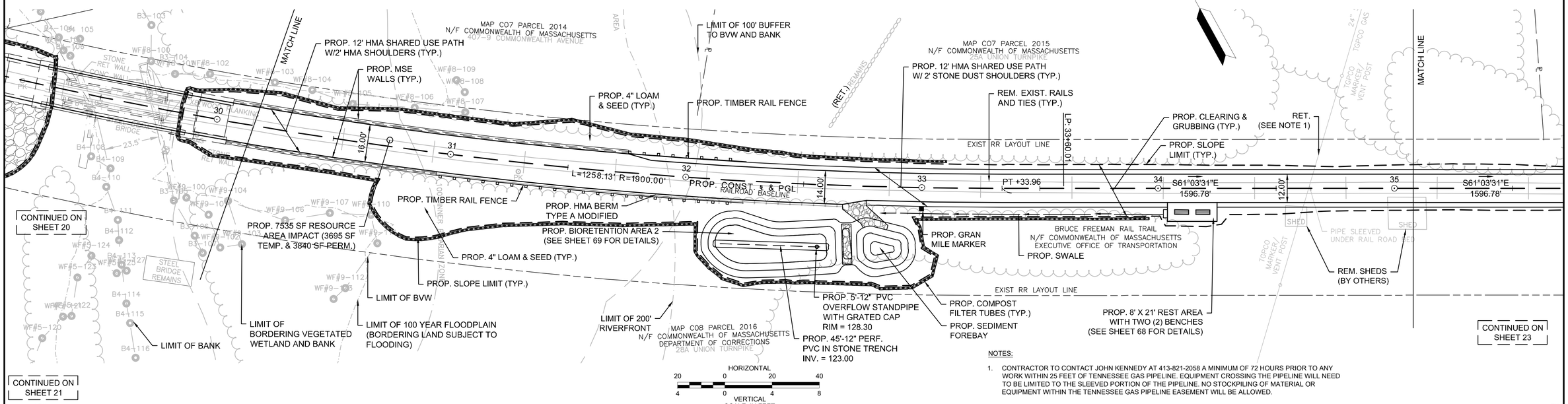

NOTES:

1. CONTRACTOR TO CONTACT JOHN KENNEDY AT 413-821-2058 A MINIMUM OF 72 HOURS PRIOR TO ANY WORK WITHIN 25 FEET OF TENNESSEE GAS PIPELINE. EQUIPMENT CROSSING THE PIPELINE WILL NEED TO BE LIMITED TO THE SLEEVED PORTION OF THE PIPELINE. NO STOCKPILING OF MATERIAL OR EQUIPMENT WITHIN THE TENNESSEE GAS PIPELINE EASEMENT WILL BE ALLOWED.

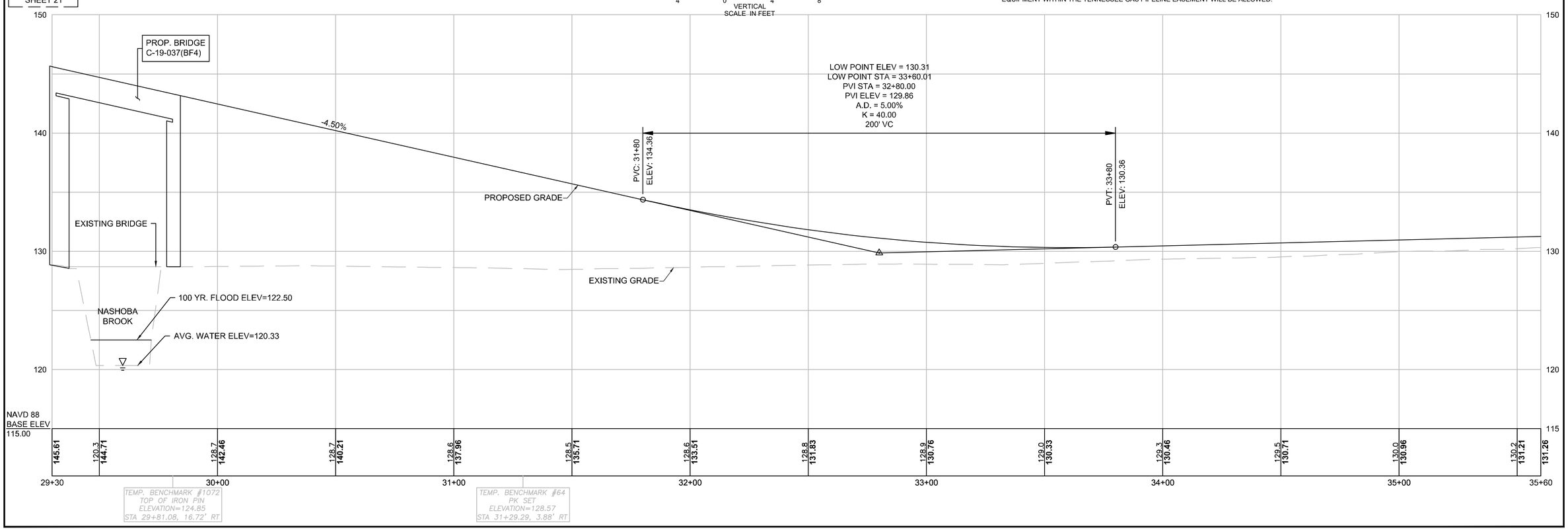

ACTON & CONCORD
BRUCE FREEMAN RAIL TRAIL PHASE 2B

STATE	FED. AID PROJ. NO.	SHEET NO.	TOTAL SHEETS
MA	-	23	146
PROJECT FILE NO.	606223		

CONSTRUCTION PLANS & PROFILES

606223_HD_(CO).DWG 28-Jun-2018

TIMBER RAIL FENCE DETAILS	HIGHWAY GUARD DETAILS	TRAFFIC SIGNAL CONDUIT	WATER SUPPLY ALTERATIONS	DRAINAGE DETAILS
NONE	NONE	NONE	NONE	SEE BELOW

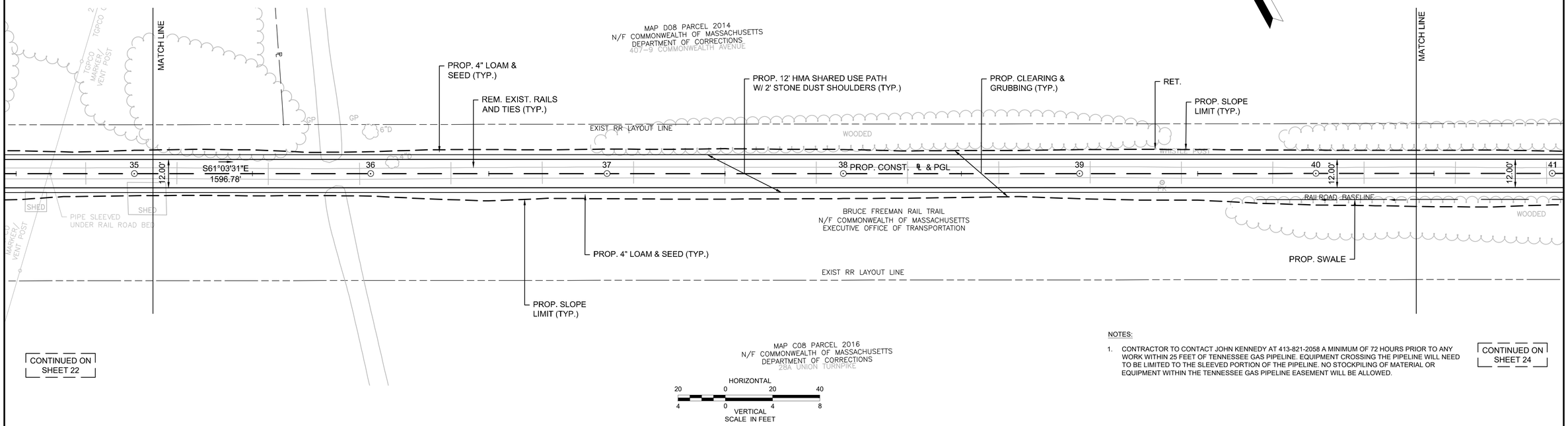

CONTINUED ON SHEET 22

NOTES:

1. CONTRACTOR TO CONTACT JOHN KENNEDY AT 413-821-2058 A MINIMUM OF 72 HOURS PRIOR TO ANY WORK WITHIN 25 FEET OF TENNESSEE GAS PIPELINE. EQUIPMENT CROSSING THE PIPELINE WILL NEED TO BE LIMITED TO THE SLEEVED PORTION OF THE PIPELINE. NO STOCKPILING OF MATERIAL OR EQUIPMENT WITHIN THE TENNESSEE GAS PIPELINE EASEMENT WILL BE ALLOWED.

CONTINUED ON SHEET 24

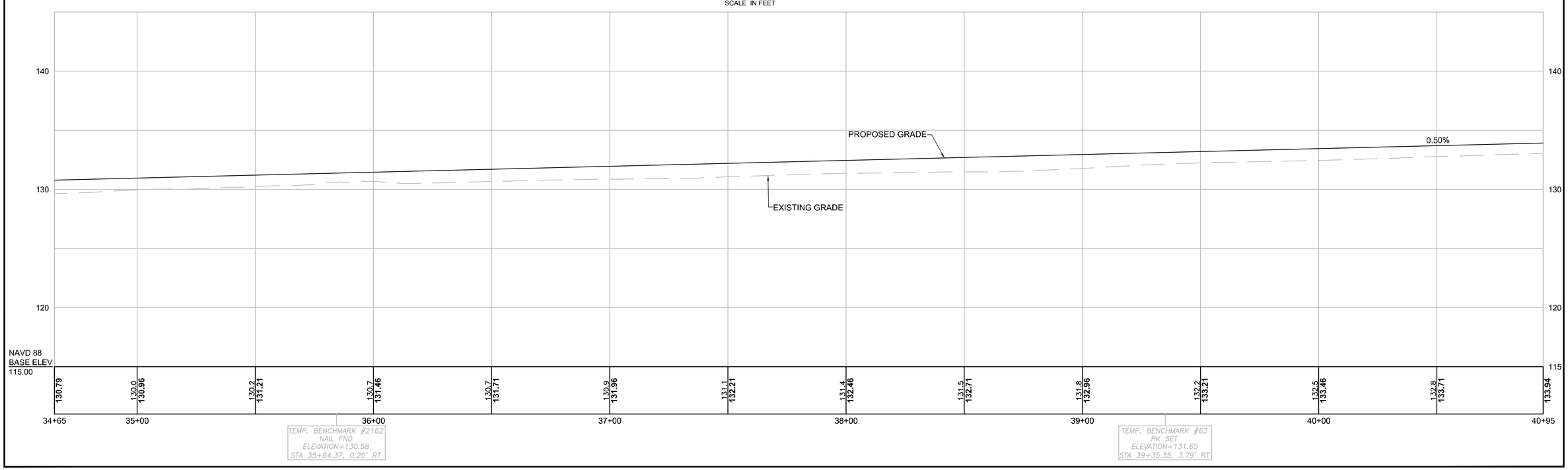

ACTON & CONCORD
BRUCE FREEMAN RAIL TRAIL PHASE 2B

STATE	FED. AID PROJ. NO.	SHEET NO.	TOTAL SHEETS
MA	-	24	146
PROJECT FILE NO.	606223		

CONSTRUCTION PLANS & PROFILES

606223_HD_(CO).DWG 26-Jun-2018

TIMBER RAIL FENCE DETAILS	HIGHWAY GUARD DETAILS	TRAFFIC SIGNAL CONDUIT	WATER SUPPLY ALTERATIONS	DRAINAGE DETAILS
STA. 43+75 LT TO STA. 47+75 LT - ITEM 655.01	NONE	NONE	NONE	SEE BELOW

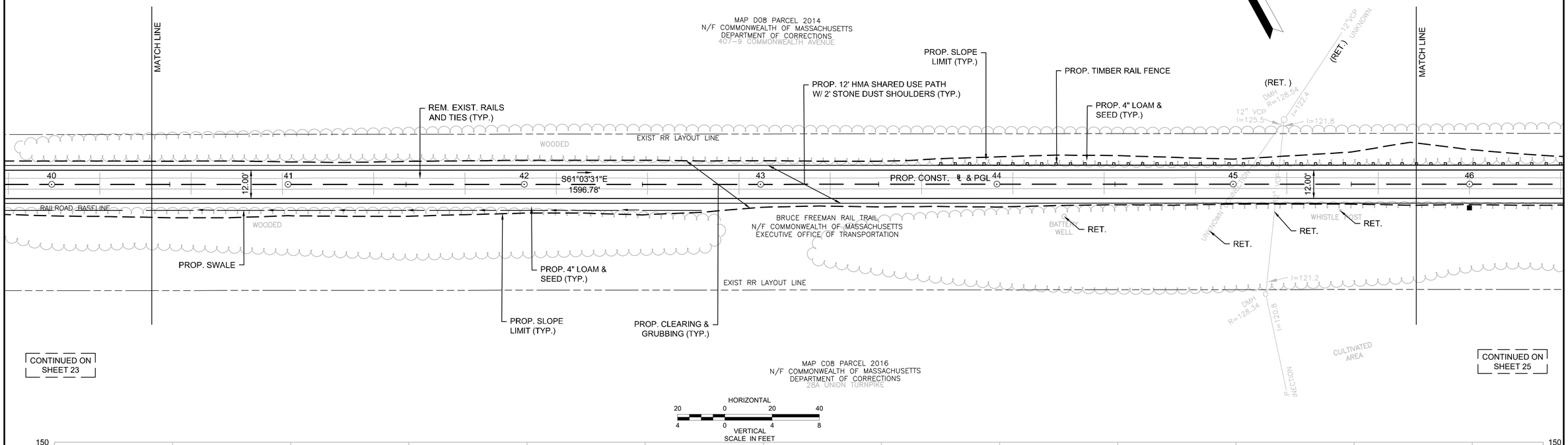

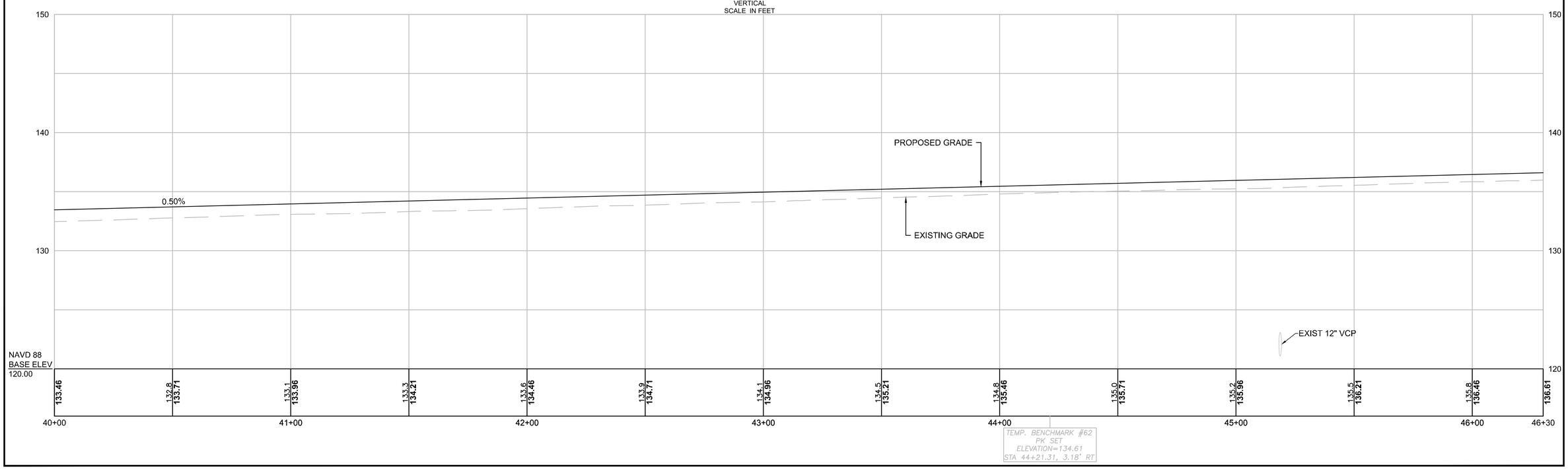

ACTON & CONCORD
BRUCE FREEMAN RAIL TRAIL PHASE 2B

STATE	FED. AID PROJ. NO.	SHEET NO.	TOTAL SHEETS
MA	-	25	146
PROJECT FILE NO.	606223		

CONSTRUCTION PLANS & PROFILES

606223_HD_(CO).DWG 26-Jun-2018

TIMBER RAIL FENCE DETAILS	HIGHWAY GUARD DETAILS	TRAFFIC SIGNAL CONDUIT	WATER SUPPLY ALTERATIONS	DRAINAGE DETAILS
STA. 43+75 LT TO STA. 47+75 LT - ITEM 655.01	NONE	NONE	NONE	SEE BELOW

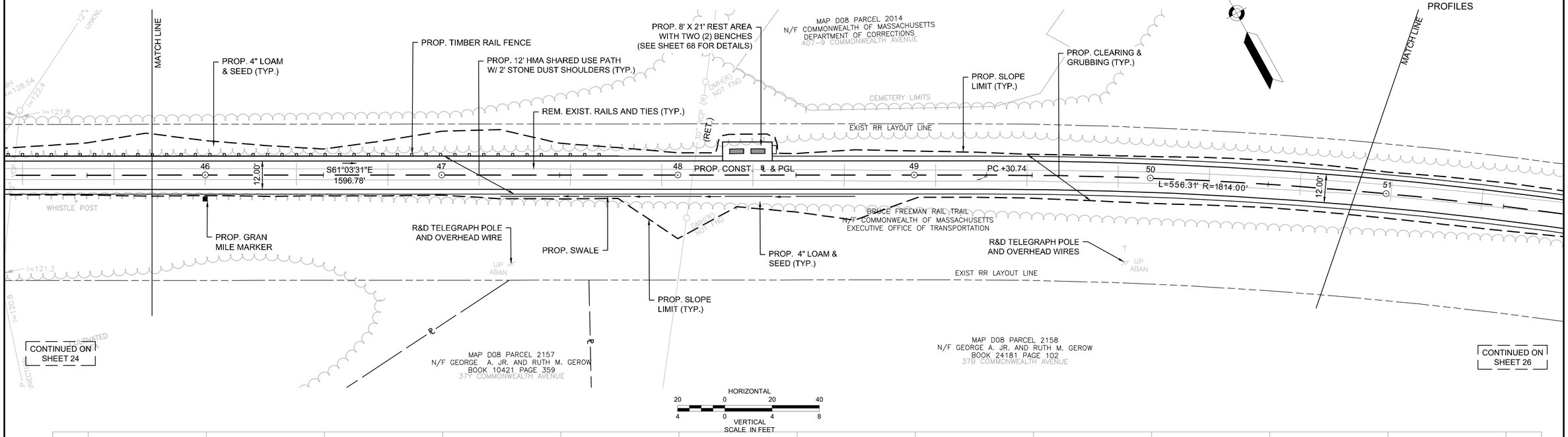

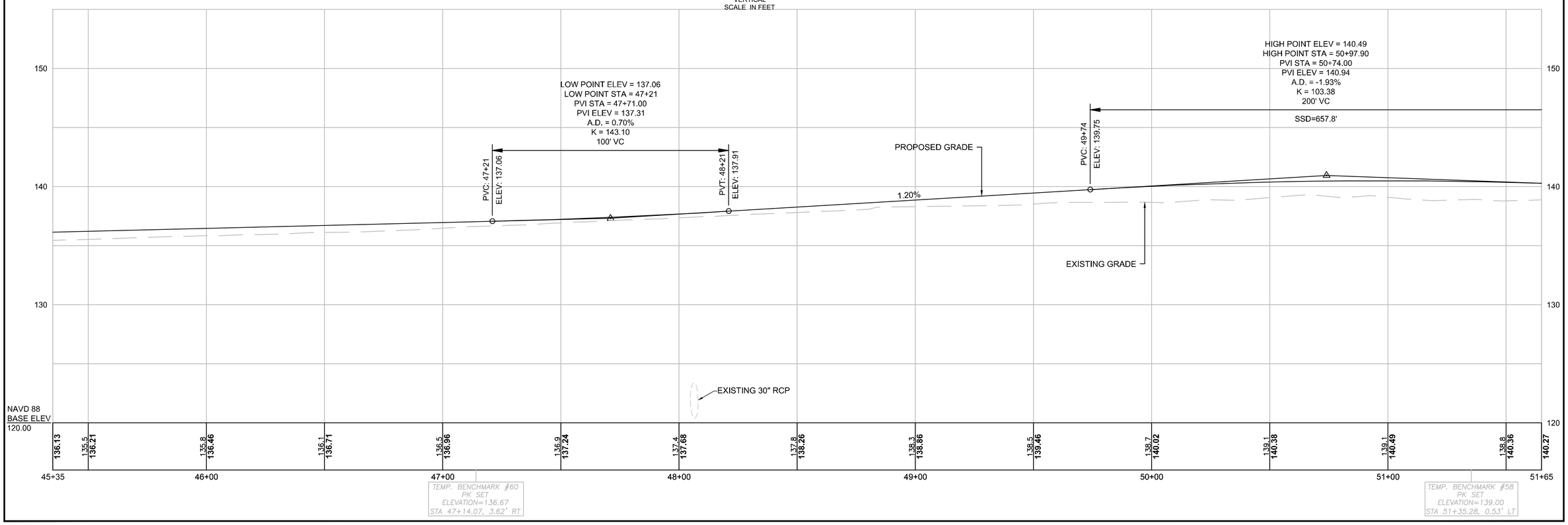

ACTON & CONCORD
BRUCE FREEMAN RAIL TRAIL PHASE 2B

STATE	FED. AID PROJ. NO.	SHEET NO.	TOTAL SHEETS
MA	-	26	146
PROJECT FILE NO.	606223		

CONSTRUCTION PLANS & PROFILES

606223_HD_(CO).DWG 26-Jun-2018

TIMBER RAIL FENCE DETAILS

NONE

HIGHWAY GUARD DETAILS

NONE

TRAFFIC SIGNAL CONDUIT

NONE

WATER SUPPLY ALTERATIONS

NONE

DRAINAGE DETAILS

NONE

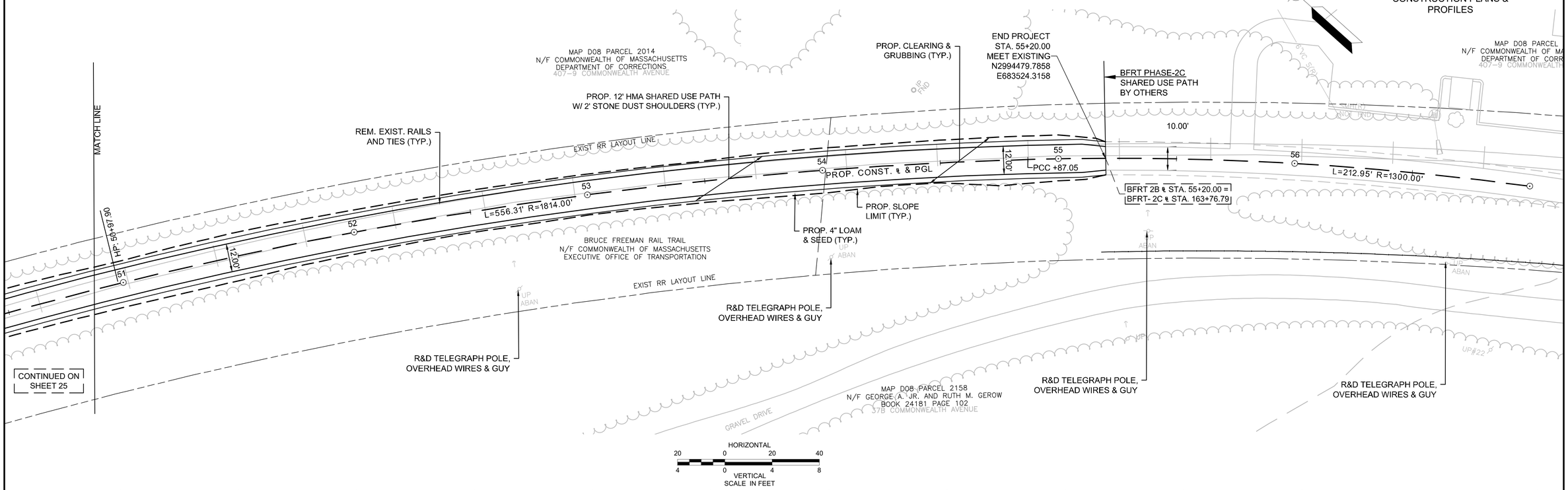

CONTINUED ON SHEET 25

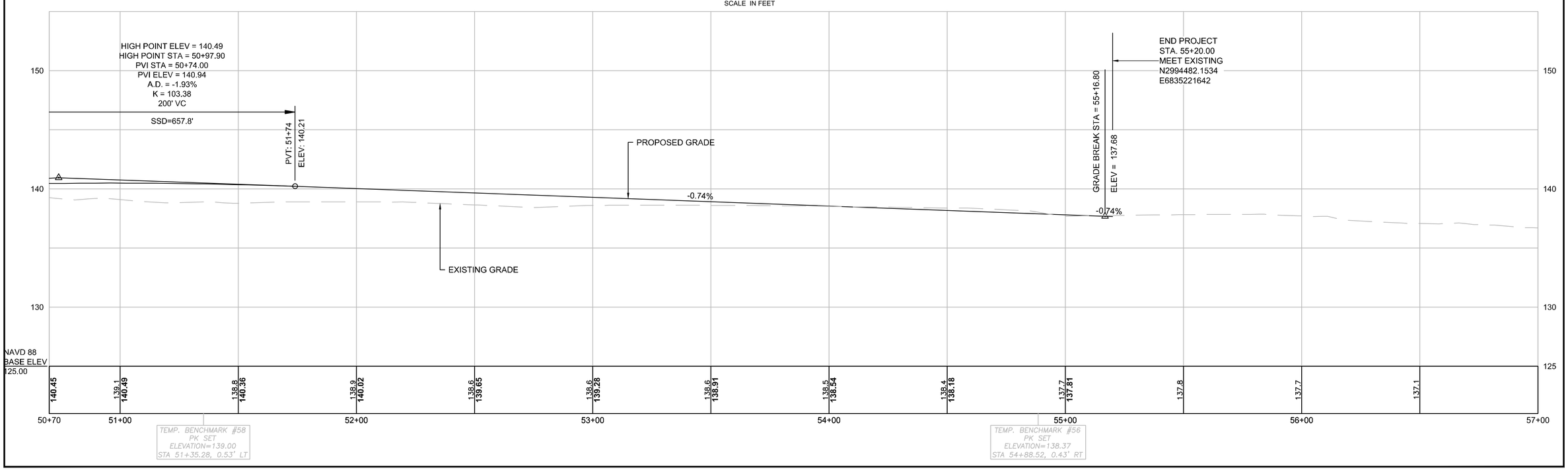

ACTON & CONCORD
BRUCE FREEMAN RAIL TRAIL PHASE 2B

STATE	FED. AID PROJ. NO.	SHEET NO.	TOTAL SHEETS
MA	-	27	146
PROJECT FILE NO.	606223		

CURB TIE & GRADING PLANS

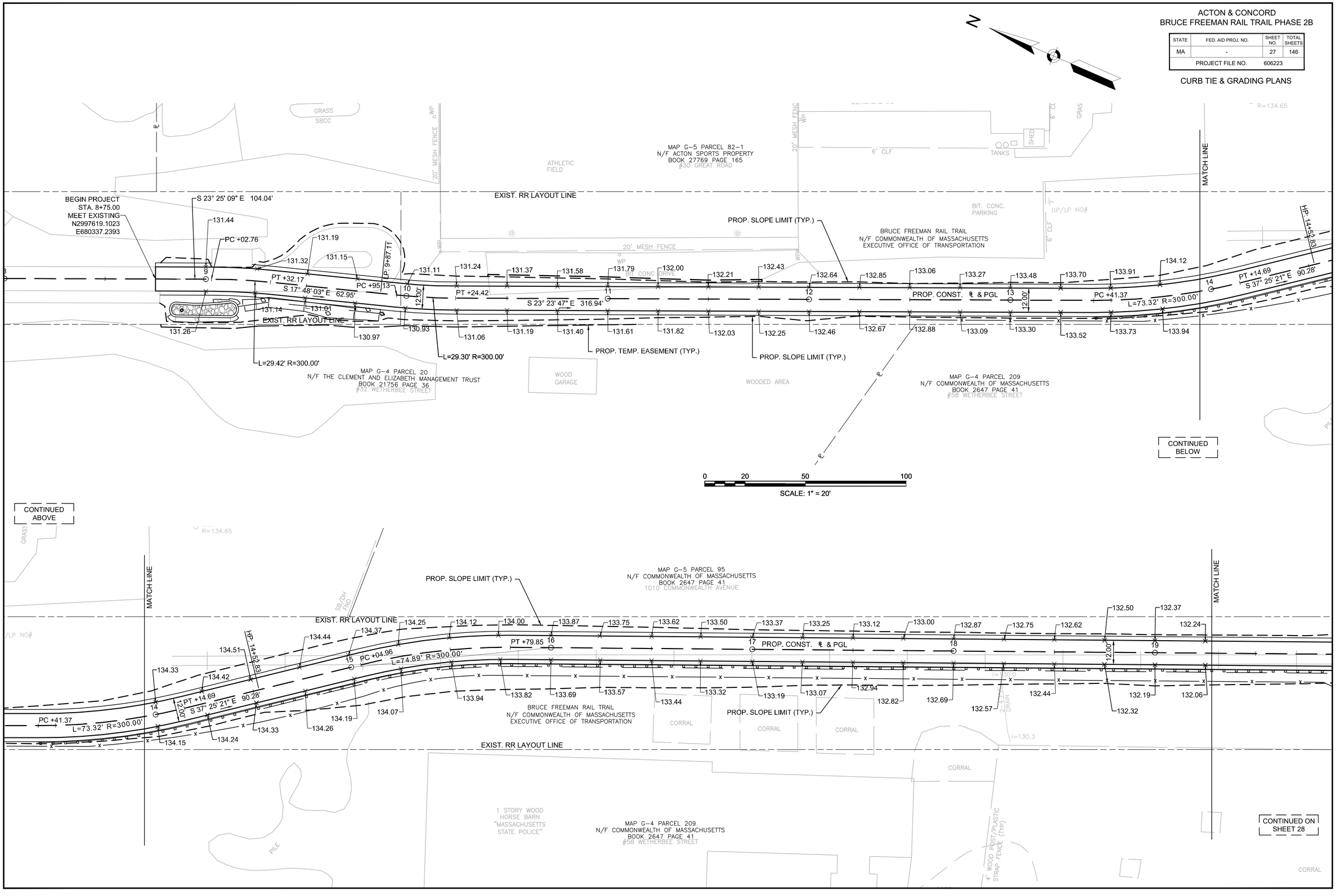

606223_HD_(CTG).DWG 28-Jun-2018

ACTON & CONCORD
BRUCE FREEMAN RAIL TRAIL PHASE 2B

STATE	FED. AID PROJ. NO.	SHEET NO.	TOTAL SHEETS
MA	-	28	146
PROJECT FILE NO.	606223		

CURB TIE & GRADING PLANS

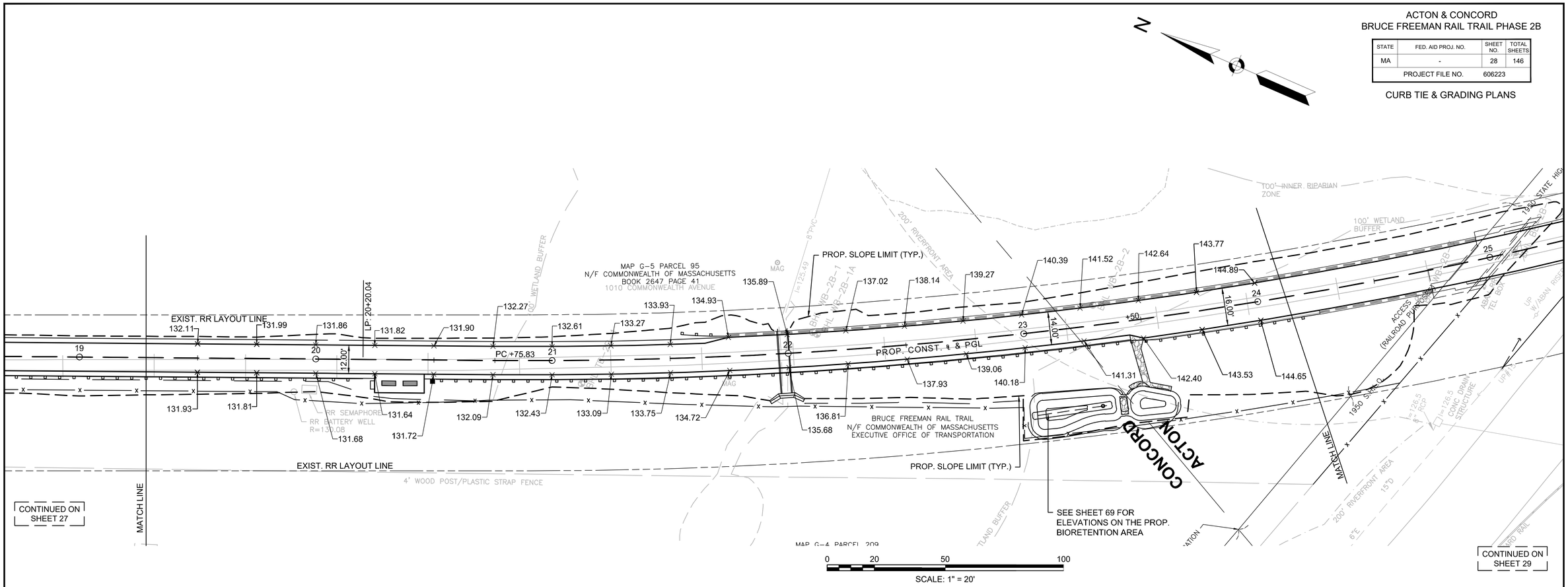

606223_HD_(CTG).DWG 28-Jun-2018

ACTON & CONCORD
BRUCE FREEMAN RAIL TRAIL PHASE 2B

STATE	FED. AID PROJ. NO.	SHEET NO.	TOTAL SHEETS
MA	-	29	146
PROJECT FILE NO.	606223		

CURB TIE & GRADING PLANS

606223_HD_(CTG).DWG 28-Jun-2018

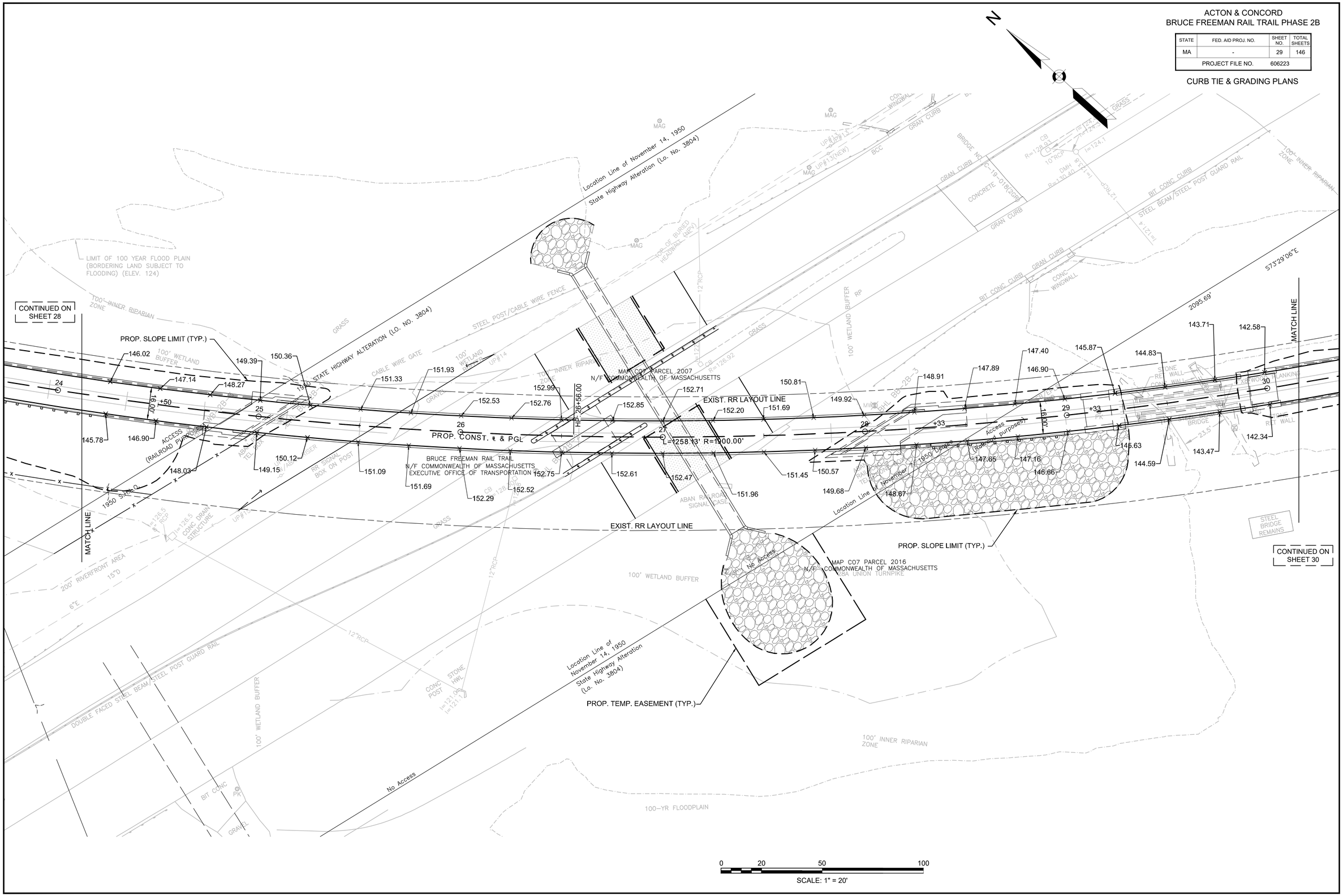

ACTON & CONCORD
BRUCE FREEMAN RAIL TRAIL PHASE 2B

STATE	FED. AID PROJ. NO.	SHEET NO.	TOTAL SHEETS
MA	-	30	146
PROJECT FILE NO.	606223		

CURB TIE & GRADING PLANS

606223_HD_CTG1.DWG 26-Jun-2018

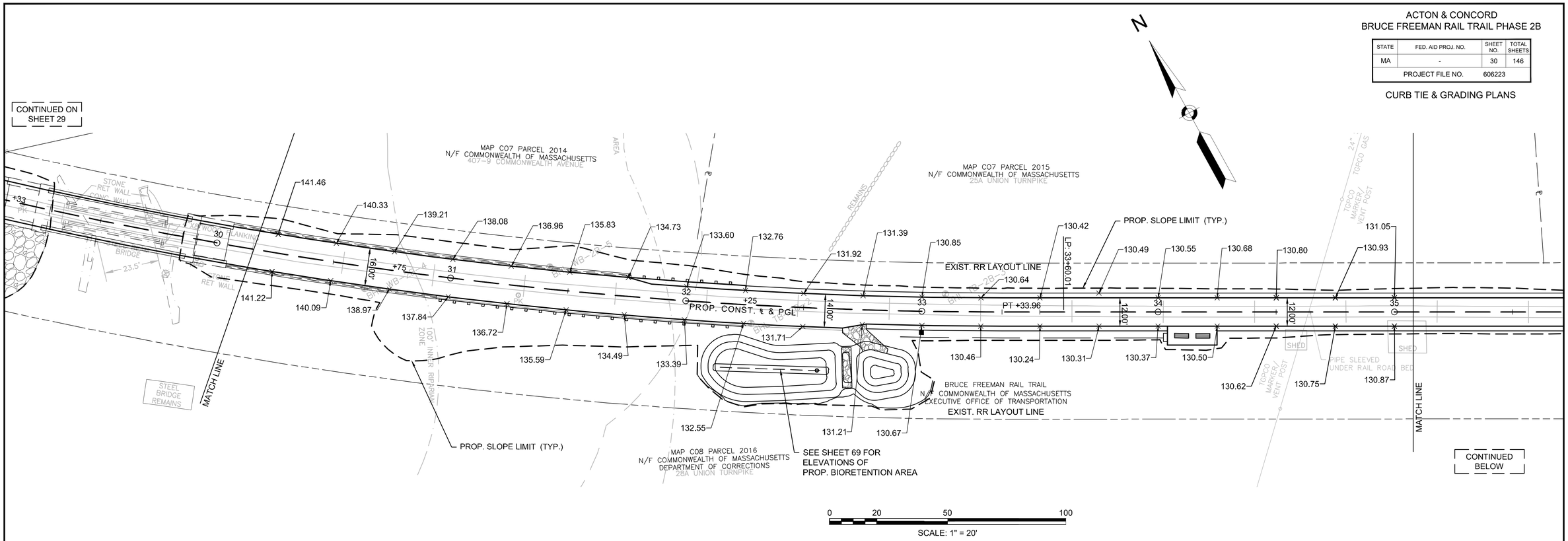

ACTON & CONCORD
BRUCE FREEMAN RAIL TRAIL PHASE 2B

STATE	FED. AID PROJ. NO.	SHEET NO.	TOTAL SHEETS
MA	-	31	146
PROJECT FILE NO.	606223		

CURB TIE & GRADING PLANS

606223_HD_(CTG).DWG 28-Jun-2018

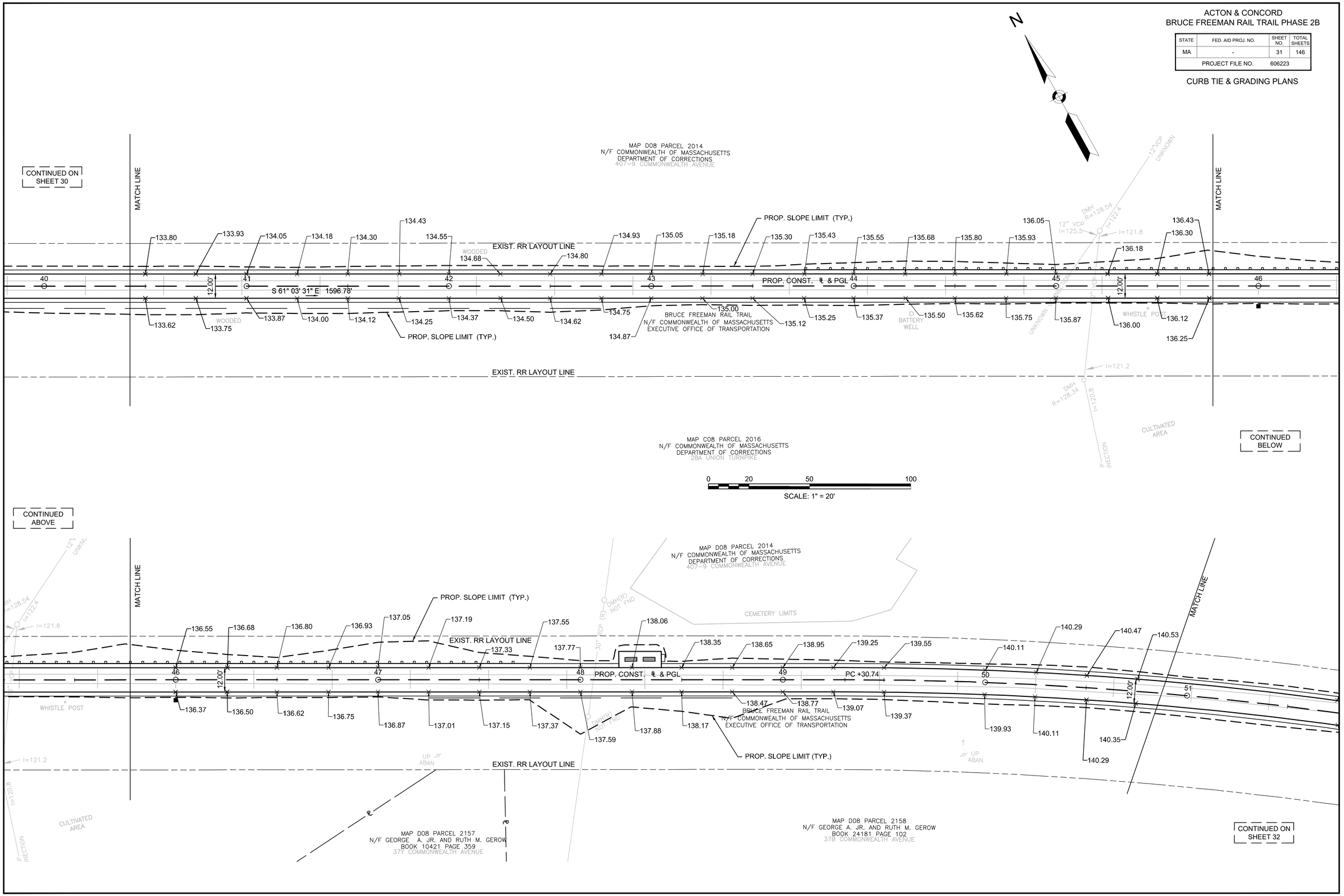

ACTON & CONCORD
BRUCE FREEMAN RAIL TRAIL PHASE 2B

STATE	FED. AID PROJ. NO.	SHEET NO.	TOTAL SHEETS
MA	-	32	146
PROJECT FILE NO.	606223		

CURB TIE & GRADING PLANS

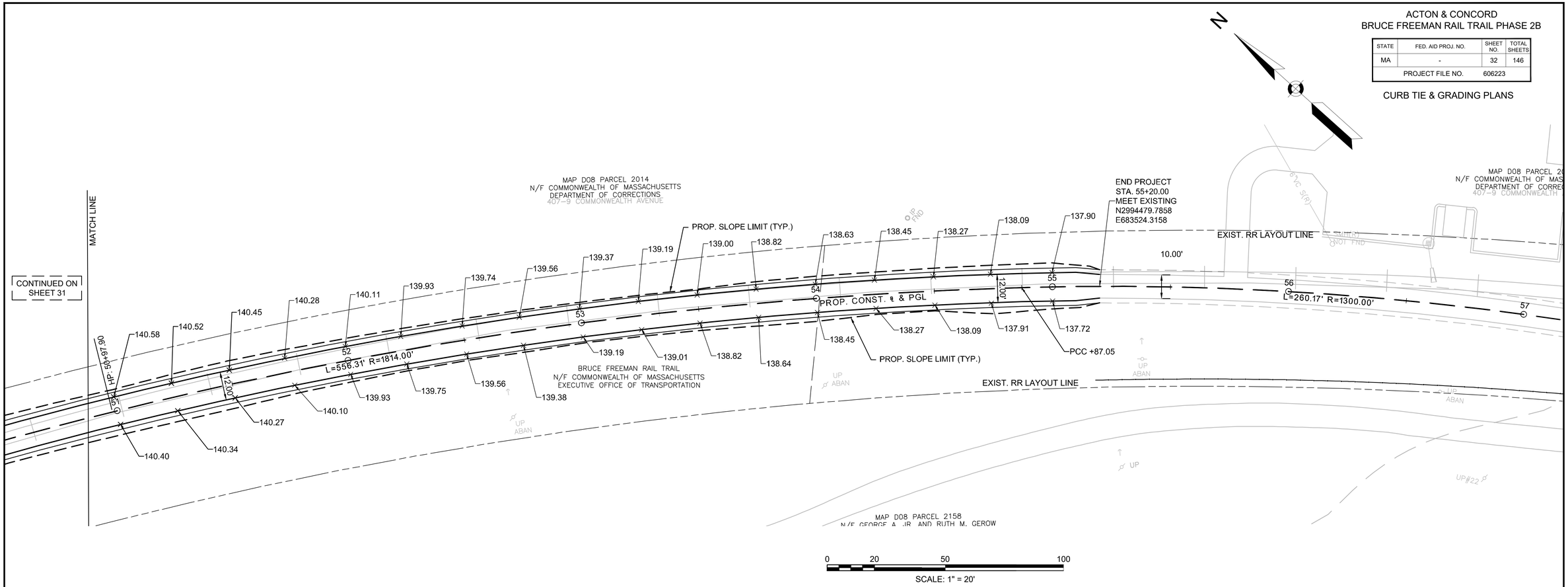

606223_HD_(CTG).DWG 26-Jun-2018

ACTON & CONCORD
BRUCE FREEMAN RAIL TRAIL PHASE 2B

STATE	FED. AID PROJ. NO.	SHEET NO.	TOTAL SHEETS
MA	-	33	146
PROJECT FILE NO.	606223		

TRAFFIC SIGN & PAVEMENT MARKINGS

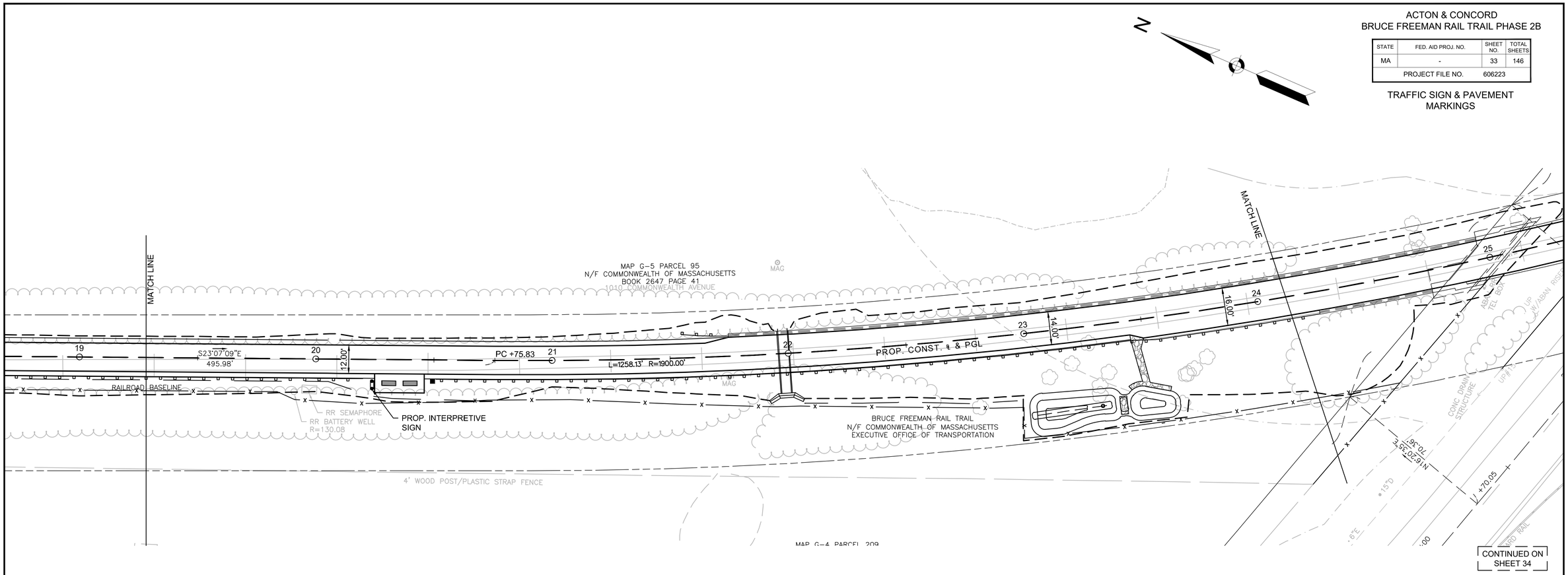

0 20 50 100
SCALE: 1" = 20'

606223_HD_(TSPM).DWG 26-Jun-2018

ACTON & CONCORD
BRUCE FREEMAN RAIL TRAIL PHASE 2B

STATE	FED. AID PROJ. NO.	SHEET NO.	TOTAL SHEETS
MA	-	34	146
PROJECT FILE NO.	606223		

TRAFFIC SIGN & PAVEMENT MARKINGS

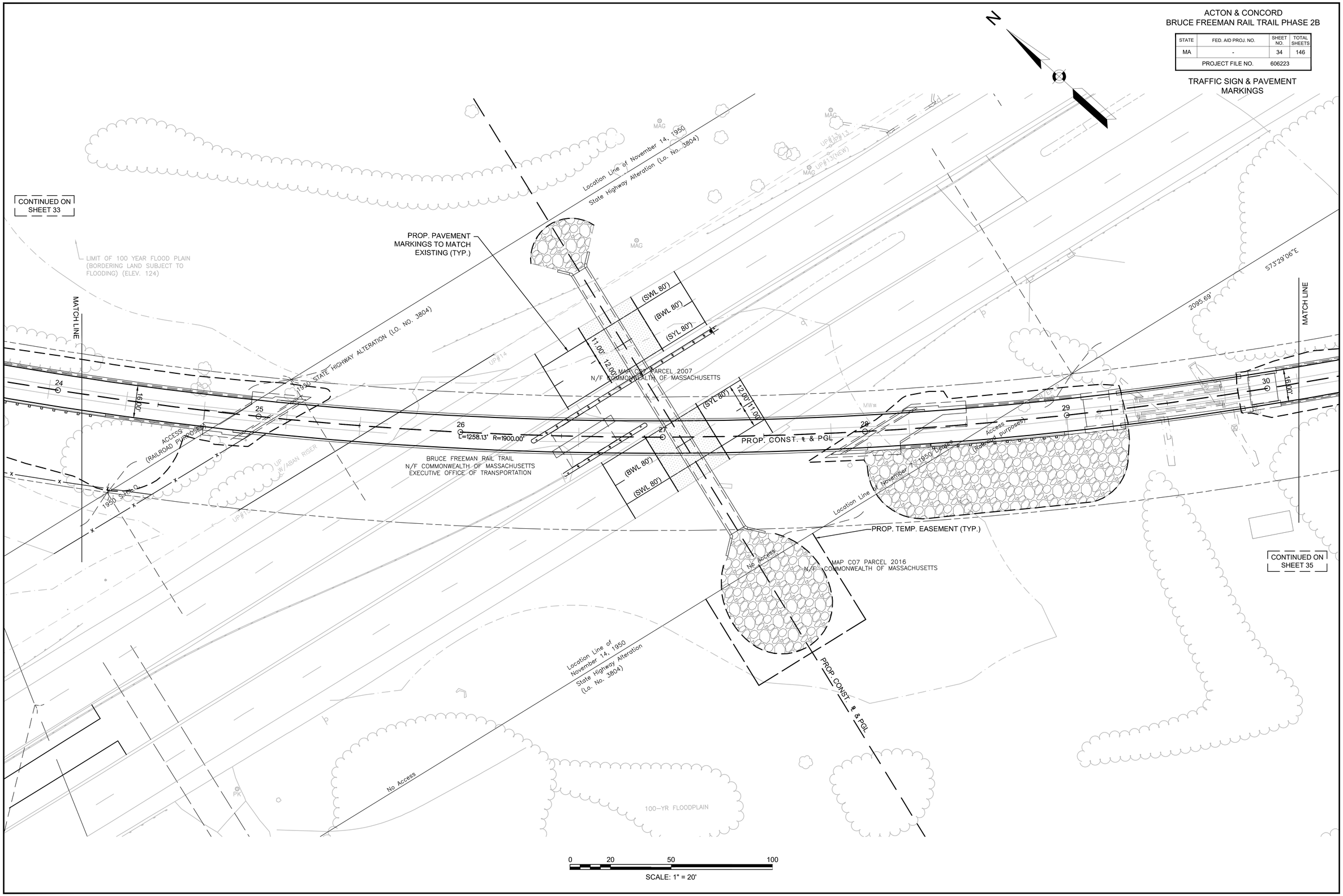

606223_HD_(TSPM).DWG 28-Jun-2018

ACTON & CONCORD
BRUCE FREEMAN RAIL TRAIL PHASE 2B

STATE	FED. AID PROJ. NO.	SHEET NO.	TOTAL SHEETS
MA	-	35	146
PROJECT FILE NO.	606223		

TRAFFIC SIGN & PAVEMENT MARKINGS

606223_HD_(TSPM).DWG 26-Jun-2018

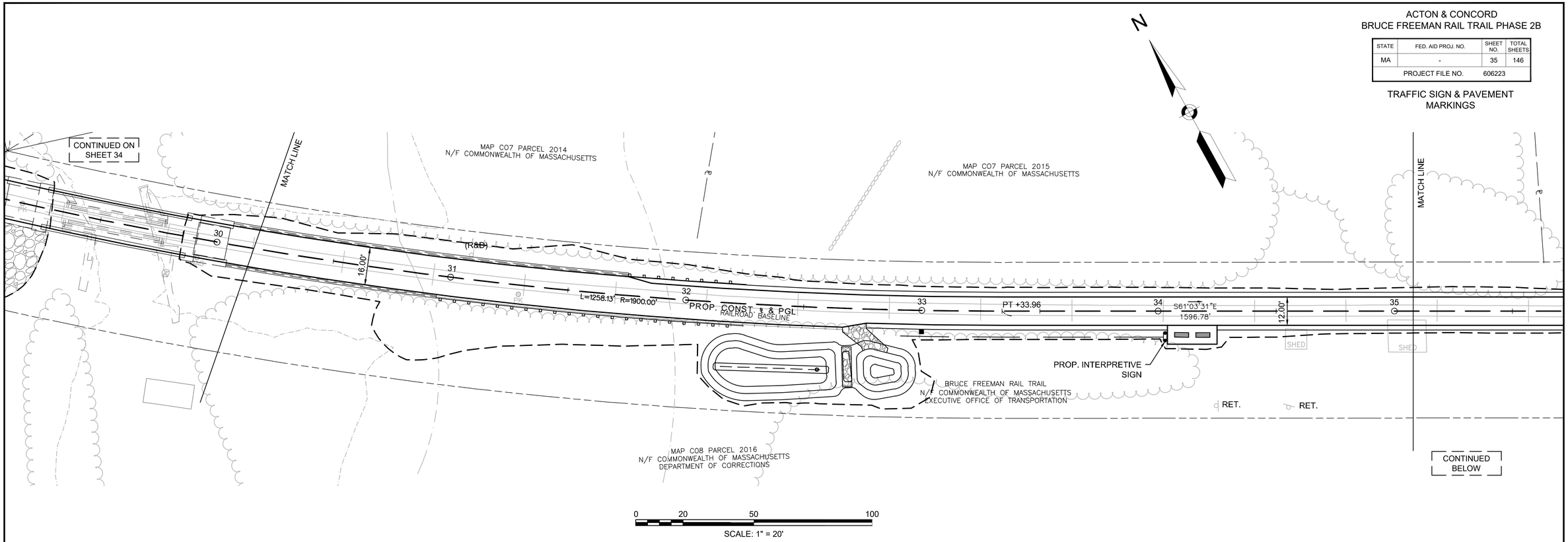

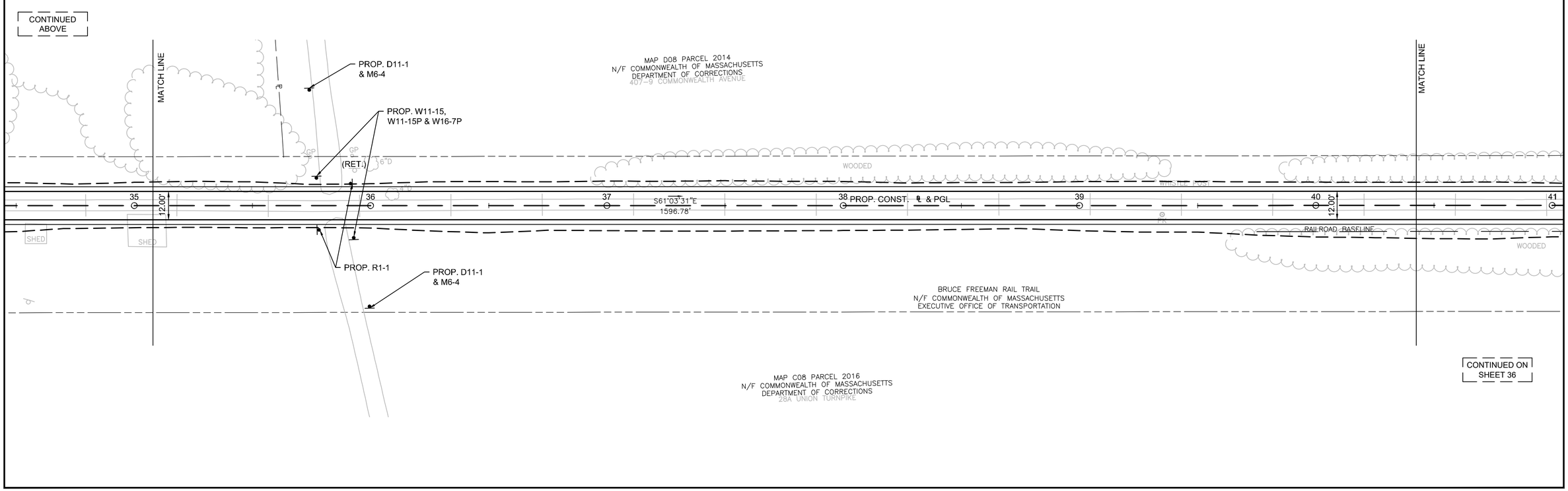

ACTON & CONCORD
BRUCE FREEMAN RAIL TRAIL PHASE 2B

STATE	FED. AID PROJ. NO.	SHEET NO.	TOTAL SHEETS
MA	-	36	146
PROJECT FILE NO.	606223		

TRAFFIC SIGN & PAVEMENT MARKINGS

606223_HD_(TSPM).DWG 26-Jun-2018

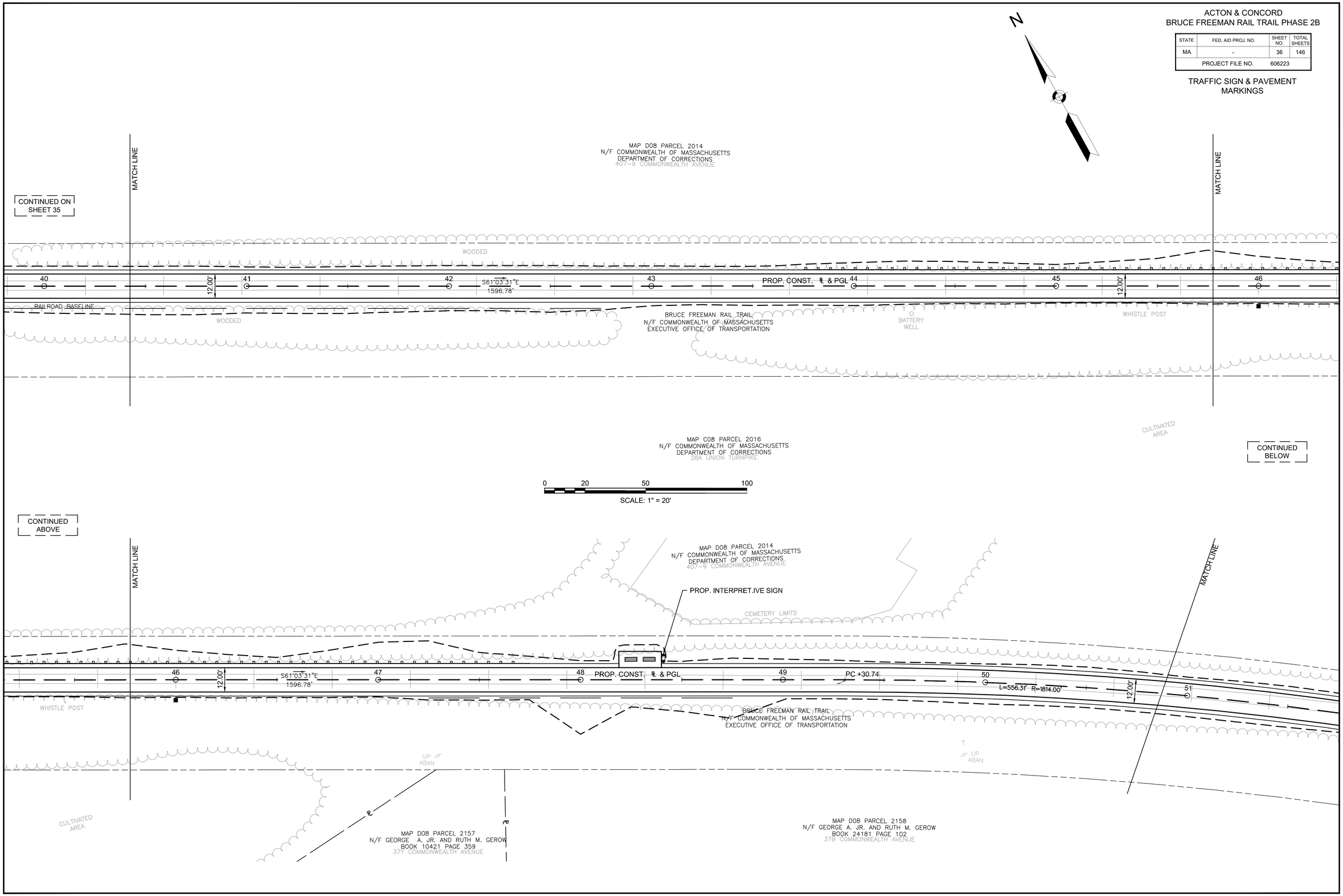

ACTON & CONCORD
BRUCE FREEMAN RAIL TRAIL PHASE 2B

STATE	FED. AID PROJ. NO.	SHEET NO.	TOTAL SHEETS
MA	-	37	146
PROJECT FILE NO.	606223		

TRAFFIC SIGN SUMMARY SHEET

IDENTIFI-CATION NUMBER	SIZE OF SIGN		TEXT	TEXT DIMENSIONS (INCHES)		NUMBER OF SIGNS REQUIRED	COLOR			POST SIZE AND NUMBER REQUIRED	UNIT AREA IN SQUARE FEET	AREA IN SQUARE FEET
	WIDTH	HEIGHT		LETTER HEIGHT	VERTICAL SPACING		BACK-GROUND	LEGEND	BORDER			
R1-1	30"	30"		MUTCD STANDARD		2	RED	WHITE	WHITE	P5 (2 REQ'D)	6.25	12.50
W11-15	30"	30"		MUTCD STANDARDS		2	YELLOW	BLACK	BLACK	P5 (2 REQ'D)	6.25	12.50
W11-15P	24"	18"		MUTCD STANDARDS		2	YELLOW	BLACK	BLACK	MNT W/ W11-15	3.00	6.00
W16-7P	24"	12"		MUTCD STANDARDS		2	YELLOW	BLACK	BLACK	MNT W/ W11-15	2.00	4.00
M6-4	21"	15"		MUTCD STANDARDS		2	GREEN	WHITE	WHITE	MNT W/ D11-1	2.19	4.38
D11-1	24"	18"		MUTCD STANDARDS		2	GREEN	WHITE	WHITE	P5 (2 REQ'D)	3.00	6.00

606223_HD_(SS).DWG Plotted on 26-Jun-2018 12:03 PM

ACTON & CONCORD
BRUCE FREEMAN RAIL TRAIL PHASE 2B

STATE	FED. AID PROJ. NO.	SHEET NO.	TOTAL SHEETS
MA	-	38	146
PROJECT FILE NO.	606223		

CONSTRUCTION STAGING PLANS
STAGE 1

606223_HD_(STAGING).DWG Plotted on 26-Jun-2018 12:04 PM

TRAFFIC MANAGEMENT LEGEND

- CONSTRUCTION ZONE
- WORK AREA
- DIRECTION OF TRAVEL
- REFLECTORIZED DRUM OR CONE
- A — REFLECTORIZED DRUM WITH TYPE 'A' FLASHING WARNING LIGHT (FIRST 10 DRUMS)
- P / — POLICE OFFICER OR FLAGGER CONTROL
- PORTABLE TYPE III BARRICADE (4' WIDE, MIN.)
- FLASHING ARROW BOARD (30"x 60" STD. SIZE WITH 13 LAMPS, MIN.)
- TEMPORARY BARRIER
- TEMPORARY IMPACT ATTENUATOR
- PAVEMENT MARKINGS TO COVER OR REMOVE
- PORTABLE CHANGEABLE MESSAGE SIGN
- MOVABLE IMPACT ATTENUATOR

SUGGESTED STAGE 1 SEQUENCE OF CONSTRUCTION

1. INSTALL TEMPORARY SIGNS, DRUMS AND OTHER TRAFFIC CONTROL DEVICES AS REQUIRED BY THE ENGINEER.
2. REMOVE EXISTING PAVEMENT MARKINGS THAT ARE IN CONFLICT WITH TEMPORARY SETUP.
3. INSTALL TEMPORARY PAVEMENT MARKINGS.
4. REMOVE EXISTING MEDIAN AND CONSTRUCT TEMPORARY PAVEMENT FOR MEDIAN CROSSOVERS.

NOTES

1. REFER TO MEDIAN CROSSOVER DETAILS FOR CONSTRUCTION NOTATION.
2. THE CONTRACTOR SHALL USE STANDARD METHODS TO REMOVE EXISTING CONFLICTING PAVEMENT MARKINGS.
3. CONTRACTOR SHALL MAINTAIN ACCESS TO ALL BUSINESSES AND RESIDENCES AT ALL TIMES.

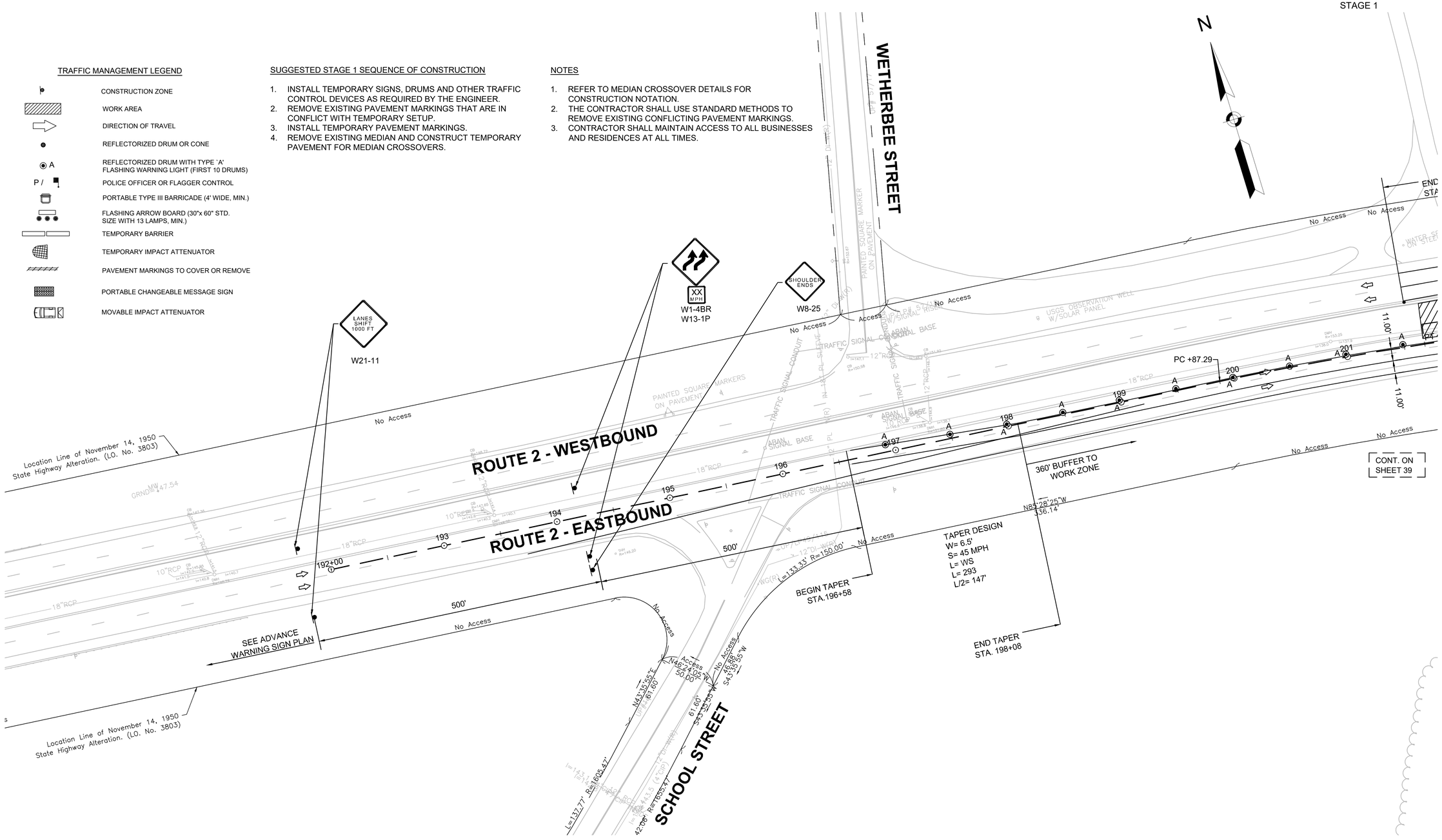

ACTON & CONCORD
BRUCE FREEMAN RAIL TRAIL PHASE 2B

STATE	FED. AID PROJ. NO.	SHEET NO.	TOTAL SHEETS
MA	-	39	146
PROJECT FILE NO.	606223		

CONSTRUCTION STAGING PLANS
STAGE 1

TRAFFIC MANAGEMENT LEGEND

- CONSTRUCTION ZONE
- WORK AREA
- DIRECTION OF TRAVEL
- REFLECTORIZED DRUM OR CONE
- A — REFLECTORIZED DRUM WITH TYPE 'A' FLASHING WARNING LIGHT (FIRST 10 DRUMS)
- P / — POLICE OFFICER OR FLAGGER CONTROL
- PORTABLE TYPE III BARRICADE (4' WIDE, MIN.)
- FLASHING ARROW BOARD (30"x 60" STD. SIZE WITH 13 LAMPS, MIN.)
- TEMPORARY BARRIER
- TEMPORARY IMPACT ATTENUATOR
- PAVEMENT MARKINGS TO COVER OR REMOVE
- PORTABLE CHANGEABLE MESSAGE SIGN
- MOVABLE IMPACT ATTENUATOR

SUGGESTED STAGE 1 SEQUENCE OF CONSTRUCTION

1. INSTALL TEMPORARY SIGNS, DRUMS AND OTHER TRAFFIC CONTROL DEVICES AS REQUIRED BY THE ENGINEER.
2. REMOVE EXISTING PAVEMENT MARKINGS THAT ARE IN CONFLICT WITH TEMPORARY SETUP.
3. INSTALL TEMPORARY PAVEMENT MARKINGS.
4. REMOVE EXISTING MEDIAN AND CONSTRUCT TEMPORARY PAVEMENT FOR MEDIAN CROSSOVERS.

NOTES

1. REFER TO MEDIAN CROSSOVER DETAILS FOR CONSTRUCTION NOTATION.
2. THE CONTRACTOR SHALL USE STANDARD METHODS TO REMOVE EXISTING CONFLICTING PAVEMENT MARKINGS.
3. CONTRACTOR SHALL MAINTAIN ACCESS TO ALL BUSINESSES AND RESIDENCES AT ALL TIMES.

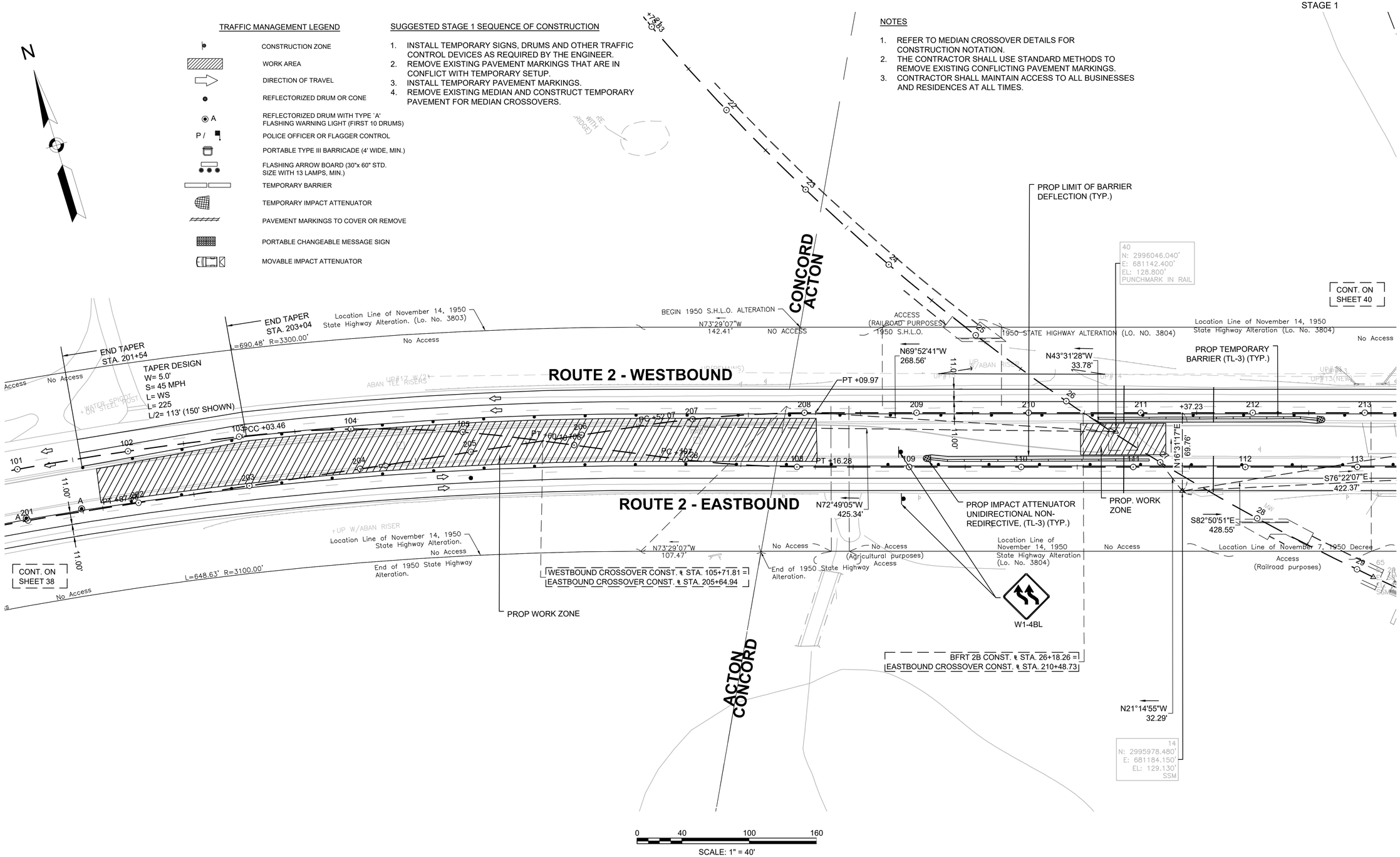

606223_HD_(STAGING).DWG Plotted on 26-Jun-2018 12:04 PM

ACTON & CONCORD
BRUCE FREEMAN RAIL TRAIL PHASE 2B

STATE	FED. AID PROJ. NO.	SHEET NO.	TOTAL SHEETS
MA	-	40	146
PROJECT FILE NO.	606223		

CONSTRUCTION STAGING PLANS
STAGE 1

TRAFFIC MANAGEMENT LEGEND

- CONSTRUCTION ZONE
- WORK AREA
- DIRECTION OF TRAVEL
- REFLECTORIZED DRUM OR CONE
- A — REFLECTORIZED DRUM WITH TYPE 'A' FLASHING WARNING LIGHT (FIRST 10 DRUMS)
- P / — POLICE OFFICER OR FLAGGER CONTROL
- PORTABLE TYPE III BARRICADE (4' WIDE, MIN.)
- FLASHING ARROW BOARD (30"x 60" STD. SIZE WITH 13 LAMPS, MIN.)
- TEMPORARY BARRIER
- TEMPORARY IMPACT ATTENUATOR
- PAVEMENT MARKINGS TO COVER OR REMOVE
- PORTABLE CHANGEABLE MESSAGE SIGN
- MOVABLE IMPACT ATTENUATOR

SUGGESTED STAGE 1 SEQUENCE OF CONSTRUCTION

1. INSTALL TEMPORARY SIGNS, DRUMS AND OTHER TRAFFIC CONTROL DEVICES AS REQUIRED BY THE ENGINEER.
2. REMOVE EXISTING PAVEMENT MARKINGS THAT ARE IN CONFLICT WITH TEMPORARY SETUP.
3. INSTALL TEMPORARY PAVEMENT MARKINGS.
4. REMOVE EXISTING MEDIAN AND CONSTRUCT TEMPORARY PAVEMENT FOR MEDIAN CROSSOVERS.

NOTES

1. REFER TO MEDIAN CROSSOVER DETAILS FOR CONSTRUCTION NOTATION.
2. THE CONTRACTOR SHALL USE STANDARD METHODS TO REMOVE EXISTING CONFLICTING PAVEMENT MARKINGS.
3. CONTRACTOR SHALL MAINTAIN ACCESS TO ALL BUSINESSES AND RESIDENCES AT ALL TIMES.

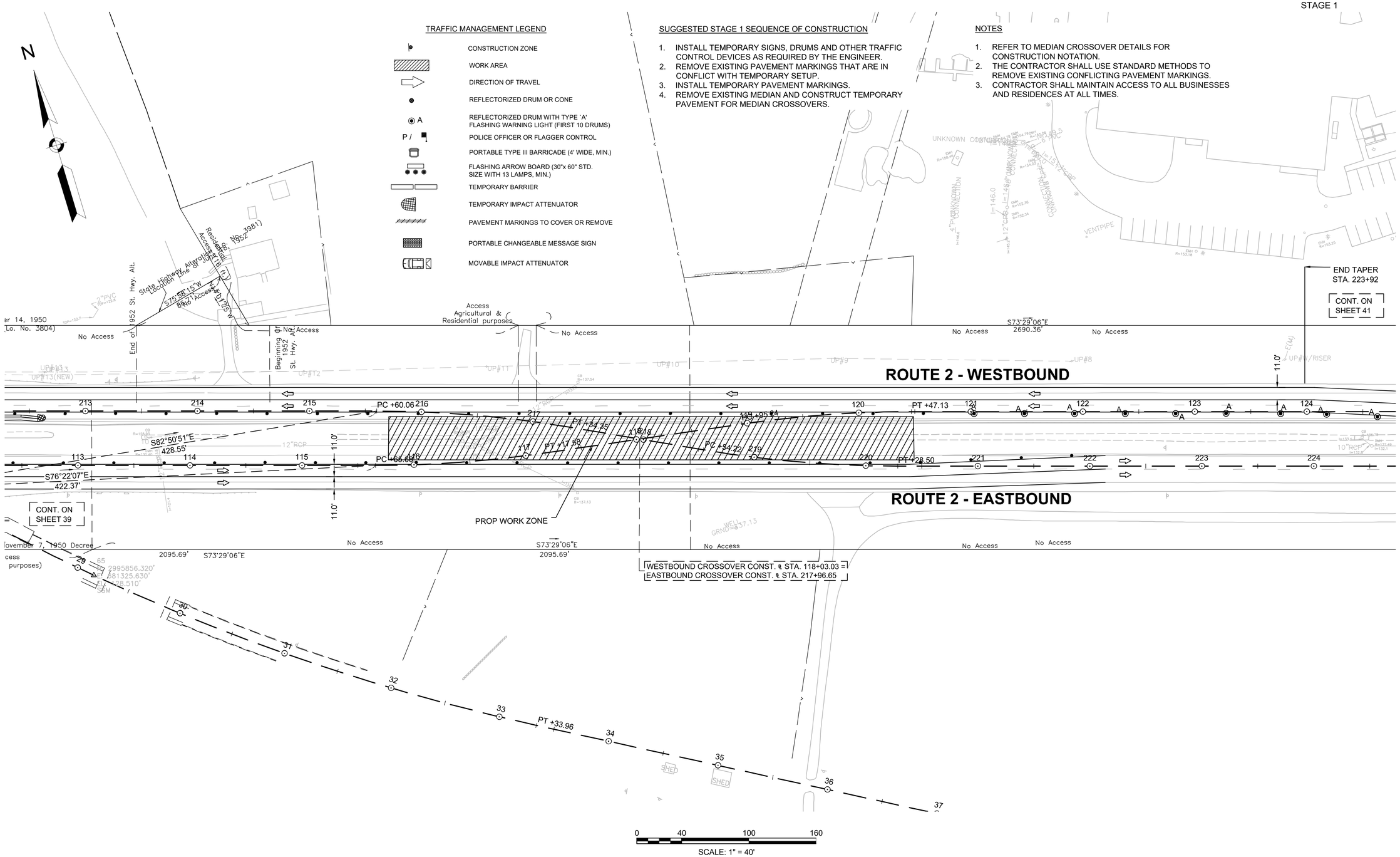

606223_HD_(STAGING).DWG Plotted on 26-Jun-2018 12:04 PM

ACTON & CONCORD
BRUCE FREEMAN RAIL TRAIL PHASE 2B

STATE	FED. AID PROJ. NO.	SHEET NO.	TOTAL SHEETS
MA	-	41	146
PROJECT FILE NO.	606223		

CONSTRUCTION STAGING PLANS
STAGE 1

TRAFFIC MANAGEMENT LEGEND

- CONSTRUCTION ZONE
- WORK AREA
- DIRECTION OF TRAVEL
- REFLECTORIZED DRUM OR CONE
- REFLECTORIZED DRUM WITH TYPE 'A' FLASHING WARNING LIGHT (FIRST 10 DRUMS)
- POLICE OFFICER OR FLAGGER CONTROL
- PORTABLE TYPE III BARRICADE (4' WIDE, MIN.)
- FLASHING ARROW BOARD (30"x 60" STD. SIZE WITH 13 LAMPS, MIN.)
- TEMPORARY BARRIER
- TEMPORARY IMPACT ATTENUATOR
- PAVEMENT MARKINGS TO COVER OR REMOVE
- PORTABLE CHANGEABLE MESSAGE SIGN
- MOVABLE IMPACT ATTENUATOR

SUGGESTED STAGE 1 SEQUENCE OF CONSTRUCTION

1. INSTALL TEMPORARY SIGNS, DRUMS AND OTHER TRAFFIC CONTROL DEVICES AS REQUIRED BY THE ENGINEER.
2. REMOVE EXISTING PAVEMENT MARKINGS THAT ARE IN CONFLICT WITH TEMPORARY SETUP.
3. INSTALL TEMPORARY PAVEMENT MARKINGS.
4. REMOVE EXISTING MEDIAN AND CONSTRUCT TEMPORARY PAVEMENT FOR MEDIAN CROSSOVERS.

NOTES

1. REFER TO MEDIAN CROSSOVER DETAILS FOR CONSTRUCTION NOTATION.
2. THE CONTRACTOR SHALL USE STANDARD METHODS TO REMOVE EXISTING CONFLICTING PAVEMENT MARKINGS.
3. CONTRACTOR SHALL MAINTAIN ACCESS TO ALL BUSINESSES AND RESIDENCES AT ALL TIMES.

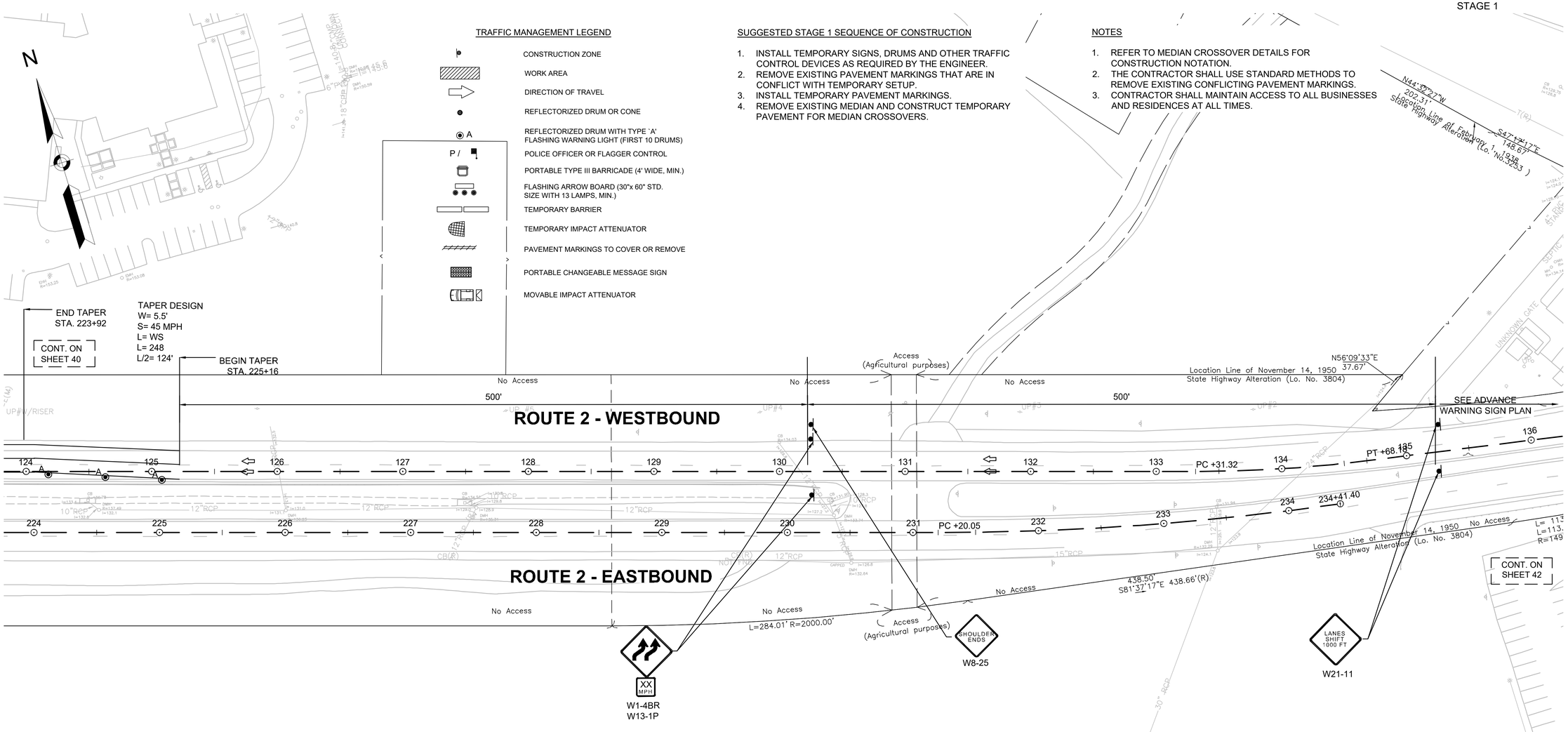

0 40 100 160
SCALE: 1" = 40'

606223_HD_(STAGING).DWG Plotted on 26-Jun-2018 12:04 PM

ACTON & CONCORD
BRUCE FREEMAN RAIL TRAIL PHASE 2B

STATE	FED. AID PROJ. NO.	SHEET NO.	TOTAL SHEETS
MA	-	42	146
PROJECT FILE NO.	606223		

CONSTRUCTION STAGING PLANS
STAGE 2

606223_HD_(STAGING).DWG Plotted on 26-Jun-2018 12:05 PM

TRAFFIC MANAGEMENT LEGEND

- CONSTRUCTION ZONE
- WORK AREA
- DIRECTION OF TRAVEL
- REFLECTORIZED DRUM OR CONE
- A — REFLECTORIZED DRUM WITH TYPE 'A' FLASHING WARNING LIGHT (FIRST 10 DRUMS)
- P / — POLICE OFFICER OR FLAGGER CONTROL
- PORTABLE TYPE III BARRICADE (4' WIDE, MIN.)
- FLASHING ARROW BOARD (30"x 60" STD. SIZE WITH 13 LAMPS, MIN.)
- TEMPORARY BARRIER
- TEMPORARY IMPACT ATTENUATOR
- PAVEMENT MARKINGS TO COVER OR REMOVE
- PORTABLE CHANGEABLE MESSAGE SIGN
- MOVABLE IMPACT ATTENUATOR

SUGGESTED STAGE 2 SEQUENCE OF CONSTRUCTION

1. INSTALL TEMPORARY SIGNS, DRUMS AND OTHER TRAFFIC CONTROL DEVICES AS REQUIRED BY THE ENGINEER.
2. REMOVE EXISTING PAVEMENT MARKINGS THAT ARE IN CONFLICT WITH TEMPORARY SETUP.
3. INSTALL TEMPORARY PAVEMENT MARKINGS.
4. SHIFT TRAFFIC INTO NEW LANE CONFIGURATIONS UTILIZING THE NEWLY CONSTRUCTED HMA PAVEMENT IN THE MEDIAN FOR THE EASTBOUND CROSSOVERS.
5. INSTALL THE WILDLIFE CORRIDOR SECTIONS LOCATED IN THE EASTBOUND ROADWAY.

NOTES

1. REFER TO MEDIAN CROSSOVER DETAILS FOR CONSTRUCTION NOTATION.
2. THE CONTRACTOR SHALL USE STANDARD METHODS TO REMOVE EXISTING CONFLICTING PAVEMENT MARKINGS.
3. CONTRACTOR SHALL MAINTAIN ACCESS TO ALL BUSINESSES AND RESIDENCES AT ALL TIMES.

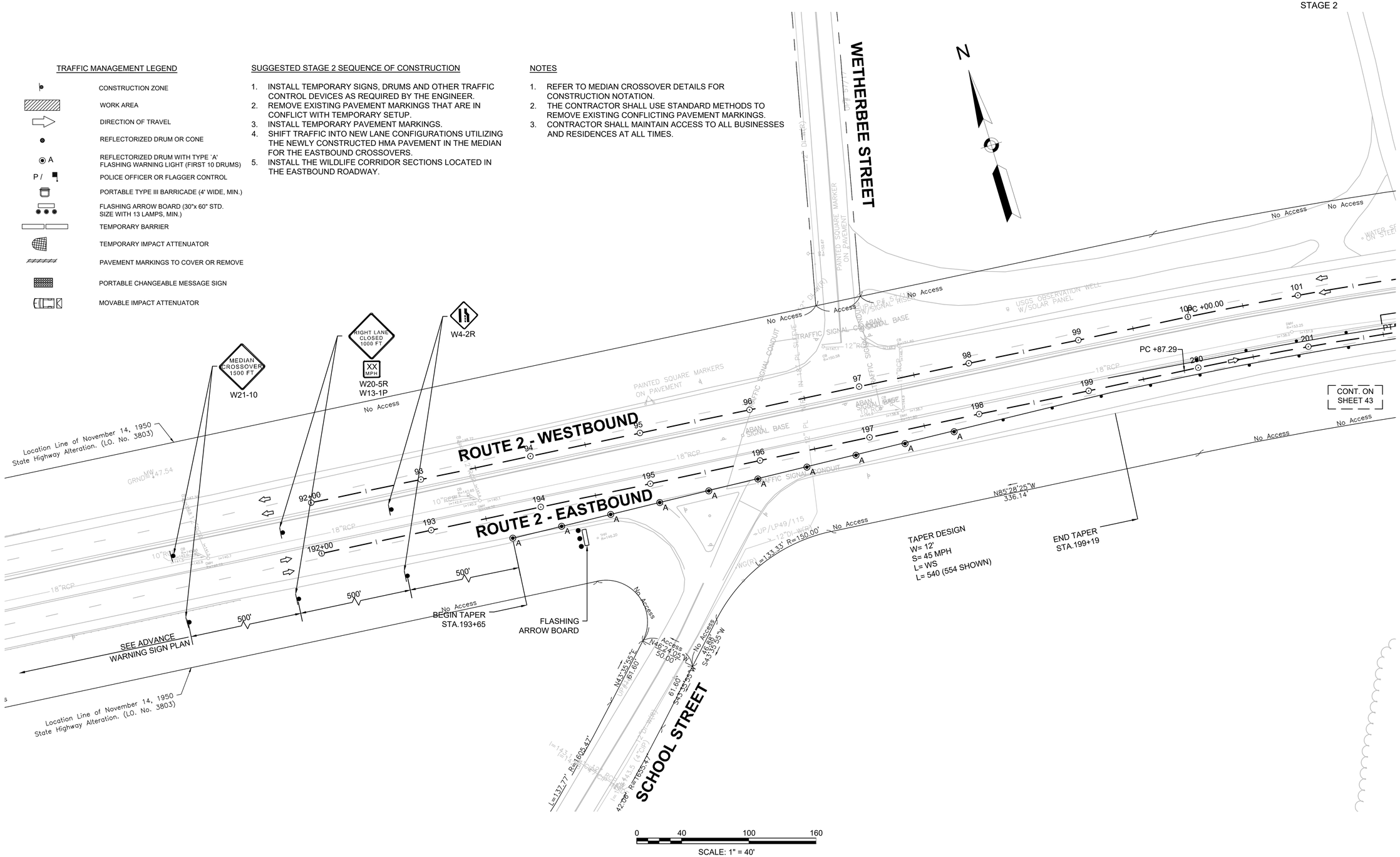

0 40 100 160
SCALE: 1" = 40'

ACTON & CONCORD
BRUCE FREEMAN RAIL TRAIL PHASE 2B

STATE	FED. AID PROJ. NO.	SHEET NO.	TOTAL SHEETS
MA	-	43	146
PROJECT FILE NO.	606223		

CONSTRUCTION STAGING PLANS
STAGE 2

TRAFFIC MANAGEMENT LEGEND

- CONSTRUCTION ZONE
- WORK AREA
- DIRECTION OF TRAVEL
- REFLECTORIZED DRUM OR CONE
- A — REFLECTORIZED DRUM WITH TYPE 'A' FLASHING WARNING LIGHT (FIRST 10 DRUMS)
- P / — POLICE OFFICER OR FLAGGER CONTROL
- PORTABLE TYPE III BARRICADE (4' WIDE, MIN.)
- FLASHING ARROW BOARD (30"x 60" STD. SIZE WITH 13 LAMPS, MIN.)
- TEMPORARY BARRIER
- TEMPORARY IMPACT ATTENUATOR
- PAVEMENT MARKINGS TO COVER OR REMOVE
- PORTABLE CHANGEABLE MESSAGE SIGN
- MOVABLE IMPACT ATTENUATOR

SUGGESTED STAGE 2 SEQUENCE OF CONSTRUCTION

1. INSTALL TEMPORARY SIGNS, DRUMS AND OTHER TRAFFIC CONTROL DEVICES AS REQUIRED BY THE ENGINEER.
2. REMOVE EXISTING PAVEMENT MARKINGS THAT ARE IN CONFLICT WITH TEMPORARY SETUP.
3. INSTALL TEMPORARY PAVEMENT MARKINGS.
4. SHIFT TRAFFIC INTO NEW LANE CONFIGURATIONS UTILIZING THE NEWLY CONSTRUCTED HMA PAVEMENT IN THE MEDIAN FOR THE EASTBOUND CROSSOVERS.
5. INSTALL THE WILDLIFE CORRIDOR SECTIONS LOCATED IN THE EASTBOUND ROADWAY.

NOTES

1. REFER TO MEDIAN CROSSOVER DETAILS FOR CONSTRUCTION NOTATION.
2. THE CONTRACTOR SHALL USE STANDARD METHODS TO REMOVE EXISTING CONFLICTING PAVEMENT MARKINGS.
3. CONTRACTOR SHALL MAINTAIN ACCESS TO ALL BUSINESSES AND RESIDENCES AT ALL TIMES.

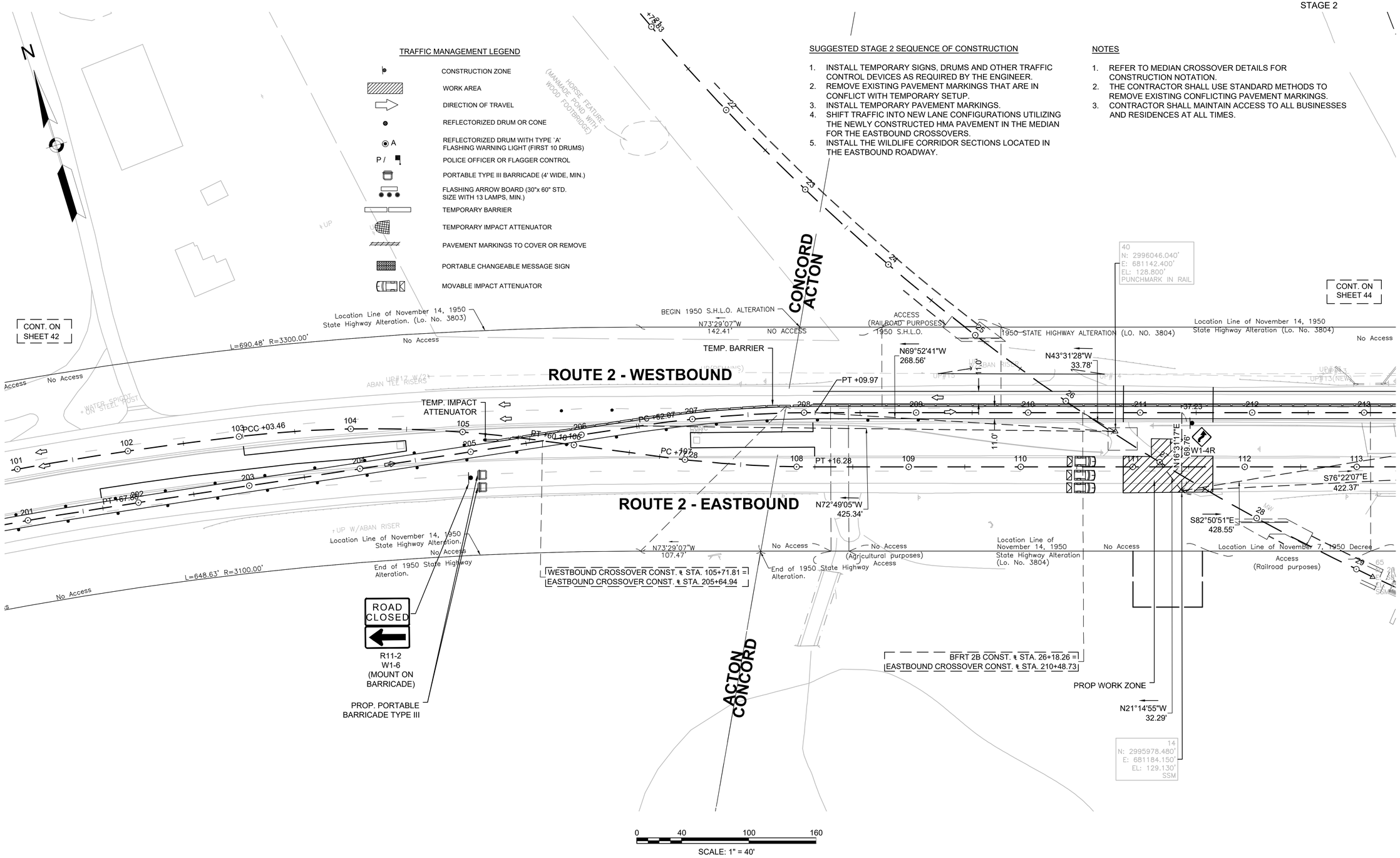

606223_HD_(STAGING).DWG Plotted on 26-Jun-2018 12:05 PM

ACTON & CONCORD
BRUCE FREEMAN RAIL TRAIL PHASE 2B

STATE	FED. AID PROJ. NO.	SHEET NO.	TOTAL SHEETS
MA	-	44	146
PROJECT FILE NO.	606223		

CONSTRUCTION STAGING PLANS STAGE 2

TRAFFIC MANAGEMENT LEGEND

- CONSTRUCTION ZONE
- WORK AREA
- DIRECTION OF TRAVEL
- REFLECTORIZED DRUM OR CONE
- A — REFLECTORIZED DRUM WITH TYPE 'A' FLASHING WARNING LIGHT (FIRST 10 DRUMS)
- P / — POLICE OFFICER OR FLAGGER CONTROL
- PORTABLE TYPE III BARRICADE (4' WIDE, MIN.)
- FLASHING ARROW BOARD (30"x 60" STD. SIZE WITH 13 LAMPS, MIN.)
- TEMPORARY BARRIER
- TEMPORARY IMPACT ATTENUATOR
- PAVEMENT MARKINGS TO COVER OR REMOVE
- PORTABLE CHANGEABLE MESSAGE SIGN
- MOVABLE IMPACT ATTENUATOR

SUGGESTED STAGE 2 SEQUENCE OF CONSTRUCTION

1. INSTALL TEMPORARY SIGNS, DRUMS AND OTHER TRAFFIC CONTROL DEVICES AS REQUIRED BY THE ENGINEER.
2. REMOVE EXISTING PAVEMENT MARKINGS THAT ARE IN CONFLICT WITH TEMPORARY SETUP.
3. INSTALL TEMPORARY PAVEMENT MARKINGS.
4. SHIFT TRAFFIC INTO NEW LANE CONFIGURATIONS UTILIZING THE NEWLY CONSTRUCTED HMA PAVEMENT IN THE MEDIAN FOR THE EASTBOUND CROSSOVERS.
5. INSTALL THE WILDLIFE CORRIDOR SECTIONS LOCATED IN THE EASTBOUND ROADWAY.

NOTES

1. REFER TO MEDIAN CROSSOVER DETAILS FOR CONSTRUCTION NOTATION.
2. THE CONTRACTOR SHALL USE STANDARD METHODS TO REMOVE EXISTING CONFLICTING PAVEMENT MARKINGS.
3. CONTRACTOR SHALL MAINTAIN ACCESS TO ALL BUSINESSES AND RESIDENCES AT ALL TIMES.

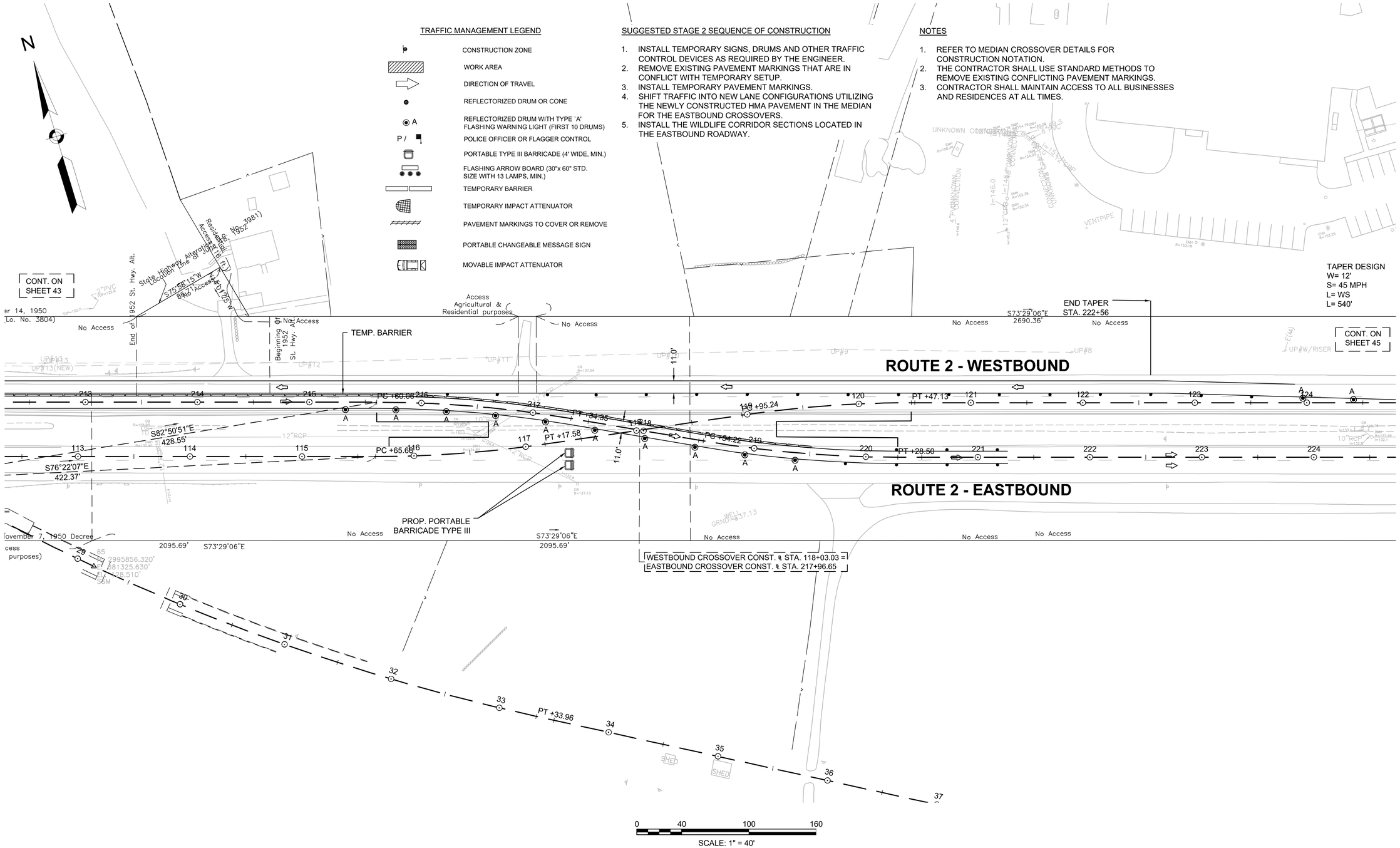

606223_HD_(STAGING).DWG Plotted on 26-Jun-2018 12:05 PM

ACTON & CONCORD
BRUCE FREEMAN RAIL TRAIL PHASE 2B

STATE	FED. AID PROJ. NO.	SHEET NO.	TOTAL SHEETS
MA	-	45	146
PROJECT FILE NO.	606223		

CONSTRUCTION STAGING PLANS
STAGE 2

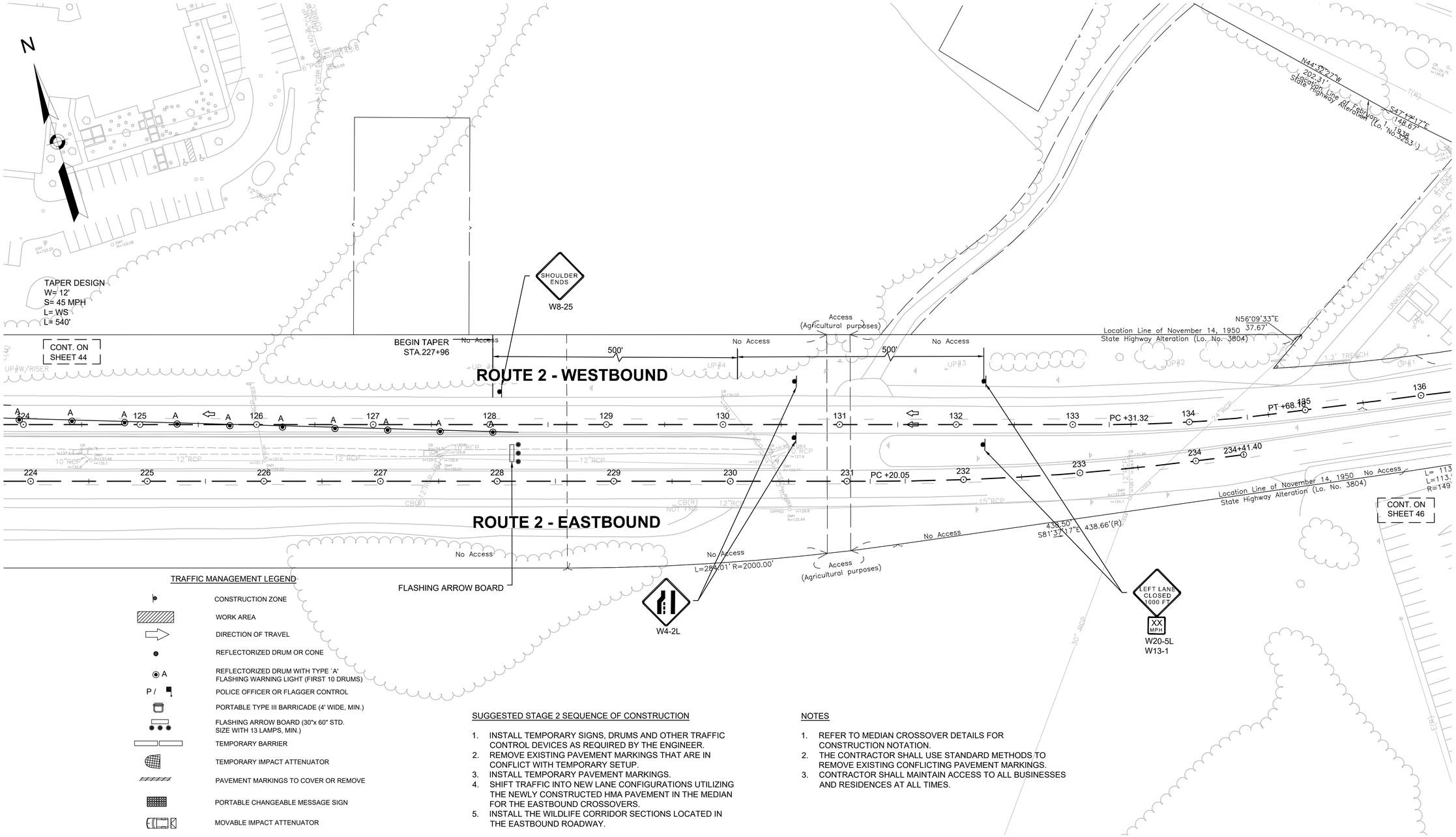

TRAFFIC MANAGEMENT LEGEND

- CONSTRUCTION ZONE
- WORK AREA
- DIRECTION OF TRAVEL
- REFLECTORIZED DRUM OR CONE
- A — REFLECTORIZED DRUM WITH TYPE 'A' FLASHING WARNING LIGHT (FIRST 10 DRUMS)
- P / — POLICE OFFICER OR FLAGGER CONTROL
- PORTABLE TYPE III BARRICADE (4' WIDE, MIN.)
- FLASHING ARROW BOARD (30"x 60" STD. SIZE WITH 13 LAMPS, MIN.)
- TEMPORARY BARRIER
- TEMPORARY IMPACT ATTENUATOR
- PAVEMENT MARKINGS TO COVER OR REMOVE
- PORTABLE CHANGEABLE MESSAGE SIGN
- MOVABLE IMPACT ATTENUATOR

SUGGESTED STAGE 2 SEQUENCE OF CONSTRUCTION

1. INSTALL TEMPORARY SIGNS, DRUMS AND OTHER TRAFFIC CONTROL DEVICES AS REQUIRED BY THE ENGINEER.
2. REMOVE EXISTING PAVEMENT MARKINGS THAT ARE IN CONFLICT WITH TEMPORARY SETUP.
3. INSTALL TEMPORARY PAVEMENT MARKINGS.
4. SHIFT TRAFFIC INTO NEW LANE CONFIGURATIONS UTILIZING THE NEWLY CONSTRUCTED HMA PAVEMENT IN THE MEDIAN FOR THE EASTBOUND CROSSOVERS.
5. INSTALL THE WILDLIFE CORRIDOR SECTIONS LOCATED IN THE EASTBOUND ROADWAY.

NOTES

1. REFER TO MEDIAN CROSSOVER DETAILS FOR CONSTRUCTION NOTATION.
2. THE CONTRACTOR SHALL USE STANDARD METHODS TO REMOVE EXISTING CONFLICTING PAVEMENT MARKINGS.
3. CONTRACTOR SHALL MAINTAIN ACCESS TO ALL BUSINESSES AND RESIDENCES AT ALL TIMES.

0 40 100 160
SCALE: 1" = 40'

606223_HD_(STAGING).DWG Plotted on 26-Jun-2018 12:05 PM

ACTON & CONCORD
BRUCE FREEMAN RAIL TRAIL PHASE 2B

STATE	FED. AID PROJ. NO.	SHEET NO.	TOTAL SHEETS
MA	-	46	146
PROJECT FILE NO.	606223		

CONSTRUCTION STAGING PLANS
STAGE 3

TRAFFIC MANAGEMENT LEGEND

- CONSTRUCTION ZONE
- WORK AREA
- DIRECTION OF TRAVEL
- REFLECTORIZED DRUM OR CONE
- A — REFLECTORIZED DRUM WITH TYPE `A' FLASHING WARNING LIGHT (FIRST 10 DRUMS)
- P / — POLICE OFFICER OR FLAGGER CONTROL
- PORTABLE TYPE III BARRICADE (4' WIDE, MIN.)
- FLASHING ARROW BOARD (30"x 60" STD. SIZE WITH 13 LAMPS, MIN.)
- TEMPORARY BARRIER
- TEMPORARY IMPACT ATTENUATOR
- PAVEMENT MARKINGS TO COVER OR REMOVE
- PORTABLE CHANGEABLE MESSAGE SIGN
- MOVABLE IMPACT ATTENUATOR

SUGGESTED STAGE 3 SEQUENCE OF CONSTRUCTION

1. INSTALL TEMPORARY SIGNS, DRUMS AND OTHER TRAFFIC CONTROL DEVICES AS REQUIRED BY THE ENGINEER.
2. REMOVE EXISTING PAVEMENT MARKINGS THAT ARE IN CONFLICT WITH TEMPORARY SETUP.
3. INSTALL TEMPORARY PAVEMENT MARKINGS.
4. SHIFT TRAFFIC INTO NEW LANE CONFIGURATIONS UTILIZING THE NEWLY CONSTRUCTED HMA PAVEMENT IN THE MEDIAN FOR THE WESTBOUND CROSSOVERS.
5. INSTALL THE WILDLIFE CORRIDOR SECTIONS LOCATED IN THE WESTBOUND ROADWAY.

NOTES

1. REFER TO MEDIAN CROSSOVER DETAILS FOR CONSTRUCTION NOTATION.
2. THE CONTRACTOR SHALL USE STANDARD METHODS TO REMOVE EXISTING CONFLICTING PAVEMENT MARKINGS.
3. CONTRACTOR SHALL MAINTAIN ACCESS TO ALL BUSINESSES AND RESIDENCES AT ALL TIMES.

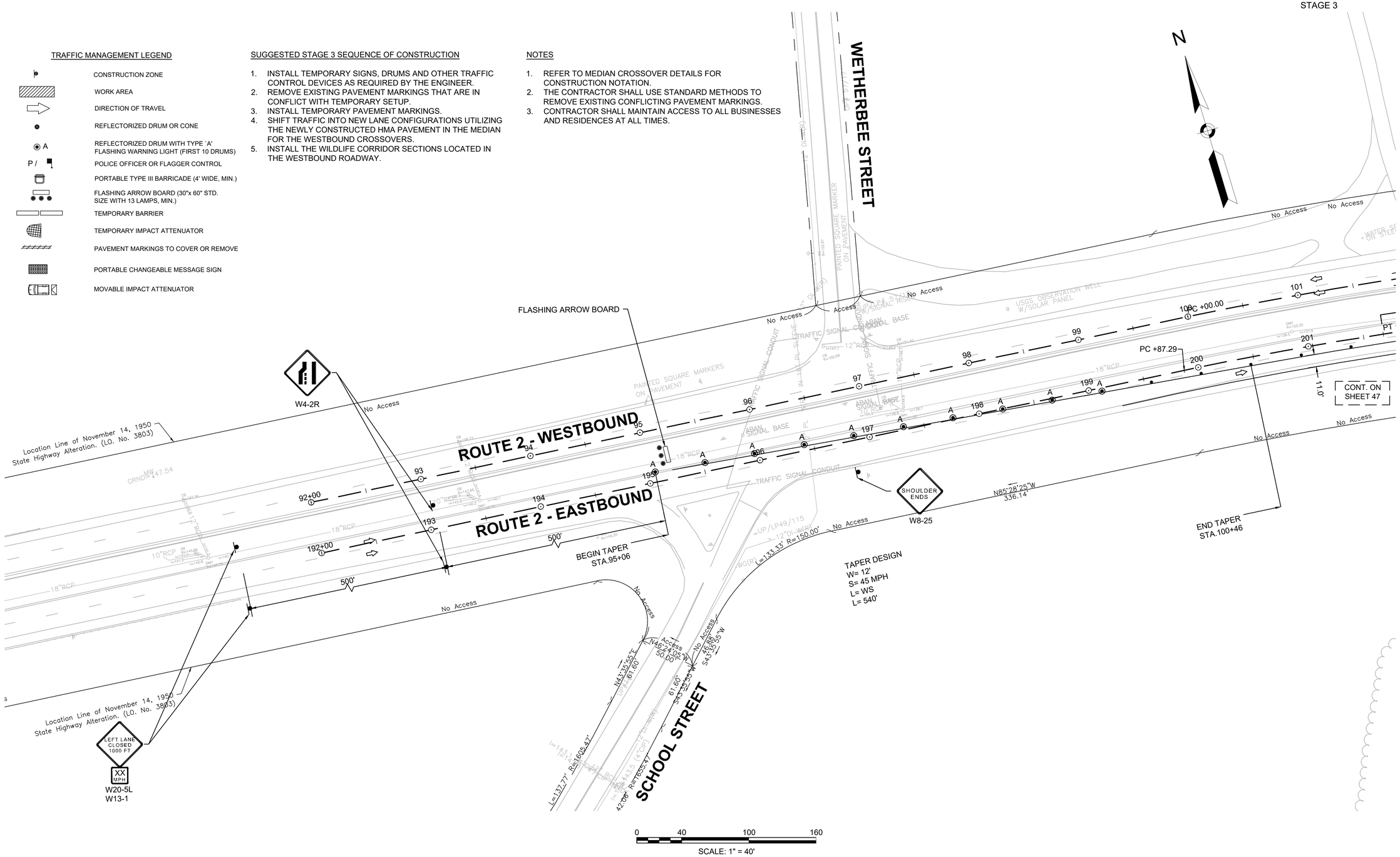

606223_HD_(STAGING).DWG Plotted on 26-Jun-2018 12:05 PM

ACTON & CONCORD
BRUCE FREEMAN RAIL TRAIL PHASE 2B

STATE	FED. AID PROJ. NO.	SHEET NO.	TOTAL SHEETS
MA	-	47	146
PROJECT FILE NO.	606223		

CONSTRUCTION STAGING PLANS
STAGE 3

TRAFFIC MANAGEMENT LEGEND

- CONSTRUCTION ZONE
- WORK AREA
- DIRECTION OF TRAVEL
- REFLECTORIZED DRUM OR CONE
- A — REFLECTORIZED DRUM WITH TYPE 'A' FLASHING WARNING LIGHT (FIRST 10 DRUMS)
- P / — POLICE OFFICER OR FLAGGER CONTROL
- PORTABLE TYPE III BARRICADE (4' WIDE, MIN.)
- FLASHING ARROW BOARD (30"x 60" STD. SIZE WITH 13 LAMPS, MIN.)
- TEMPORARY BARRIER
- TEMPORARY IMPACT ATTENUATOR
- PAVEMENT MARKINGS TO COVER OR REMOVE
- PORTABLE CHANGEABLE MESSAGE SIGN
- MOVABLE IMPACT ATTENUATOR

SUGGESTED STAGE 3 SEQUENCE OF CONSTRUCTION

1. INSTALL TEMPORARY SIGNS, DRUMS AND OTHER TRAFFIC CONTROL DEVICES AS REQUIRED BY THE ENGINEER.
2. REMOVE EXISTING PAVEMENT MARKINGS THAT ARE IN CONFLICT WITH TEMPORARY SETUP.
3. INSTALL TEMPORARY PAVEMENT MARKINGS.
4. SHIFT TRAFFIC INTO NEW LANE CONFIGURATIONS UTILIZING THE NEWLY CONSTRUCTED HMA PAVEMENT IN THE MEDIAN FOR THE WESTBOUND CROSSOVERS.
5. INSTALL THE WILDLIFE CORRIDOR SECTIONS LOCATED IN THE WESTBOUND ROADWAY.

NOTES

1. REFER TO MEDIAN CROSSOVER DETAILS FOR CONSTRUCTION NOTATION.
2. THE CONTRACTOR SHALL USE STANDARD METHODS TO REMOVE EXISTING CONFLICTING PAVEMENT MARKINGS.
3. CONTRACTOR SHALL MAINTAIN ACCESS TO ALL BUSINESSES AND RESIDENCES AT ALL TIMES.

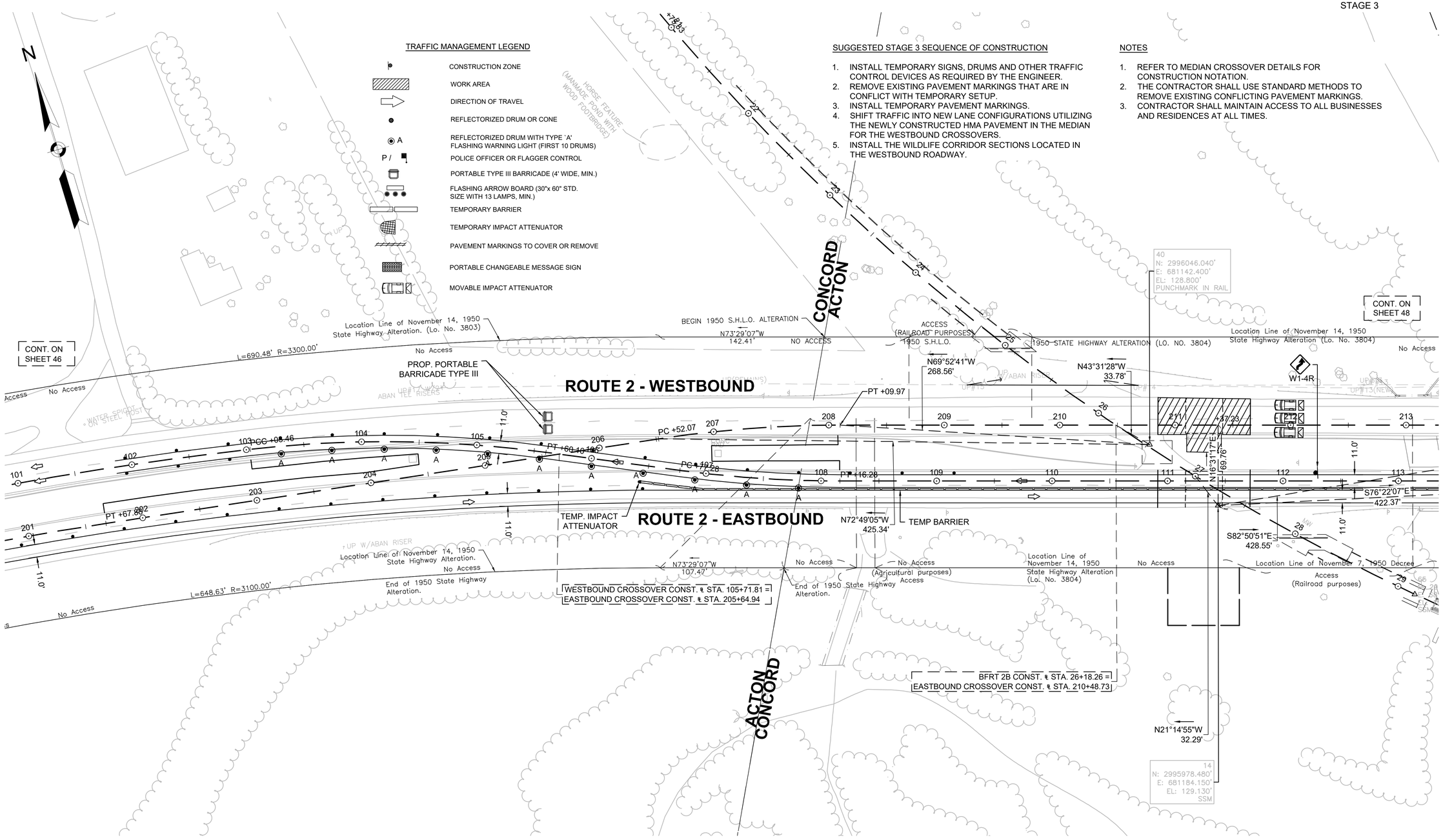

606223_HD_(STAGING).DWG Plotted on 26-Jun-2018 12:05 PM

ACTON & CONCORD
BRUCE FREEMAN RAIL TRAIL PHASE 2B

STATE	FED. AID PROJ. NO.	SHEET NO.	TOTAL SHEETS
MA	-	48	146
PROJECT FILE NO.	606223		

CONSTRUCTION STAGING PLANS
STAGE 3

TRAFFIC MANAGEMENT LEGEND

- CONSTRUCTION ZONE
- WORK AREA
- DIRECTION OF TRAVEL
- REFLECTORIZED DRUM OR CONE
- A — REFLECTORIZED DRUM WITH TYPE 'A' FLASHING WARNING LIGHT (FIRST 10 DRUMS)
- P / — POLICE OFFICER OR FLAGGER CONTROL
- PORTABLE TYPE III BARRICADE (4' WIDE, MIN.)
- FLASHING ARROW BOARD (30"x 60" STD. SIZE WITH 13 LAMPS, MIN.)
- TEMPORARY BARRIER
- TEMPORARY IMPACT ATTENUATOR
- PAVEMENT MARKINGS TO COVER OR REMOVE
- PORTABLE CHANGEABLE MESSAGE SIGN
- MOVABLE IMPACT ATTENUATOR

SUGGESTED STAGE 3 SEQUENCE OF CONSTRUCTION

1. INSTALL TEMPORARY SIGNS, DRUMS AND OTHER TRAFFIC CONTROL DEVICES AS REQUIRED BY THE ENGINEER.
2. REMOVE EXISTING PAVEMENT MARKINGS THAT ARE IN CONFLICT WITH TEMPORARY SETUP.
3. INSTALL TEMPORARY PAVEMENT MARKINGS.
4. SHIFT TRAFFIC INTO NEW LANE CONFIGURATIONS UTILIZING THE NEWLY CONSTRUCTED HMA PAVEMENT IN THE MEDIAN FOR THE WESTBOUND CROSSOVERS.
5. INSTALL THE WILDLIFE CORRIDOR SECTIONS LOCATED IN THE WESTBOUND ROADWAY.

NOTES

1. REFER TO MEDIAN CROSSOVER DETAILS FOR CONSTRUCTION NOTATION.
2. THE CONTRACTOR SHALL USE STANDARD METHODS TO REMOVE EXISTING CONFLICTING PAVEMENT MARKINGS.
3. CONTRACTOR SHALL MAINTAIN ACCESS TO ALL BUSINESSES AND RESIDENCES AT ALL TIMES.

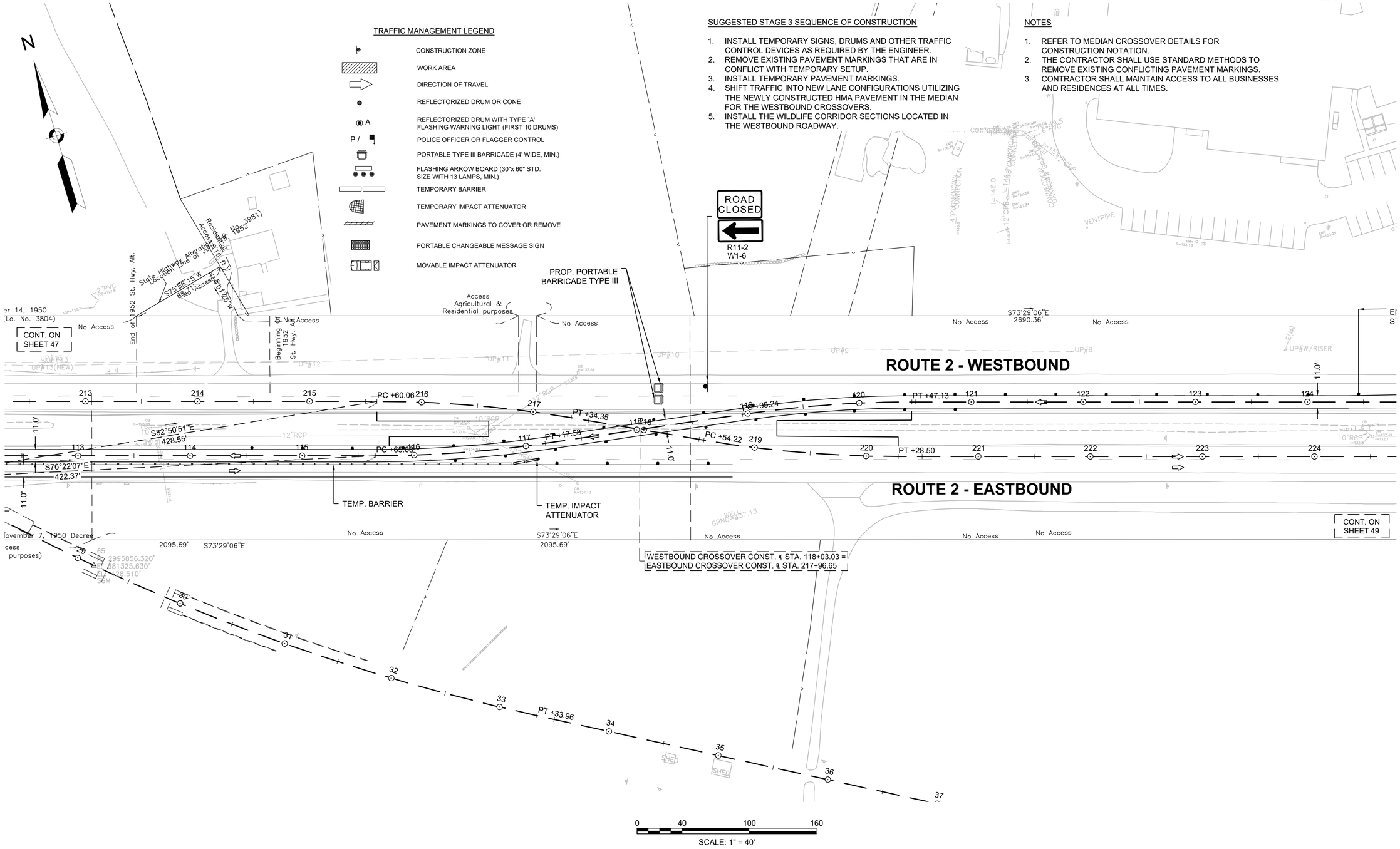

606223_HD_(STAGING).DWG Plotted on 26-Jun-2018 12:06 PM

ACTON & CONCORD
BRUCE FREEMAN RAIL TRAIL PHASE 2B

STATE	FED. AID PROJ. NO.	SHEET NO.	TOTAL SHEETS
MA	-	49	146
PROJECT FILE NO.	606223		

CONSTRUCTION STAGING PLANS
STAGE 3

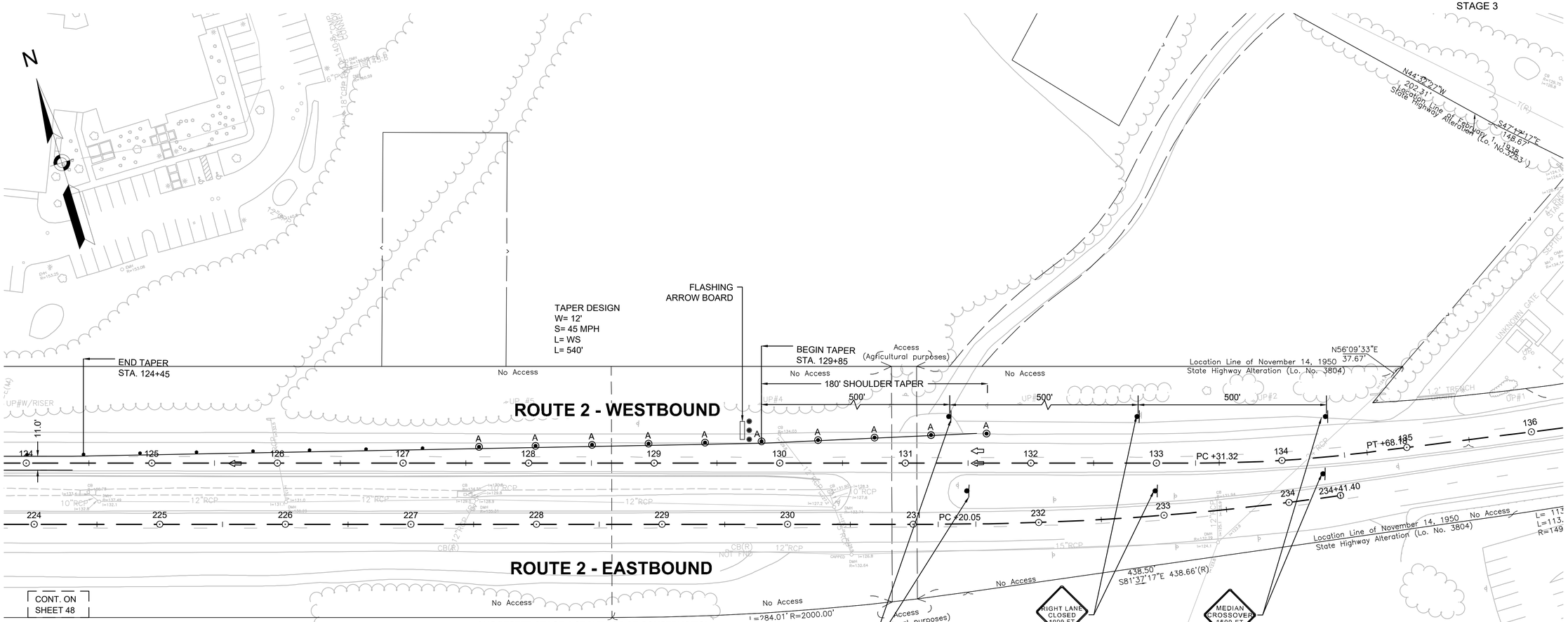

TRAFFIC MANAGEMENT LEGEND

- CONSTRUCTION ZONE
- WORK AREA
- DIRECTION OF TRAVEL
- REFLECTORIZED DRUM OR CONE
- A — REFLECTORIZED DRUM WITH TYPE 'A' FLASHING WARNING LIGHT (FIRST 10 DRUMS)
- P / — POLICE OFFICER OR FLAGGER CONTROL
- PORTABLE TYPE III BARRICADE (4' WIDE, MIN.)
- FLASHING ARROW BOARD (30"x 60" STD. SIZE WITH 13 LAMPS, MIN.)
- TEMPORARY BARRIER
- TEMPORARY IMPACT ATTENUATOR
- PAVEMENT MARKINGS TO COVER OR REMOVE
- PORTABLE CHANGEABLE MESSAGE SIGN
- MOVABLE IMPACT ATTENUATOR

SUGGESTED STAGE 3 SEQUENCE OF CONSTRUCTION

1. INSTALL TEMPORARY SIGNS, DRUMS AND OTHER TRAFFIC CONTROL DEVICES AS REQUIRED BY THE ENGINEER.
2. REMOVE EXISTING PAVEMENT MARKINGS THAT ARE IN CONFLICT WITH TEMPORARY SETUP.
3. INSTALL TEMPORARY PAVEMENT MARKINGS.
4. SHIFT TRAFFIC INTO NEW LANE CONFIGURATIONS UTILIZING THE NEWLY CONSTRUCTED HMA PAVEMENT IN THE MEDIAN FOR THE WESTBOUND CROSSOVERS.
5. INSTALL THE WILDLIFE CORRIDOR SECTIONS LOCATED IN THE WESTBOUND ROADWAY.

NOTES

1. REFER TO MEDIAN CROSSOVER DETAILS FOR CONSTRUCTION NOTATION.
2. THE CONTRACTOR SHALL USE STANDARD METHODS TO REMOVE EXISTING CONFLICTING PAVEMENT MARKINGS.
3. CONTRACTOR SHALL MAINTAIN ACCESS TO ALL BUSINESSES AND RESIDENCES AT ALL TIMES.

0 40 100 160
SCALE: 1" = 40'

606223_HD_(STAGING).DWG Plotted on 26-Jun-2018 12:06 PM

TRAFFIC MANAGEMENT NOTES

GENERAL

1. ALL TRAFFIC MANAGEMENT AND WORK ZONE TRAFFIC CONTROL MEASURES SHALL CONFORM TO THE CURRENT MANUAL ON UNIFORM TRAFFIC CONTROL DEVICES (M.U.T.C.D.), MASSDOT - HIGHWAY DIVISION'S "STANDARD DETAILS AND DRAWINGS FOR THE DEVELOPMENT OF TRAFFIC MANAGEMENT PLANS", THE STANDARD SPECIFICATIONS, AND THE FOLLOWING NOTES.

2. THE TEMPORARY TRAFFIC CONTROL PLANS CONTAINED HEREIN ARE GIVEN AS A GUIDE FOR TYPICAL WORK ZONE TRAFFIC CONTROL APPLICATIONS FOR THE TYPES OF WORK ANTICIPATED FOR THIS PROJECT. THEY ARE NOT INTENDED TO COVER ALL POSSIBLE CONSTRUCTION OPERATIONS WHICH THE CONTRACTOR MAY CHOOSE TO EMPLOY. WORK ZONE TRAFFIC CONTROL FOR OTHER CONSTRUCTION OPERATIONS OR OTHER TRAFFIC SITUATIONS IF APPLICABLE SHALL BE IN ACCORDANCE WITH THE REFERENCES LISTED IN NOTE NO. 1 AND AS APPROVED OR DIRECTED BY THE ENGINEER.

3. WITH THE EXCEPTION OF THE PERMANENT LANE CLOSURES REQUIRED FOR STAGED CONSTRUCTION, LANE RESTRICTIONS MAY NOT REMAIN OVERNIGHT OR DURING NON-WORKING HOURS. AFTER EACH WORKING DAY, TRAFFIC CONTROL DEVICES THAT ARE NOT REQUIRED SHALL BE MOVED OFF THE ROADWAY OR FULL DEPTH CONSTRUCTION AREA AND PLACED SO AS NOT TO IMPEDE PEDESTRIAN AREAS, ABUTTER ACCESS OR CAUSE CONFUSION TO MOTORISTS. IN CERTAIN CIRCUMSTANCES, AND ONLY WITH THE APPROVAL OF MASSDOT AND THE ENGINEER, LANE RESTRICTIONS MAY REMAIN OVERNIGHT.

4. CONTRACTOR SHALL PROVIDE A SAFE TEMPORARY PEDESTRIAN ACCESS WHERE EXISTING SIDEWALKS OR OTHER PEDESTRIAN AREAS ARE AFFECTED BY CONSTRUCTION WORK. CONTRACTOR SHALL NOTIFY EACH ABUTTER AT LEAST 24 HOURS IN ADVANCE OF THE START OF ANY WORK THAT WILL REQUIRE THE TEMPORARY CLOSURE OF ACCESS, SUCH AS CONDUIT INSTALLATION, EXISTING PAVEMENT EXCAVATION, TEMPORARY DRIVEWAY PAVEMENT PLACEMENT AND SIMILAR OPERATIONS.

5. PLACE ALL CONSTRUCTION SIGNING, TRAFFIC CONTROL DEVICES AND TEMPORARY PAVEMENT MARKINGS FOR EACH PHASE PRIOR TO COMMENCEMENT OF CONSTRUCTION.

6. ONE (1) THRU TRAVEL LANE HAVING A MINIMUM WIDTH OF 11'-0" MUST BE PROVIDED FOR BOTH DIRECTIONS DURING ALL PHASES OF CONSTRUCTION AS SHOWN ON THE TEMPORARY TRAFFIC CONTROL PLANS, UNLESS OTHERWISE DIRECTED BY THE ENGINEER. MINIMUM LANE WIDTH IS MEASURED FROM THE EDGE OF DRUMS OR MEDIAN BARRIER.

7. WHEN WORK INFRINGES UPON THE TRAVELED WAY, WORK SHALL BE RESTRICTED TO OFF-PEAK HOURS ONLY (NORMALLY 9:00am TO 4:00pm, MONDAY TO FRIDAY). THE CONTRACTOR SHALL NOTIFY EACH ABUTTER AT LEAST 24 HOURS IN ADVANCE OF ROAD CLOSURE.

8. TAPER LENGTH FORMULAE FOR CHANNELIZATION DEVICES: ENGLISH UNITS:
   $L = WxS$ FOR SPEED EQUAL TO OR GREATER THAN 45 M.P.H.
   $L = WS^2/60$ FOR SPEED EQUAL TO OR LESS THAN 40 M.P.H.
   WHERE: L = MIN. LENGTH OF TAPER, S = POSTED SPEED, W = OFFSET WIDTH.

9. ADVISORY SPEED LIMIT, IF USED, SHALL BE SET IN THE FIELD BY THE ENGINEER. W13-1 PLATES SHALL BE USED WHERE APPROPRIATE.

10. FLASHING ARROW PANEL SHALL BE SET IN "ARROW MODE" WHEN USED FOR ACTUAL LANE CLOSURES ONLY. FOR SHOULDER CLOSURES, BULBS TO BE ILLUMINATED IN A NON-DIRECTIONAL CAUTION CONFIGURATION TO AVOID UNNECESSARY LANE SHIFTS.

11. DISTANCES SHOWN ON THE TEMPORARY TRAFFIC CONTROL PLANS ARE A GUIDE ONLY, AND MAY BE ADJUSTED IN THE FIELD BY THE ENGINEER.

GRADE DIFFERENCES

12. WHERE THERE IS A LONGITUDINAL DIFFERENCE IN ELEVATION BETWEEN EXISTING PAVEMENT AND ADJACENT TRAVEL SURFACE (UNDER REPAIR OR RECONSTRUCTION), THE CONTRACTOR SHALL PATCH A TEMPORARY HMA WEDGE WITH A 12:1 (OR FLATTER) SLOPE FOR SMOOTH TRANSITION. SEE DETAIL, THIS SHEET.

13. CROSS-SECTIONAL GRADE DIFFERENCES IN EXCESS OF 2" DURING NON-WORKING HOURS WILL REQUIRE DELINEATION BY USE OF REFLECTORIZED DRUMS.

14. CROSS-SECTIONAL GRADE DIFFERENCES IN EXCESS OF 4" DURING NON-WORKING HOURS SHALL BE PROTECTED BY BACKFILLING WITH A WEDGE OF EARTHWORK TO BE COMPACTED AT 4:1 SLOPE AND WILL ALSO REQUIRE DELINEATION BY USE OF DRUMS.

15. A MINIMUM SLOPE OF 4:1 MUST BE MAINTAINED AFTER WORKING HOURS DURING SUBBASE AND BASE COURSE INSTALLATION ALONG EDGE OF THE TRAVELWAY (SEE DETAIL, THIS SHEET). A MAXIMUM SLOPE OF 8:1 MUST BE MAINTAINED ON ALL ABUTTER ACCESS DRIVES AND A MAXIMUM SLOPE OF 12:1 MUST BE MAINTAINED ON ALL SIDEWALKS.

CONSTRUCTION SIGNING

16. ALL CONSTRUCTION SIGNS SHALL BE BLACK LEGEND ON A REFLECTORIZED ORANGE BACKGROUND UNLESS OTHERWISE NOTED.

17. CONSTRUCTION SIGNING SHOWN ON THE ADVANCE SIGNING PLAN SHALL REMAIN IN PLACE FOR THE ENTIRE PROJECT DURATION, UNLESS OTHERWISE DIRECTED BY THE ENGINEER.

18. STANDARD ORANGE OR FLUORESCENT RED-ORANGE FLAGS (16"x16" MIN.) MAY BE ATTACHED TWO (2) EACH ON ALL ADVANCE WARNING SIGNS. FLAGS SHALL NOT INTERFERE WITH A CLEAR VIEW OF THE SIGN FACE. IF USED, THE COST FOR THE FLAGS SHALL BE CONSIDERED INCIDENTAL TO THE COST OF THE SIGNS WITH NO ADDITIONAL PAYMENT.

19. EXISTING GUIDE SIGNS SHALL BE TEMPORARILY RESET AS DIRECTED BY THE ENGINEER.

20. ALL SIGNS, INCLUDING EXISTING, THAT ARE NOT REPRESENTATIVE OF ACTUAL WORK CONDITIONS SHALL BE EITHER COVERED OR REMOVED WHEN NOT APPLICABLE.

21. IF USED, ALL W20-4 AND W20-5 SIGNS SHALL BE TAKEN DOWN OR COVERED AT THE CLOSE OF EACH DAY UNLESS LANE RESTRICTIONS ARE PERMITTED TO REMAIN OVERNIGHT IN ACCORDANCE WITH NOTE NO. 3 ABOVE.

22. USE W20-7b OR W20-7a SIGNS ONLY WHILE POLICE OR FLAGGERS ARE DIRECTING TRAFFIC. THEY SHALL BE TAKEN DOWN OR COVERED AT THE CLOSE OF EACH DAY OR WHEN NOT IN USE.

PAVEMENT MARKINGS

23. PAVEMENT MARKINGS WHICH ARE NO LONGER APPLICABLE SHALL BE REMOVED. APPLY TEMPORARY MARKINGS WHERE SHOWN ON THE TEMPORARY TRAFFIC CONTROL PLANS.

24. ON PROJECTS WHERE PAVEMENT OVERLAY IS NOT DESIGNATED, EXISTING PAVEMENT MARKINGS WHICH ARE IN CONFLICT WITH TEMPORARY TRAFFIC CONTROLS SHOULD BE COVERED TEMPORARILY WITH BLACKOUT TAPE, AS DIRECTED BY THE ENGINEER, FOR THE FULL DURATION OF THE PHASE IN PROGRESS. TEMPORARY PAINTED OR REMOVABLE TAPE MARKINGS SHALL BE USED AS NECESSARY FOR ALL PHASES OF CONSTRUCTION.

CHANNNELIZATION

25. THE MAXIMUM SPACING BETWEEN CHANNELIZATION DEVICES (DRUMS OR CONES) SHALL BE APPROXIMATELY EQUAL IN FEET TO THE POSTED SPEED LIMIT. THE MINIMUM SPACING SHALL BE 25' O.C.

26. REFLECTORIZED CONES SHALL BE 36" HIGH.

27. PLASTIC DRUMS MUST PASS THE CRITERIA SET FORTH IN NCHRP 350 "RECOMMENDED PROCEDURES FOR THE SAFETY PERFORMANCE EVALUATION OF HIGHWAY FEATURES." IF THEY DO NOT MEET THESE CRITERIA, THEY MUST BE REMOVED FROM THE PROJECT.

28. TEMPORARY IMPACT ATTENUATORS MUST MEET THE PERFORMANCE STANDARDS OF NCHRP 350.

29. SIGNS AND SIGN SUPPORTS LOCATED ON OR NEAR THE TRAVELED WAY MUST PASS THE CRITERIA SET FORTH IN NCHRP 350 "RECOMMENDED PROCEDURES FOR THE SAFETY PERFORMANCE EVALUATION OF HIGHWAY FEATURES." IF THEY DO NOT MEET THIS CRITERIA, THEY MUST BE REMOVED FROM THE PROJECT.

IDENTIFI-CATION NUMBER	SIZE OF SIGN		TEXT	TEXT DIMENSIONS (INCHES)		NUMBER OF SIGNS REQUIRED	COLOR			UNIT AREA IN SQUARE FEET	AREA IN SQUARE FEET
	WIDTH	HEIGHT		LETTER HEIGHT	VERTICAL SPACING		BACK-GROUND	LEGEND	BORDER		
MA-R2-10a	48"	36"	WORK ZONE / SPEEDING FINES DOUBLED	MASSDOT STANDARD		4	ORANGE / WHITE	BLACK	BLACK	12.00	48.00
MA-R2-10e	36"	48"	END ROAD WORK / DOUBLE FINES END	MASSDOT STANDARD		4	ORANGE / WHITE	BLACK	BLACK	12.00	48.00
R11-2	48"	30"	ROAD CLOSED	MUTCD STANDARD		1	WHITE	BLACK	BLACK	10.00	10.00
W1-4BL	48"	48"		MUTCD STANDARD		4	ORANGE	BLACK	BLACK	16.00	64.00
W1-4R	48"	48"		MUTCD STANDARD		4	ORANGE	BLACK	BLACK	16.00	64.00
W1-4BR	48"	48"		MUTCD STANDARD		4	ORANGE	BLACK	BLACK	16.00	64.00
W1-6	60"	30"		MUTCD STANDARD		1	ORANGE	BLACK	BLACK	12.50	12.50
W4-2L	48"	48"		MUTCD STANDARD		2	ORANGE	BLACK	BLACK	16.00	32.00
W4-2R	36"	36"		MUTCD STANDARD		2	ORANGE	BLACK	BLACK	9.00	18.00
W8-1	36"	36"	BUMP	MUTCD STANDARD		4	ORANGE	BLACK	BLACK	9.00	36.00
W8-3	36"	36"	PAVEMENT ENDS	MUTCD STANDARD		2	ORANGE	BLACK	BLACK	9.00	18.00
W8-8	36"	36"	ROUGH ROAD	MUTCD STANDARD		2	ORANGE	BLACK	BLACK	9.00	18.00
W8-15	36"	36"	GROOVED PAVEMENT	MUTCD STANDARD		4	ORANGE	BLACK	BLACK	9.00	36.00
W8-25	48"	48"	SHOULDER ENDS	MUTCD STANDARD		2	ORANGE	BLACK	BLACK	16.00	32.00
W13-1p	18"	18"	XX MPH	MUTCD STANDARD		4	ORANGE	BLACK	BLACK	2.25	9.00
W20-1	36"	36"	ROAD WORK AHEAD	MUTCD STANDARD		5	ORANGE	BLACK	BLACK	9.00	45.00
W20-5L	48"	48"	LEFT LANE CLOSED 1000 FT	MUTCD STANDARD		2	ORANGE	BLACK	BLACK	16.00	32.00
W20-5R	36"	36"	RIGHT LANE CLOSED XXX	MUTCD STANDARD		2	ORANGE	BLACK	BLACK	9.00	18.00
W21-5a	36"	36"	RIGHT SHOULDER CLOSED	MUTCD STANDARD		1	ORANGE	BLACK	BLACK	9.00	9.00
W21-5b	36"	36"	RIGHT SHOULDER CLOSED XXX	MUTCD STANDARD		1	ORANGE	BLACK	BLACK	9.00	9.00
W21-10	48"	48"	MEDIAN CROSSOVER 1500 FT	5" D	4"	2	ORANGE	BLACK	BLACK	16.00	32.00
W21-11	48"	48"	LANES SHIFT 1000 FT	5" D	4"	4	ORANGE	BLACK	BLACK	16.00	64.00

ACTON & CONCORD
BRUCE FREEMAN RAIL TRAIL PHASE 2B

STATE	FED. AID PROJ. NO.	SHEET NO.	TOTAL SHEETS
MA	-	50	146
PROJECT FILE NO.	606223		

TEMPORARY TRAFFIC CONTROL PLANS

606223_HD_(TTCP).DWG Plotted on 26-Jun-2018 12:06 PM

ACTON & CONCORD
BRUCE FREEMAN RAIL TRAIL PHASE 2B

STATE	FED. AID PROJ. NO.	SHEET NO.	TOTAL SHEETS
MA	-	51	146
PROJECT FILE NO.	606223		

TEMPORARY TRAFFIC CONTROL PLANS

TRAFFIC MANAGEMENT LEGEND

- CONSTRUCTION ZONE
- WORK AREA
- DIRECTION OF TRAVEL
- REFLECTORIZED DRUM OR CONE
- A — REFLECTORIZED DRUM WITH TYPE 'A' FLASHING WARNING LIGHT (FIRST 10 DRUMS)
- P / — POLICE OFFICER OR FLAGGER CONTROL
- PORTABLE TYPE III BARRICADE (4' WIDE, MIN.)
- FLASHING ARROW BOARD (30"x 60" STD. SIZE WITH 13 LAMPS, MIN.)
- TEMPORARY PRECAST CONCRETE BARRIER WITH TEMPORARY FENCE & WHITE REFLECTORS
- TEMPORARY IMPACT ATTENUATOR
- PAVEMENT MARKINGS TO COVER OR REMOVE (SEE NOTES 23 & 24)
- PORTABLE CHANGEABLE MESSAGE SIGN
- MOVABLE IMPACT ATTENUATOR

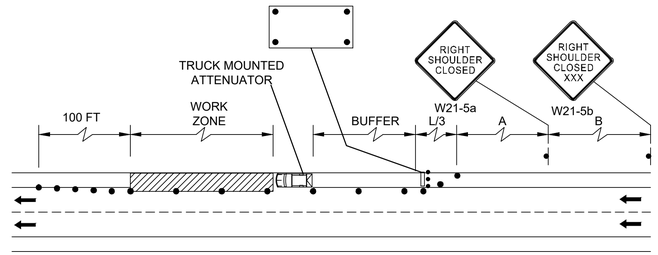

DIVIDED HIGHWAY
SHOULDER CLOSED
NOT TO SCALE

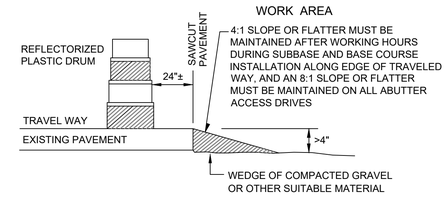

AFTER WORK HOURS TREATMENT
FOR LATERAL SLOPING

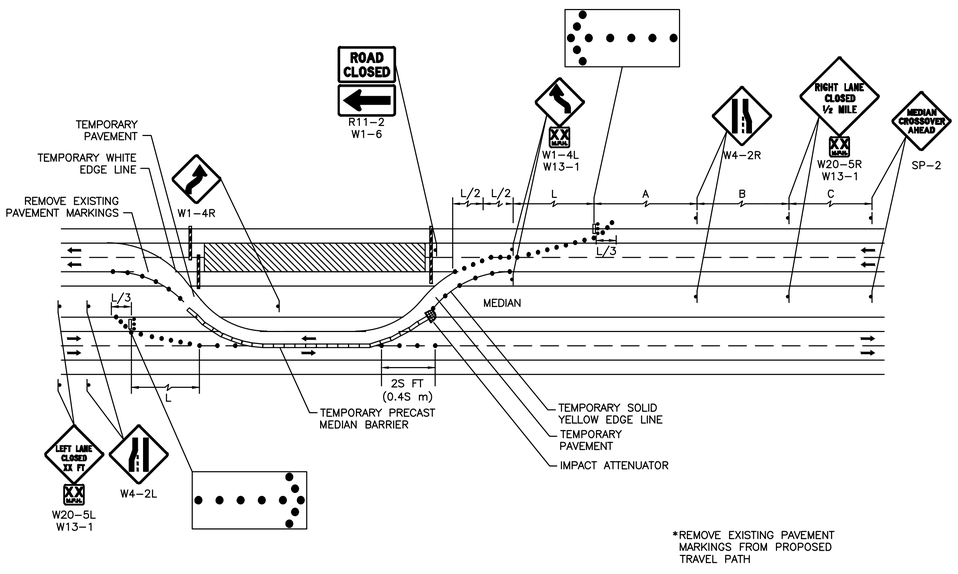

*REMOVE EXISTING PAVEMENT MARKINGS FROM PROPOSED TRAVEL PATH

DIVIDED HIGHWAY
MEDIAN CROSS-OVER

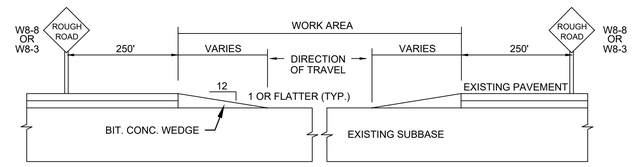

TEMPORARY RAMP

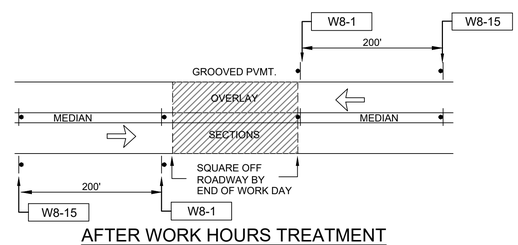

AFTER WORK HOURS TREATMENT
FOR AREAS RECEIVING OVERLAY

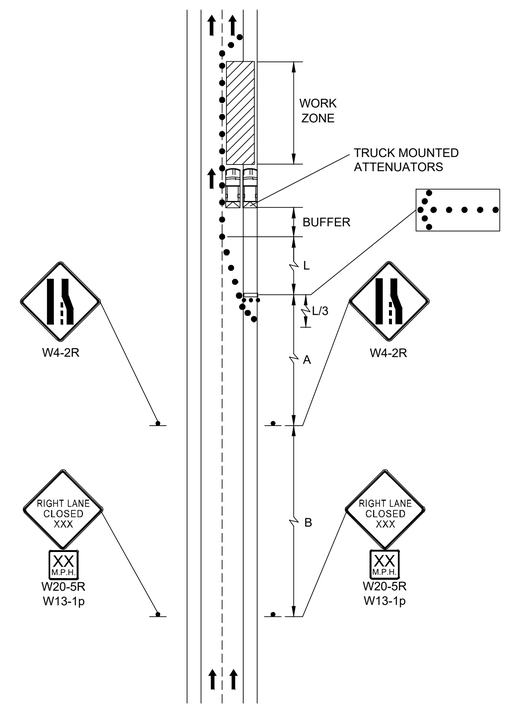

DIVIDED HIGHWAY
LANE CLOSURE/(SHORT TERM)
NOT TO SCALE

606223_HD_(TTCP).DWG Plotted on 26-Jun-2018 12:06 PM

ACTON & CONCORD
BRUCE FREEMAN RAIL TRAIL PHASE 2B

STATE	FED. AID PROJ. NO.	SHEET NO.	TOTAL SHEETS
MA	-	52	146
PROJECT FILE NO.	606223		

TEMPORARY TRAFFIC CONTROL PLANS

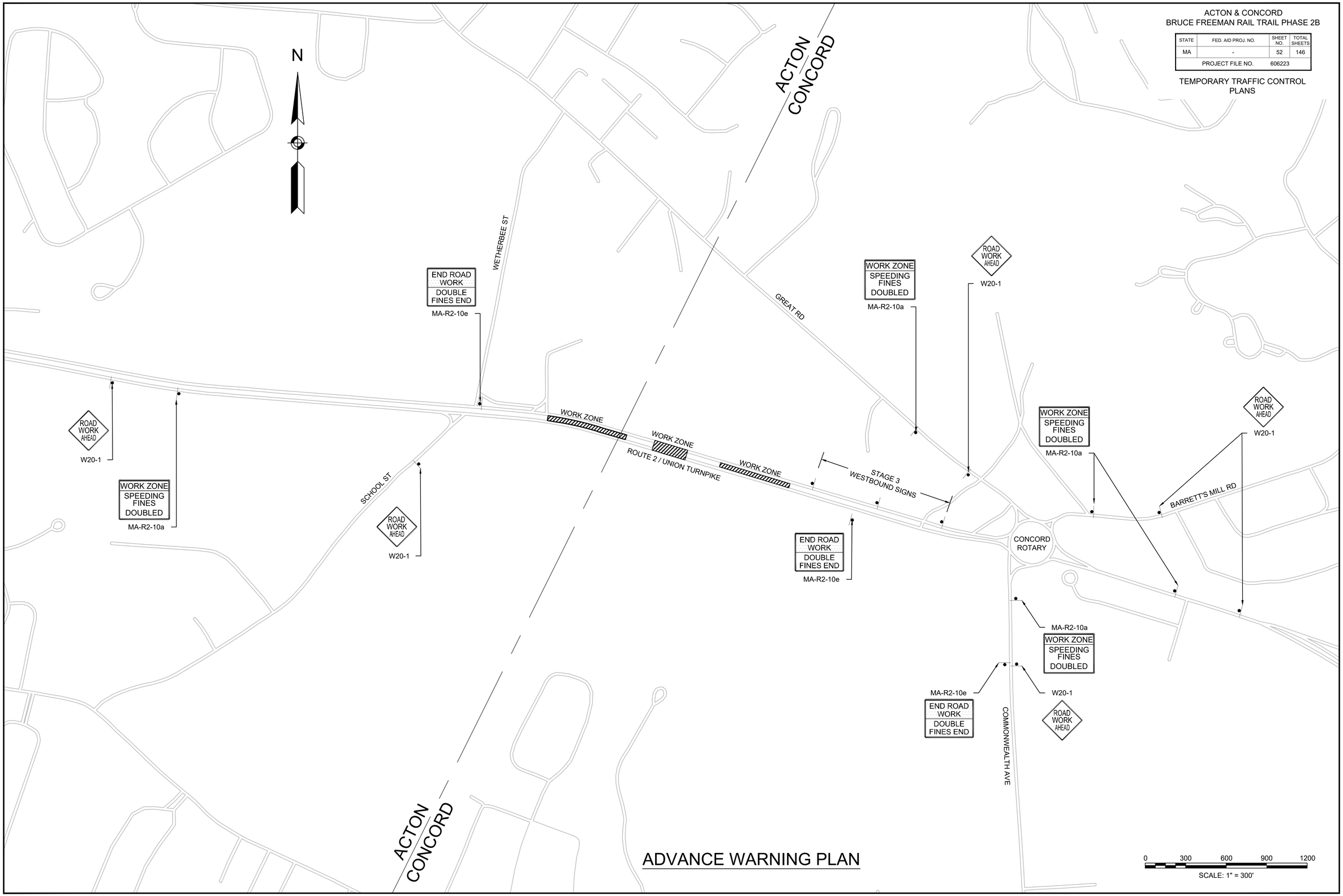

ADVANCE WARNING PLAN

0 300 600 900 1200
SCALE: 1" = 300'

606223_HD_(TTCP).DWG Plotted on 26-Jun-2018 12:06 PM

ACTON & CONCORD
BRUCE FREEMAN RAIL TRAIL PHASE 2B

STATE	FED. AID PROJ. NO.	SHEET NO.	TOTAL SHEETS
MA	-	53	146
PROJECT FILE NO.	606223		

MEDIAN CROSSOVER DETAIL

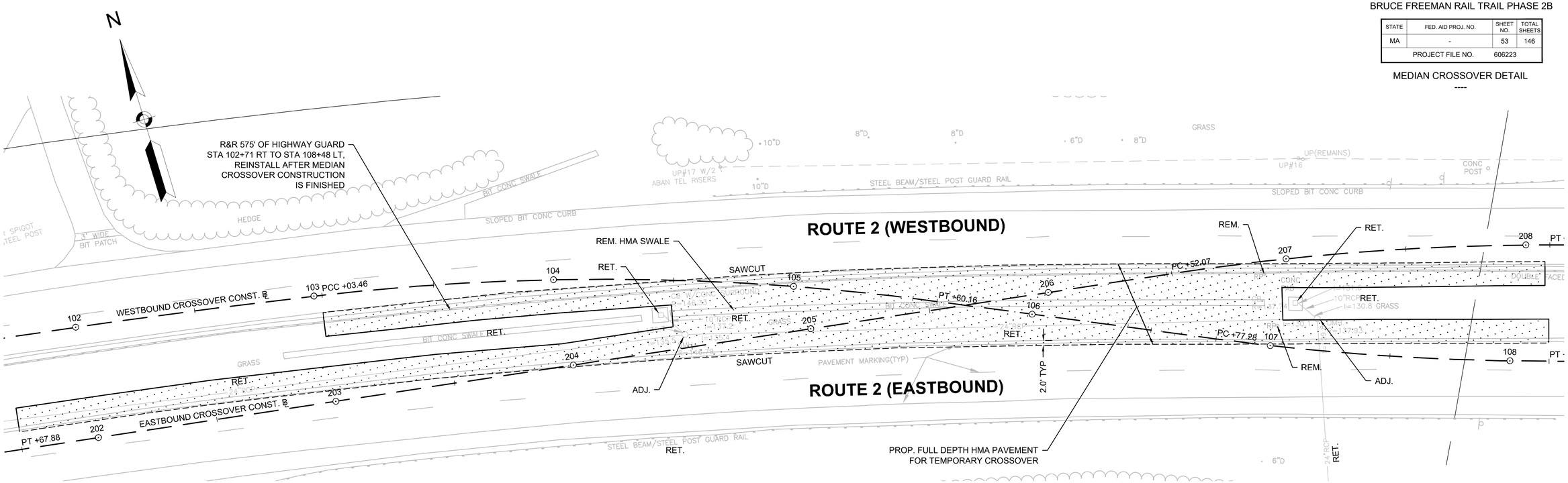

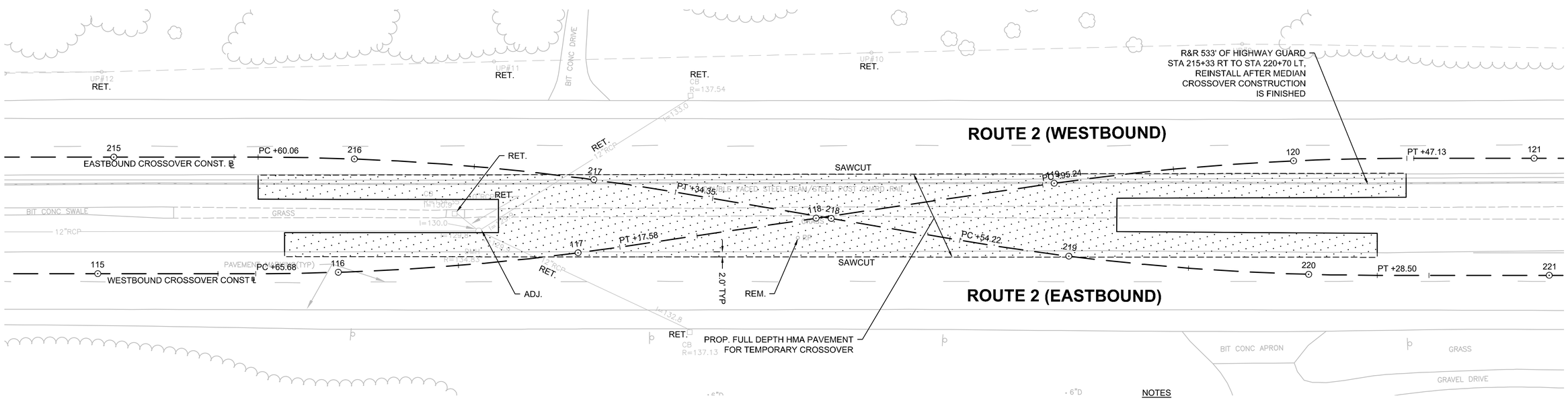

0 20 50 100
SCALE: 1" = 20'

NOTES

1. REFER TO TEMPORARY MEDIAN CROSSOVER CROSS SECTIONS FOR PROPOSED CROSS SLOPES.
2. AFTER WILDLIFE CORRIDOR IS CONSTRUCTED AND CROSSOVERS ARE NO LONGER USED, THE CONTRACTOR SHALL RETURN THE MEDIAN BACK TO ITS ORIGINAL CONDITION INCLUDING REMOVAL OF ALL TEMPORARY HMA AND INSTALLATION OF LOAM AND SEED, CONCRETE SWALE, GUARD RAIL AND SIGNS.

606223_HD_(XDET).DWG Plotted on 26-Jun-2018 12:07 PM

ACTON & CONCORD
BRUCE FREEMAN RAIL TRAIL PHASE 2B

STATE	FED. AID PROJ. NO.	SHEET NO.	TOTAL SHEETS
MA	-	54	146
PROJECT FILE NO.	606223		

LANDSCAPE PLANS
1 OF 9

606223_HD_(LSD).DWG 26-Jun-2018

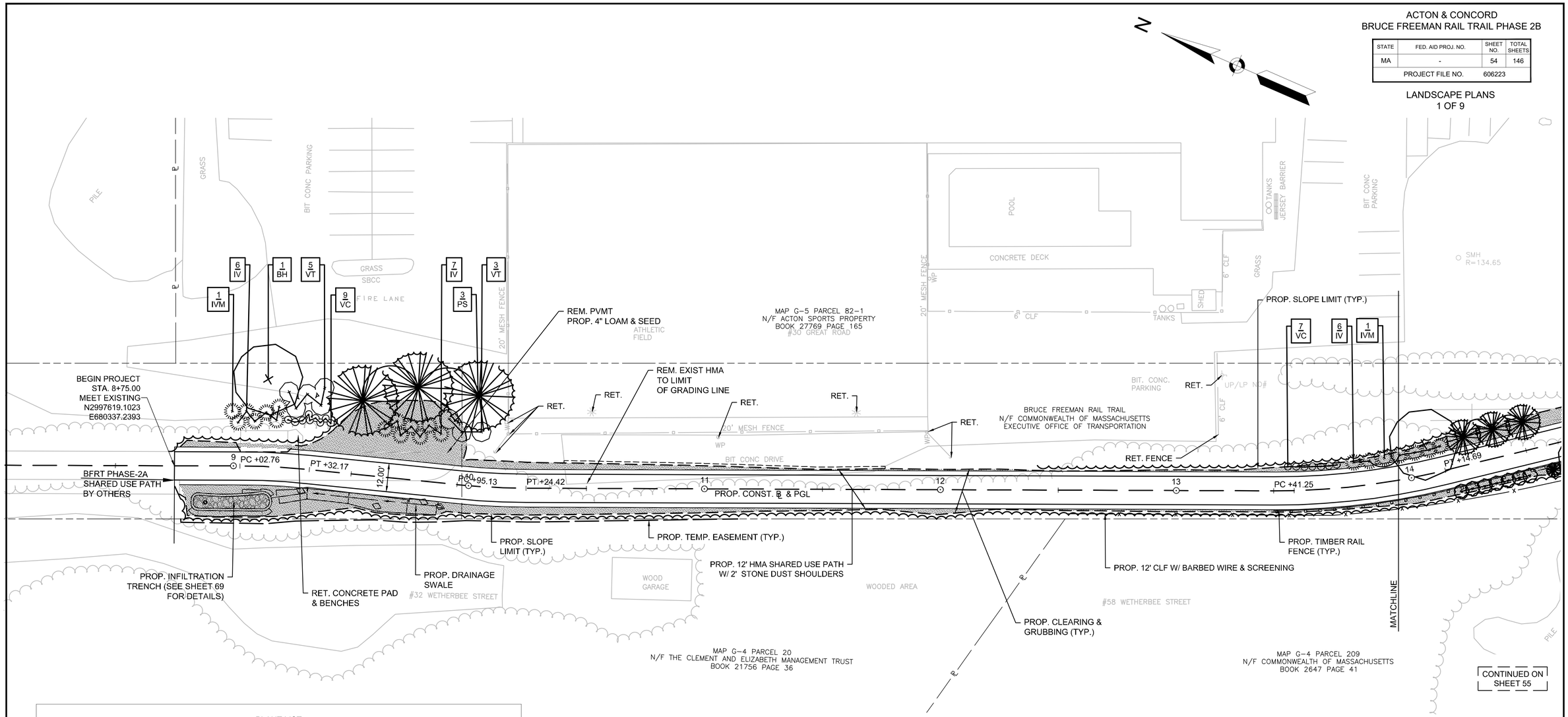

PLANT LIST					
QUANTITY	SYMBOL	BOTANICAL NAME	COMMON NAME	SIZE	NOTES
TREES					
1	BH	BETULA NIGRA 'HERITAGE'	RIVER BIRCH	8-10 FT. CLUMP	B&B
3	PS	PINUS STROBUS	WHITE PINE	5-6 FT.	B&B
SHRUBS					
19	IV	ILEX VERTICILLATA	WINTERBERRY	24-30 IN.	
2	IVM	ILEX VERTICILLATA	WINTERBERRY (MALE)	24-30 IN.	
16	VC	VACCINIUM ANGUSTIFOLIUM	LOWBUSH BLUEBERRY	6-9 IN.	
8	VT	VIBURNUM TRILOBUM	AMERICAN CRANBERRY VIBURNUM	3-4 FT.	

LEGEND

- PROP. EVERGREEN TREE (TYP.)
- PROP. EVERGREEN SHRUB (TYP.)
- PROP. DECIDUOUS TREE (TYP.)
- PROP. DECIDUOUS SHRUB (TYP.)
- PROP. CLEARING LIMIT (TYP.)
- PROP. NATIVE SEED
- PROP. WETLAND SEED
- PROP. AGED PINE BARK MULCH

NOTE:
INVASIVE SPECIES HAVE BEEN FOUND IN ALL AREAS OF VEGETATION WITHIN THE PROJECT LIMITS

PLANTING NOTES
1. CONTRACTOR SHALL HAVE SUBSURFACE UTILITIES MARKED PRIOR TO THE START OF WORK.
2. FINAL LOCATION OF ALL PLANT MATERIAL WILL BE APPROVED BY THE LANDSCAPE ARCHITECT AND/OR TOWN REPRESENTATIVE PRIOR TO PLANTING.
3. ALL PLANT MATERIALS WILL HAVE TAGS INDICATING COMMON NAME, BOTANICAL NAME AND SIZE.
4. ALL PLANTS WILL BE MULCHED PER THE PLANTING SPECIFICATIONS, DETAILS AND SPECIAL PROVISIONS.
5. ALL DISTURBED AREAS WILL BE LOAMED AND SEEDED UNLESS NOTED OTHERWISE.

0 20 50 100
SCALE: 1" = 20'

ACTON & CONCORD
BRUCE FREEMAN RAIL TRAIL PHASE 2B

STATE	FED. AID PROJ. NO.	SHEET NO.	TOTAL SHEETS
MA	-	55	146
PROJECT FILE NO.	606223		

LANDSCAPE PLANS
2 OF 9

606223_HD_(LSD).DWG 26-Jun-2018

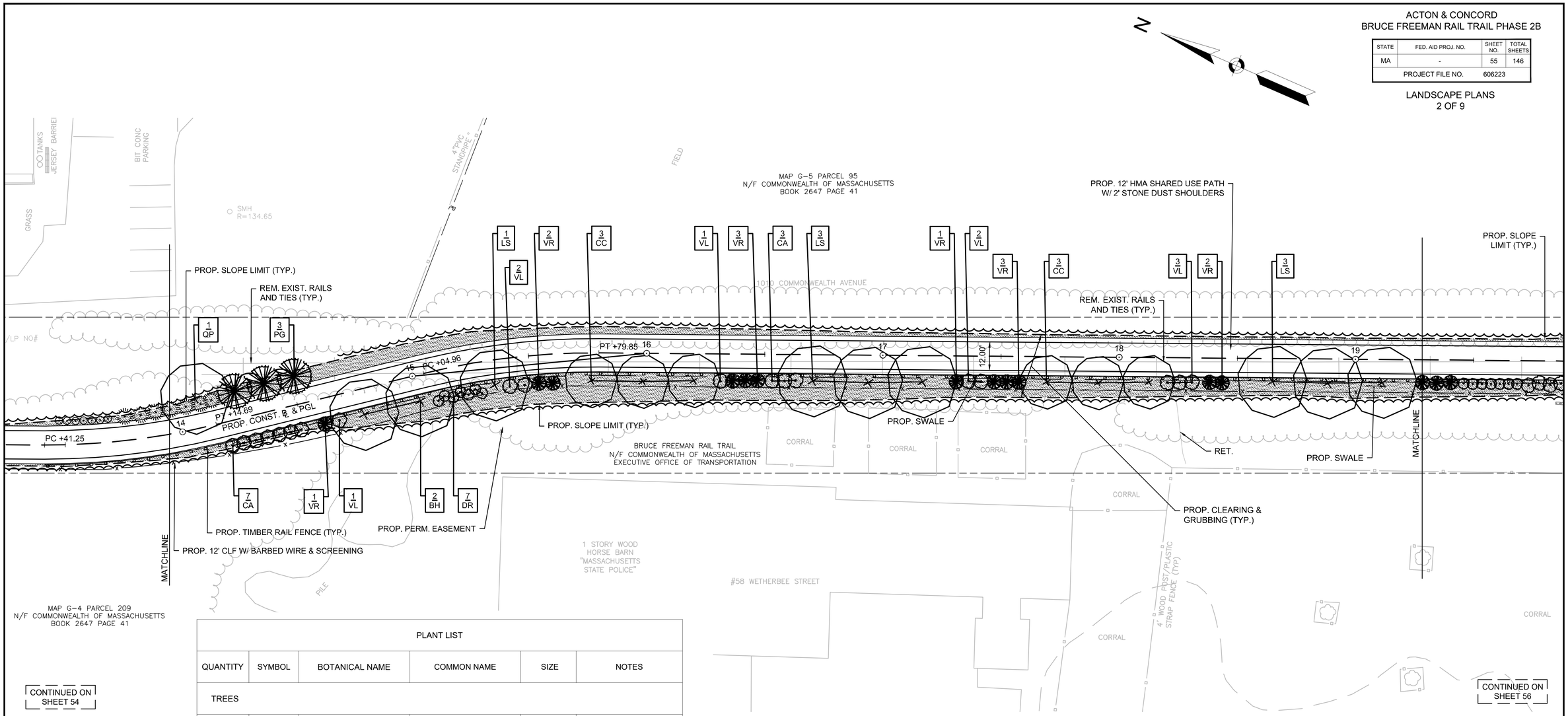

PLANT LIST					
QUANTITY	SYMBOL	BOTANICAL NAME	COMMON NAME	SIZE	NOTES
TREES					
2	BH	BETULA NIGRA 'HERITAGE'	RIVER BIRCH	8-10 FT. CLUMP	B&B
6	CC	CARPINUS CAROLINIANA	HORN BEAM	8-10 FT.	B&B
7	LS	LIQUIDAMBAR STYRACIFLUA	SWEET GUM	2-2.5 IN. CAL.	B&B
3	PG	PICEA GLAUCA	WHITE SPRUCE	7-8 FT.	B&B
1	QP	QUERCUS PALUSTRIS	PIN OAK	2-2.5 IN. CAL.	B&B
SHRUBS					
10	CA	CLETHRA ALNIFOLIA	SUMMER SWEET	18-24 IN.	B&B
7	DR	DIERVILLA RIVULARIS	KODIAK BLACK BUSH HONEYSUCKLE	18-24 IN.	B&B
9	VL	VIBURNUM LENTAGO	NANNYBERRY	24-30 IN.	B&B
12	VR	VIBURNUM RHYTIDOPHYLLUM	LEATHERLEAF VIBURNUM	24-30 IN.	

LEGEND

- PROP. EVERGREEN TREE (TYP.)
- PROP. EVERGREEN SHRUB (TYP.)
- PROP. DECIDUOUS TREE (TYP.)
- PROP. DECIDUOUS SHRUB (TYP.)
- PROP. CLEARING LIMIT (TYP.)
- PROP. NATIVE SEED
- PROP. WETLAND SEED
- PROP. AGED PINE BARK MULCH

NOTE:
INVASIVE SPECIES HAVE BEEN FOUND IN ALL AREAS OF VEGETATION WITHIN THE PROJECT LIMITS

PLANTING NOTES
1. CONTRACTOR SHALL HAVE SUBSURFACE UTILITIES MARKED PRIOR TO THE START OF WORK.
2. FINAL LOCATION OF ALL PLANT MATERIAL WILL BE APPROVED BY THE LANDSCAPE ARCHITECT AND/OR TOWN REPRESENTATIVE PRIOR TO PLANTING.
3. ALL PLANT MATERIALS WILL HAVE TAGS INDICATING COMMON NAME, BOTANICAL NAME AND SIZE.
4. ALL PLANTS WILL BE MULCHED PER THE PLANTING SPECIFICATIONS, DETAILS AND SPECIAL PROVISIONS.
5. ALL DISTURBED AREAS WILL BE LOAMED AND SEEDED UNLESS NOTED OTHERWISE.

0 20 50 100
SCALE: 1" = 20'

ACTON & CONCORD
BRUCE FREEMAN RAIL TRAIL PHASE 2B

STATE	FED. AID PROJ. NO.	SHEET NO.	TOTAL SHEETS
MA	-	56	146
PROJECT FILE NO.	606223		

LANDSCAPE PLANS
3 OF 9

606223_HD_(LSD).DWG 26-Jun-2018

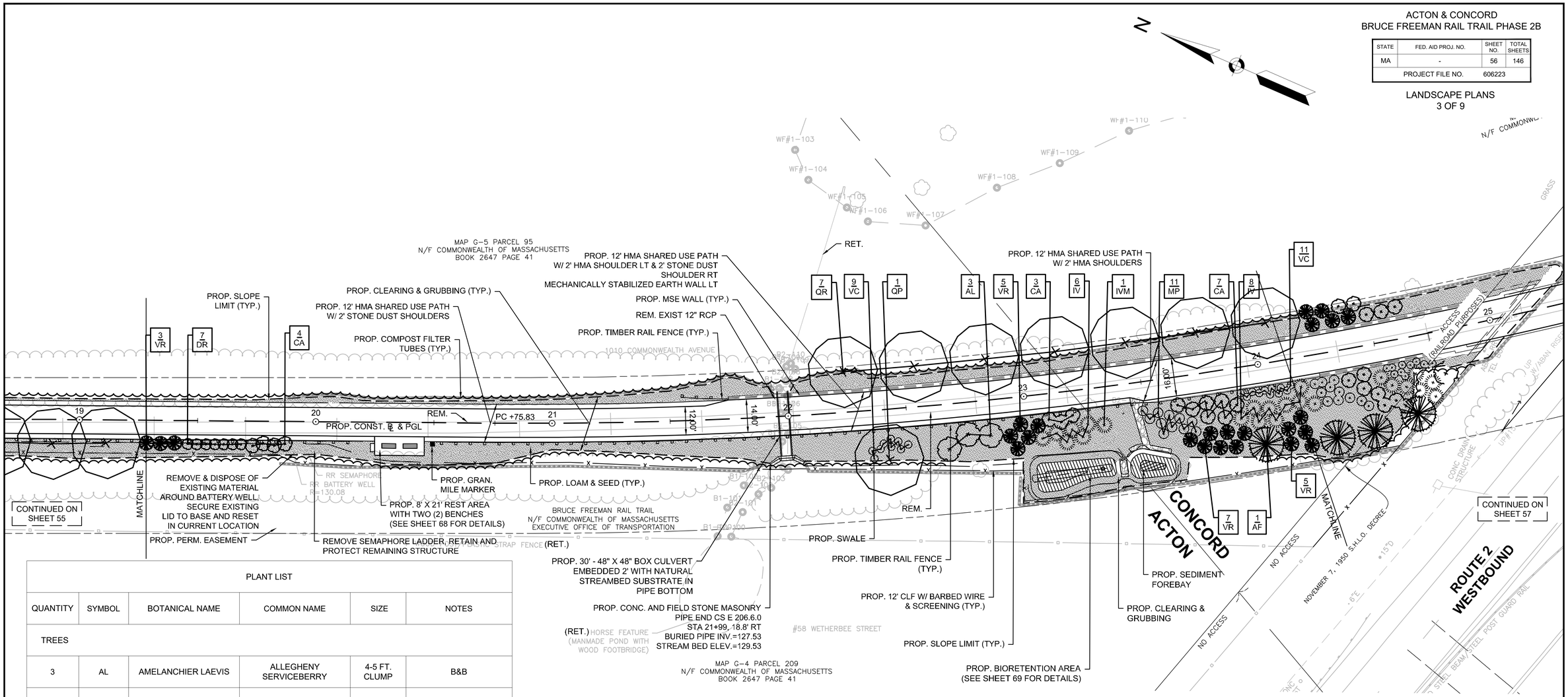

PLANT LIST

QUANTITY	SYMBOL	BOTANICAL NAME	COMMON NAME	SIZE	NOTES
TREES					
3	AL	AMELANCHIER LAEVIS	ALLEGHENY SERVICEBERRY	4-5 FT. CLUMP	B&B
1	AF	ABIES FRASERI	FRASER FIR	5-6 FT.	B&B
1	QP	QUERCUS PALUSTRIS	PIN OAK	2-2.5 IN. CAL.	B&B
7	QR	QUERCUS RUBRA	RED OAK	2-2.5 IN. CAL.	
SHRUBS					
14	CA	CLETHRA ALNIFOLIA	SUMMERSWEET	18-24 IN.	
7	DR	DIERVILLA RIVULARIS	KODIAK BLACK BUSH HONEYSUCKLE	18-24 IN.	B&B
14	IV	ILEX VERTICILLATA	WINTERBERRY	24-30 IN.	
1	IVM	ILEX VERTICILLATA	WINTERBERRY (MALE)	24-30 IN.	
11	MP	MYRICA PENSYLVANICA	BAYBERRY	2-3 FT.	
20	VC	VACCINIUM ANGUSTIFOLIUM	LOWBUSH BLUEBERRY	6-9 IN.	
20	VR	VIBURNUM RHYTIDOPHYLLUM	LEATHERLEAF VIBURNUM	24-30 IN.	

LEGEND

- PROP. EVERGREEN TREE (TYP.)
- PROP. EVERGREEN SHRUB (TYP.)
- PROP. DECIDUOUS TREE (TYP.)
- PROP. DECIDUOUS SHRUB (TYP.)
- PROP. CLEARING LIMIT (TYP.)
- PROP. NATIVE SEED
- PROP. WETLAND SEED
- PROP. AGED PINE BARK MULCH

NOTE:
INVASIVE SPECIES HAVE BEEN FOUND IN ALL AREAS OF VEGETATION WITHIN THE PROJECT LIMITS

PLANTING NOTES
1. CONTRACTOR SHALL HAVE SUBSURFACE UTILITIES MARKED PRIOR TO THE START OF WORK.
2. FINAL LOCATION OF ALL PLANT MATERIAL WILL BE APPROVED BY THE LANDSCAPE ARCHITECT AND/OR TOWN REPRESENTATIVE PRIOR TO PLANTING.
3. ALL PLANT MATERIALS WILL HAVE TAGS INDICATING COMMON NAME, BOTANICAL NAME AND SIZE.
4. ALL PLANTS WILL BE MULCHED PER THE PLANTING SPECIFICATIONS, DETAILS AND SPECIAL PROVISIONS.
5. ALL DISTURBED AREAS WILL BE LOAMED AND SEEDED UNLESS NOTED OTHERWISE.

0 20 50 100
SCALE: 1" = 20'

ACTON & CONCORD
BRUCE FREEMAN RAIL TRAIL PHASE 2B

STATE	FED. AID PROJ. NO.	SHEET NO.	TOTAL SHEETS
MA	-	57	146
PROJECT FILE NO.	606223		

LANDSCAPE PLANS
4 OF 9

606223_HD_(LSD).DWG 26-Jun-2018

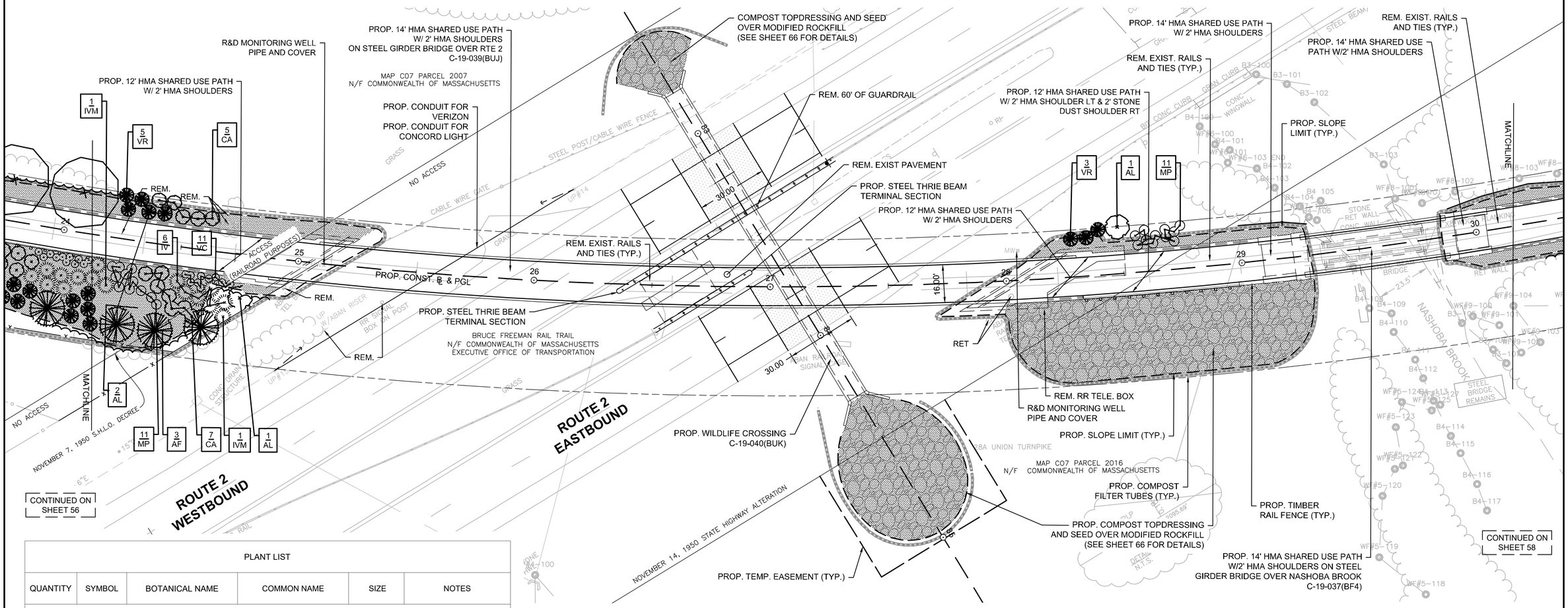

PLANT LIST					
QUANTITY	SYMBOL	BOTANICAL NAME	COMMON NAME	SIZE	NOTES
TREES					
3	AF	ABIES FRASERI	FRASER FIR	5-6 FT.	B&B
4	AL	AMELANCHIER LAEVIS	ALLEGHENY SERVICEBERRY	4-5 FT. CLUMP	B&B
SHRUBS					
12	CA	CLETHRA ALNIFOLIA	SUMMERSWEET	18-24 IN.	
6	IV	ILEX VERTICILLATA	WINTERBERRY	24-30 IN.	
2	IVM	ILEX VERTICILLATA	WINTERBERRY (MALE)	24-30 IN.	
22	MP	MYRICA PENSYLVANICA	BAYBERRY	2-3 FT.	
11	VC	VACCINIUM ANGUSTIFOLIUM	LOWBUSH BLUEBERRY	6-9 IN.	
8	VR	VIBURNUM RHYTIDOPHYLLUM	LEATHERLEAF VIBURNUM	24-30 IN.	B&B

LEGEND

- PROP. EVERGREEN TREE (TYP.)
- PROP. EVERGREEN SHRUB (TYP.)
- PROP. DECIDUOUS TREE (TYP.)
- PROP. DECIDUOUS SHRUB (TYP.)
- PROP. CLEARING LIMIT (TYP.)
- PROP. NATIVE SEED
- PROP. WETLAND SEED
- PROP. AGED PINE BARK MULCH

NOTE:
INVASIVE SPECIES HAVE BEEN FOUND IN ALL AREAS OF VEGETATION WITHIN THE PROJECT LIMITS

PLANTING NOTES
1. CONTRACTOR SHALL HAVE SUBSURFACE UTILITIES MARKED PRIOR TO THE START OF WORK.
2. FINAL LOCATION OF ALL PLANT MATERIAL WILL BE APPROVED BY THE LANDSCAPE ARCHITECT AND/OR TOWN REPRESENTATIVE PRIOR TO PLANTING.
3. ALL PLANT MATERIALS WILL HAVE TAGS INDICATING COMMON NAME, BOTANICAL NAME AND SIZE.
4. ALL PLANTS WILL BE MULCHED PER THE PLANTING SPECIFICATIONS, DETAILS AND SPECIAL PROVISIONS.
5. ALL DISTURBED AREAS WILL BE LOAMED AND SEEDED UNLESS NOTED OTHERWISE.

N

0 20 50 100
SCALE: 1" = 20'

ACTON & CONCORD
BRUCE FREEMAN RAIL TRAIL PHASE 2B

STATE	FED. AID PROJ. NO.	SHEET NO.	TOTAL SHEETS
MA	-	58	146
PROJECT FILE NO.	606223		

LANDSCAPE PLANS
5 OF 9

606223_HD_(LSD)_DWG 26-Jun-2018

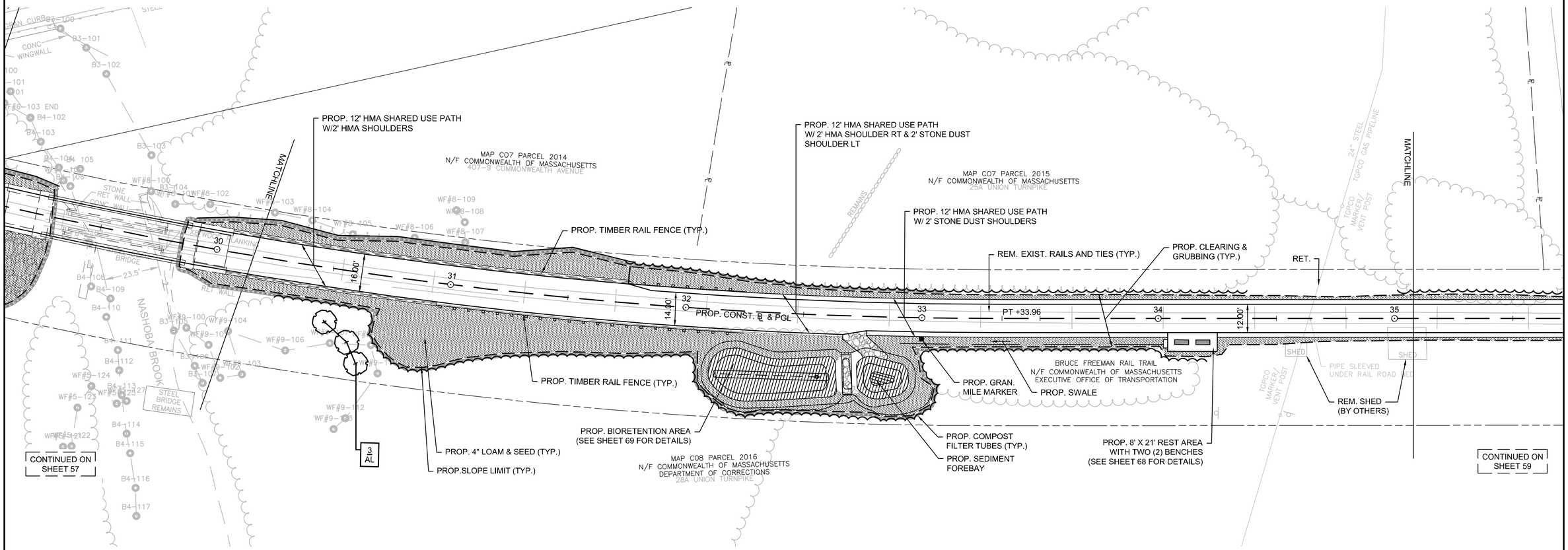

PLANT LIST					
QUANTITY	SYMBOL	BOTANICAL NAME	COMMON NAME	SIZE	NOTES
TREES					
3	AL	AMELANCHIER LAEVIS	ALLEGHENY SERVICEBERRY	4-5 FT. CLUMP	B&B

LEGEND

- PROP. EVERGREEN TREE (TYP.)
- PROP. EVERGREEN SHRUB (TYP.)
- PROP. DECIDUOUS TREE (TYP.)
- PROP. DECIDUOUS SHRUB (TYP.)
- PROP. CLEARING LIMIT (TYP.)
- PROP. NATIVE SEED
- PROP. WETLAND SEED
- PROP. AGED PINE BARK MULCH

NOTE:
INVASIVE SPECIES HAVE BEEN FOUND IN ALL AREAS OF VEGETATION WITHIN THE PROJECT LIMITS

PLANTING NOTES

1. CONTRACTOR SHALL HAVE SUBSURFACE UTILITIES MARKED PRIOR TO THE START OF WORK.
2. FINAL LOCATION OF ALL PLANT MATERIAL WILL BE APPROVED BY THE LANDSCAPE ARCHITECT AND/OR TOWN REPRESENTATIVE PRIOR TO PLANTING.
3. ALL PLANT MATERIALS WILL HAVE TAGS INDICATING COMMON NAME, BOTANICAL NAME AND SIZE.
4. ALL PLANTS WILL BE MULCHED PER THE PLANTING SPECIFICATIONS, DETAILS AND SPECIAL PROVISIONS.
5. ALL DISTURBED AREAS WILL BE LOAMED AND SEEDED UNLESS NOTED OTHERWISE.

0 20 50 100
SCALE: 1" = 20'

ACTON & CONCORD
BRUCE FREEMAN RAIL TRAIL PHASE 2B

STATE	FED. AID PROJ. NO.	SHEET NO.	TOTAL SHEETS
MA	-	59	146
PROJECT FILE NO.	606223		

LANDSCAPE PLANS
6 OF 9

606223_HD_(LSD).DWG 26-Jun-2018

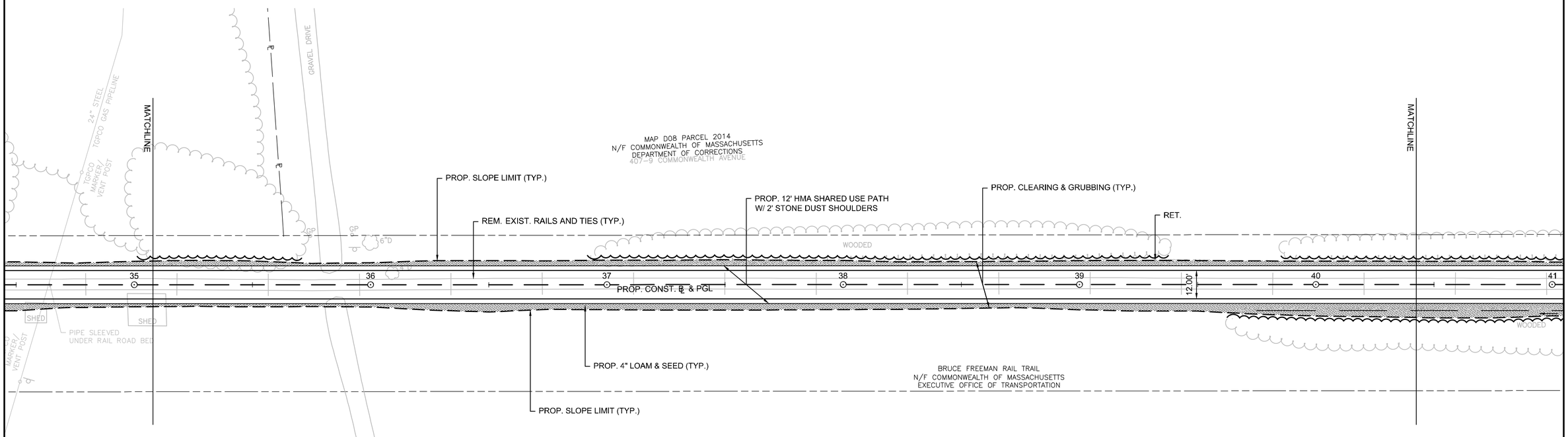

LEGEND

- PROP. EVERGREEN TREE (TYP.)
- PROP. EVERGREEN SHRUB (TYP.)
- PROP. DECIDUOUS TREE (TYP.)
- PROP. DECIDUOUS SHRUB (TYP.)
- PROP. CLEARING LIMIT (TYP.)
- PROP. NATIVE SEED
- PROP. WETLAND SEED
- PROP. AGED PINE BARK MULCH

NOTE:
INVASIVE SPECIES HAVE BEEN FOUND IN ALL AREAS OF VEGETATION WITHIN THE PROJECT LIMITS

PLANTING NOTES

1. CONTRACTOR SHALL HAVE SUBSURFACE UTILITIES MARKED PRIOR TO THE START OF WORK.
2. FINAL LOCATION OF ALL PLANT MATERIAL WILL BE APPROVED BY THE LANDSCAPE ARCHITECT AND/OR TOWN REPRESENTATIVE PRIOR TO PLANTING.
3. ALL PLANT MATERIALS WILL HAVE TAGS INDICATING COMMON NAME, BOTANICAL NAME AND SIZE.
4. ALL PLANTS WILL BE MULCHED PER THE PLANTING SPECIFICATIONS, DETAILS AND SPECIAL PROVISIONS.
5. ALL DISTURBED AREAS WILL BE LOAMED AND SEEDED UNLESS NOTED OTHERWISE.

0 20 50 100
SCALE: 1" = 20'

ACTON & CONCORD
BRUCE FREEMAN RAIL TRAIL PHASE 2B

STATE	FED. AID PROJ. NO.	SHEET NO.	TOTAL SHEETS
MA	-	60	146
PROJECT FILE NO.	606223		

LANDSCAPE PLANS
7 OF 9

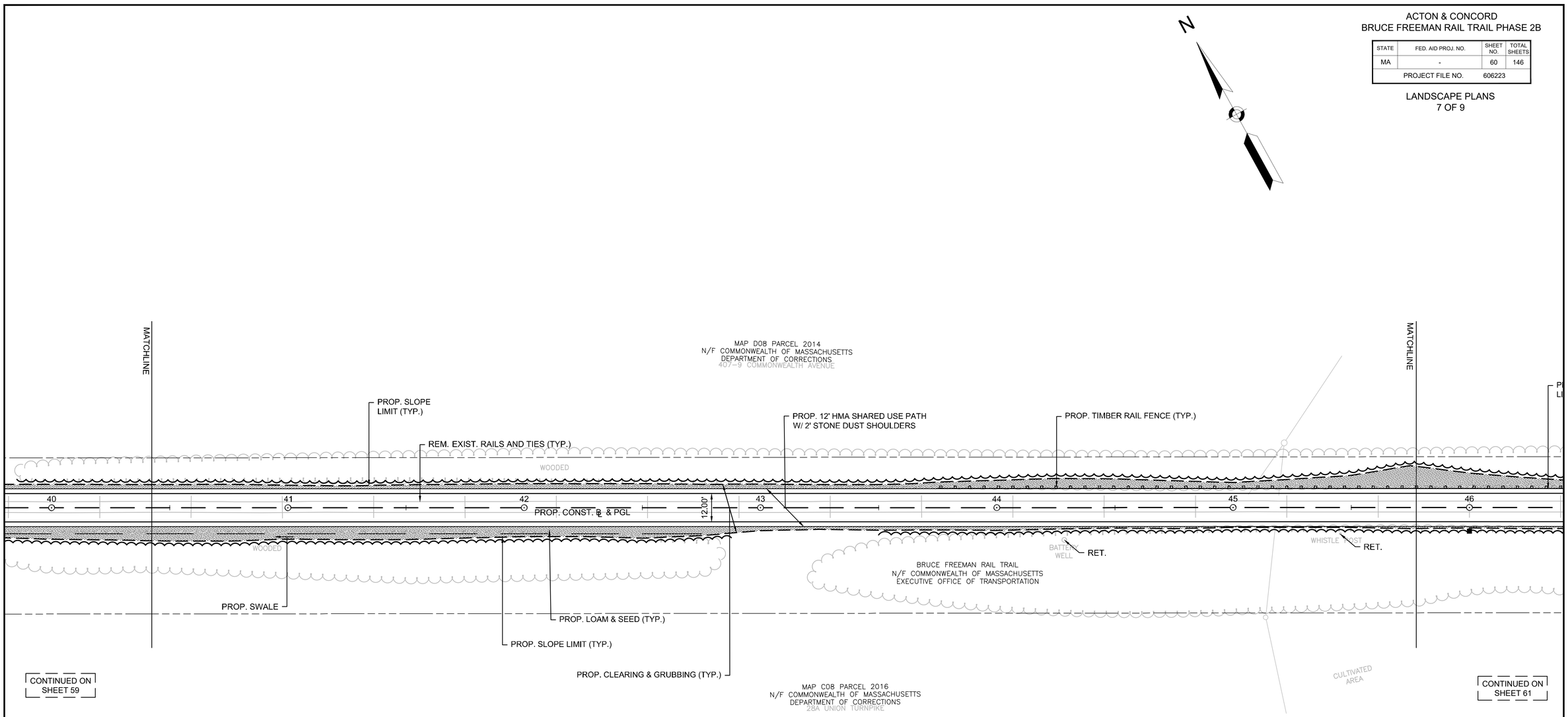

LEGEND

- PROP. EVERGREEN TREE (TYP.)
- PROP. EVERGREEN SHRUB (TYP.)
- PROP. DECIDUOUS TREE (TYP.)
- PROP. DECIDUOUS SHRUB (TYP.)
- PROP. CLEARING LIMIT (TYP.)
- PROP. NATIVE SEED
- PROP. WETLAND SEED
- PROP. AGED PINE BARK MULCH

NOTE:
INVASIVE SPECIES HAVE BEEN FOUND IN ALL AREAS OF VEGETATION WITHIN THE PROJECT LIMITS

PLANTING NOTES

1. CONTRACTOR SHALL HAVE SUBSURFACE UTILITIES MARKED PRIOR TO THE START OF WORK.
2. FINAL LOCATION OF ALL PLANT MATERIAL WILL BE APPROVED BY THE LANDSCAPE ARCHITECT AND/OR TOWN REPRESENTATIVE PRIOR TO PLANTING.
3. ALL PLANT MATERIALS WILL HAVE TAGS INDICATING COMMON NAME, BOTANICAL NAME AND SIZE.
4. ALL PLANTS WILL BE MULCHED PER THE PLANTING SPECIFICATIONS, DETAILS AND SPECIAL PROVISIONS.
5. ALL DISTURBED AREAS WILL BE LOAMED AND SEEDED UNLESS NOTED OTHERWISE.

0 20 50 100
SCALE: 1" = 20'

606223_HD_(LSD).DWG 26-Jun-2018

ACTON & CONCORD
BRUCE FREEMAN RAIL TRAIL PHASE 2B

STATE	FED. AID PROJ. NO.	SHEET NO.	TOTAL SHEETS
MA	-	61	146
PROJECT FILE NO.	606223		

LANDSCAPE PLANS
8 OF 9

606223_HD_(LSD).DWG 26-Jun-2018

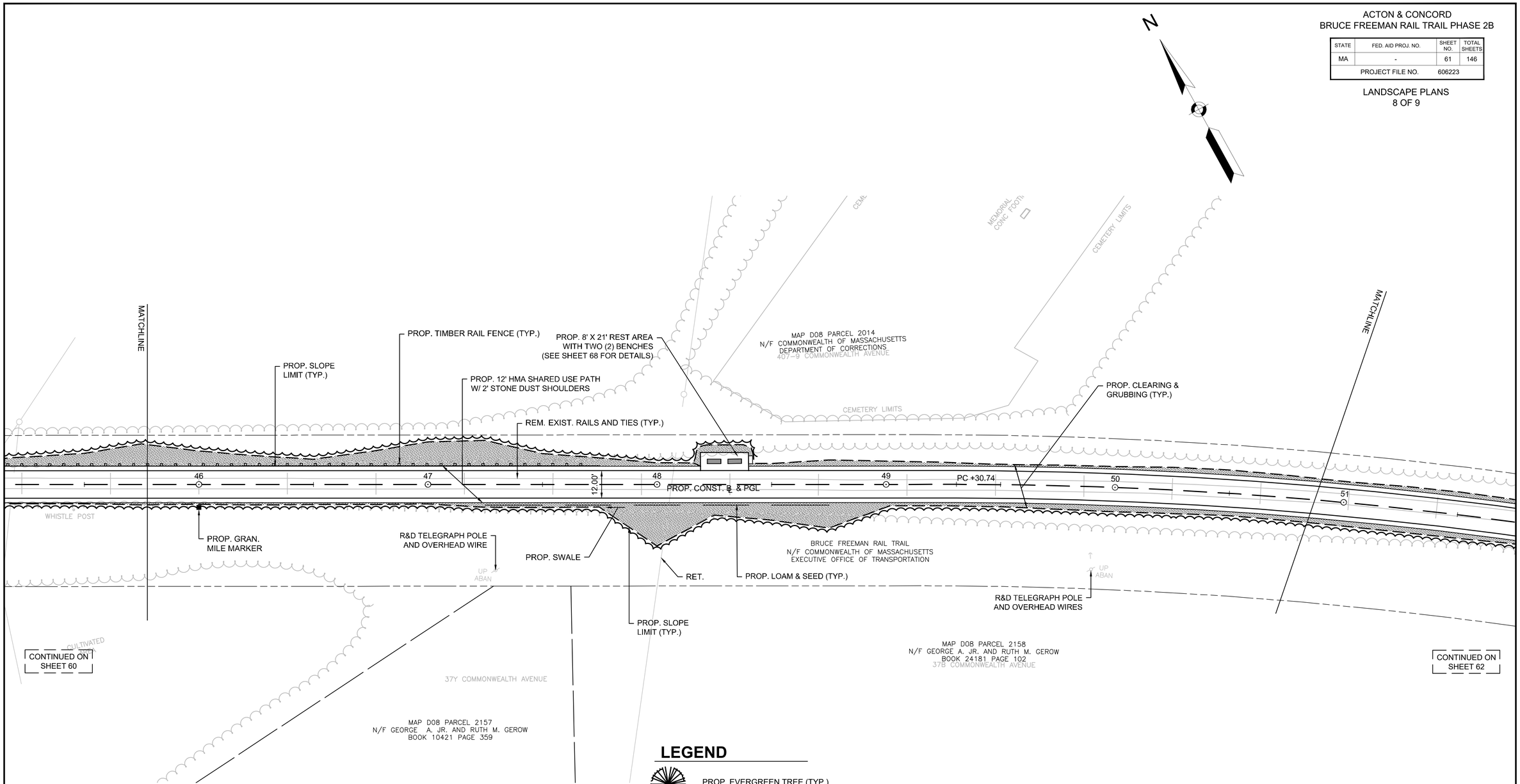

LEGEND

- PROP. EVERGREEN TREE (TYP.)
- PROP. EVERGREEN SHRUB (TYP.)
- PROP. DECIDUOUS TREE (TYP.)
- PROP. DECIDUOUS SHRUB (TYP.)
- PROP. CLEARING LIMIT (TYP.)
- PROP. NATIVE SEED
- PROP. WETLAND SEED
- PROP. AGED PINE BARK MULCH

NOTE:
INVASIVE SPECIES HAVE BEEN FOUND IN ALL AREAS OF VEGETATION WITHIN THE PROJECT LIMITS

PLANTING NOTES

1. CONTRACTOR SHALL HAVE SUBSURFACE UTILITIES MARKED PRIOR TO THE START OF WORK.
2. FINAL LOCATION OF ALL PLANT MATERIAL WILL BE APPROVED BY THE LANDSCAPE ARCHITECT AND/OR TOWN REPRESENTATIVE PRIOR TO PLANTING.
3. ALL PLANT MATERIALS WILL HAVE TAGS INDICATING COMMON NAME, BOTANICAL NAME AND SIZE.
4. ALL PLANTS WILL BE MULCHED PER THE PLANTING SPECIFICATIONS, DETAILS AND SPECIAL PROVISIONS.
5. ALL DISTURBED AREAS WILL BE LOAMED AND SEEDED UNLESS NOTED OTHERWISE.

0 20 50 100
SCALE: 1" = 20'

ACTON & CONCORD
BRUCE FREEMAN RAIL TRAIL PHASE 2B

STATE	FED. AID PROJ. NO.	SHEET NO.	TOTAL SHEETS
MA	-	62	146
PROJECT FILE NO.	606223		

LANDSCPE PLANS
9 OF 9

606223_HD_(LSD).DWG 26-Jun-2018

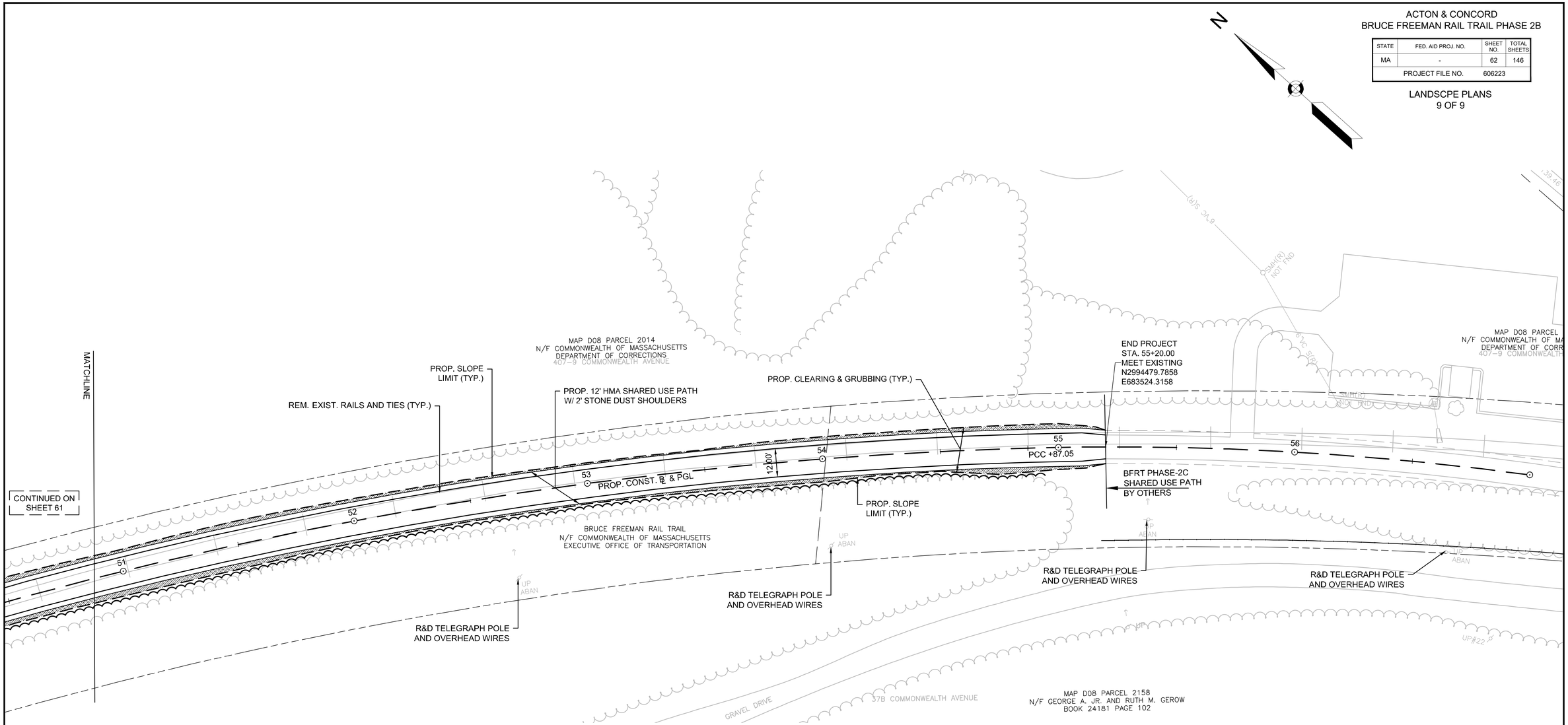

LEGEND

- PROP. EVERGREEN TREE (TYP.)
- PROP. EVERGREEN SHRUB (TYP.)
- PROP. DECIDUOUS TREE (TYP.)
- PROP. DECIDUOUS SHRUB (TYP.)
- PROP. CLEARING LIMIT (TYP.)
- PROP. NATIVE SEED
- PROP. WETLAND SEED
- PROP. AGED PINE BARK MULCH

NOTE:
INVASIVE SPECIES HAVE BEEN FOUND IN ALL AREAS OF VEGETATION WITHIN THE PROJECT LIMITS

PLANTING NOTES

1. CONTRACTOR SHALL HAVE SUBSURFACE UTILITIES MARKED PRIOR TO THE START OF WORK.
2. FINAL LOCATION OF ALL PLANT MATERIAL WILL BE APPROVED BY THE LANDSCAPE ARCHITECT AND/OR TOWN REPRESENTATIVE PRIOR TO PLANTING.
3. ALL PLANT MATERIALS WILL HAVE TAGS INDICATING COMMON NAME, BOTANICAL NAME AND SIZE.
4. ALL PLANTS WILL BE MULCHED PER THE PLANTING SPECIFICATIONS, DETAILS AND SPECIAL PROVISIONS.
5. ALL DISTURBED AREAS WILL BE LOAMED AND SEEDED UNLESS NOTED OTHERWISE.

0 20 50 100
SCALE: 1" = 20'

ACTON & CONCORD
BRUCE FREEMAN RAIL TRAIL PHASE 2B

STATE	FED. AID PROJ. NO.	SHEET NO.	TOTAL SHEETS
MA	-	63	146
PROJECT FILE NO.	606223		

INVASIVE PLANT MANAGEMENT PLAN

26-Jun-2018

INVASIVES LOCATION.DWG

INVASIVES IDENTIFIED

*CELASTRUS ORBICULATUS (BITTERSWEET)

*LONICERA spp. (HONEYSUCKLE)

*RHAMNUS FRAGULA (GLOSSY BUCKTHORN)

ACER PLATANOIDES (NORWAY MAPLE)

EUONYMUS ALATUS (BURNING BUSH)

POLYGONUM CUSPIDATUM (JAPANESE KNOTWEED)

ROSA MULTIFLORA

* DOMINANT INVASIVE SPECIES

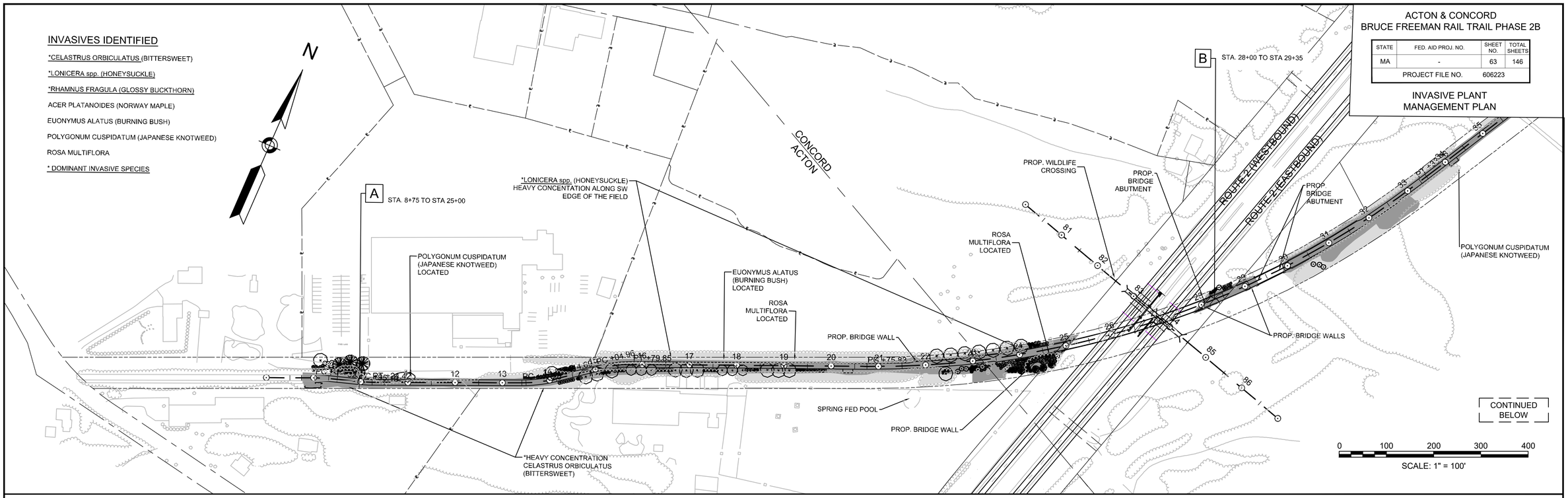

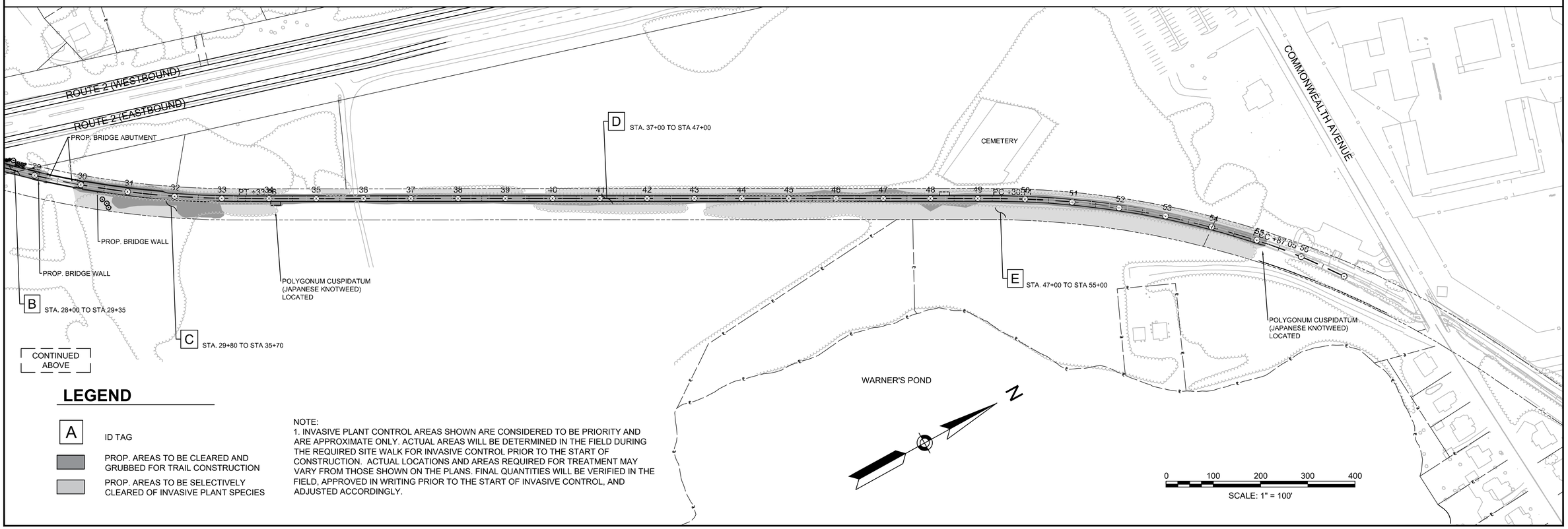

LEGEND

A — ID TAG

PROP. AREAS TO BE CLEARED AND GRUBBED FOR TRAIL CONSTRUCTION

PROP. AREAS TO BE SELECTIVELY CLEARED OF INVASIVE PLANT SPECIES

NOTE:
1. INVASIVE PLANT CONTROL AREAS SHOWN ARE CONSIDERED TO BE PRIORITY AND ARE APPROXIMATE ONLY. ACTUAL AREAS WILL BE DETERMINED IN THE FIELD DURING THE REQUIRED SITE WALK FOR INVASIVE CONTROL PRIOR TO THE START OF CONSTRUCTION. ACTUAL LOCATIONS AND AREAS REQUIRED FOR TREATMENT MAY VARY FROM THOSE SHOWN ON THE PLANS. FINAL QUANTITIES WILL BE VERIFIED IN THE FIELD, APPROVED IN WRITING PRIOR TO THE START OF INVASIVE CONTROL, AND ADJUSTED ACCORDINGLY.

PLANT SCHEDULE

SH 1	SH 2	SH 3	SH 4	SH 5	TOTAL QTY.	KEY	BOTANICAL NAME	COMMON NAME	INSTALL SIZE	COMMENTS
TREES										
-	-	1	3	-	4	AF	ABIES FRASERI	FRASER FIR	5-6 FT.	B&B
-	-	3	4	3	10	AL	AMELANCHIER LAEVIS	ALLEGHENY SERVICEBERRY	4-5 FT. CLUMP	B&B
1	2	-	-	-	3	BH	BETULA NIGRA 'HERITAGE'	RIVER BIRCH	8-10 FT. CLUMP	B&B
-	6	-	-	-	6	CC	CARPINUS CAROLINIANA	HORNBEAM	8-10 FT	B&B
-	7	-	-	-	7	LS	LIQUIDAMBAR STYRACIFLUA	SWEETGUM	2.-2.5 IN. CAL.	B&B
-	3	-	-	-	3	PG	PICEA GLAUCA	WHITE SPRUCE	7-8 FT.	B&B
3	-	-	-	-	3	PS	PINUS STROBUS	WHITE PINE	5-6 FT.	B&B
-	1	1	-	-	2	QP	QUERCUS PALUSTRIS	PIN OAK	2-2.5 IN. CAL.	B&B
-	-	7	-	-	7	QR	QUERCUS RUBRA	RED OAK	2-2.5 IN. CAL.	B&B
SHRUBS										
-	10	14	12	-	36	CA	CLETHRA ALNIFOLIA	SUMMERSWEET	18-24 IN.	
-	7	7	-	-	14	DR	DIERVILLA RIVULARIS	KODIAK BLACK BUSH HONEYSUCKLE	18-24 IN.	B&B
19	-	14	6	-	39	IV	ILEX VERTICILLATA	WINTERBERRY	24-30 IN.	
2	-	1	2	-	5	IVM	ILEX VERTICILLATA	WINTERBERRY (MALE)	18-24 IN.	
-	-	11	22	-	33	MP	MYRICA PENSYLVANICA	BAYBERRY	2-3 FT.	
16	-	20	11	-	47	VC	VACCINIUM ANGUSTIFOLIUM	LOWBUSH BLUEBERRY	6-9 IN.	
8	-	-	-	-	8	VT	VIBURNUM TRILOBUM	AMERICAN CRANBERRY VIBURNUM	3-4 FT..	
-	9	-	-	-	9	VL	VIBURNUM LENTAGO	NANNYBERRY	24-30 IN.	B&B
-	12	20	8		40	VR	VIBURNUM RHYTIDOPHYLLUM	LEATHERLEAF VIBURNUM	24-30 IN.	

SEEDING SCHEDULE

LEGEND	TYPE	SUB TYPE	ITEM	NOTES
NATIVE - SUN/PART SHADE UPLAND				
	NATIVE SEED MIX	TRAILSIDE - MID HEIGHT UPLAND MIX - PART SHADE	765.421	FOR TRAILSIDE USE WHERE NO MOWING / INFREQUENT MOWING EXPECTED. SEED OVER 1" COMPOST TOPDRESSING OVER 4" LOAM.
WETLAND				
	WETLAND SEED MIX	FACW - SEASONALLY FLOODED - CUSTOM MIX	765.554	FOR USE IN WETLAND MITIGATION AND BIORETENTION AREAS. SEED OVER 1" COMPOST TOP-DRESSING OVER 4" LOAM.

LANDSCAPE NOTES:

1. ALL DIMENSION LINES ARE EITHER PARALLEL OR PERPENDICULAR TO LINES FROM WHICH THEY ARE DRAWN UNLESS OTHERWISE INDICATED ON THE DRAWINGS.

2. BEFORE CONSTRUCTION BEGINS, SUBMITTALS MUST BE APPROVED, ALL LOCATIONS SHALL BE STAKED IN THE FIELD, MOCKUPS CONSTRUCTED AND VERIFIED BY THE CONTRACTOR AND REVIEWED BY THE ENGINEER. ADJUSTMENTS SHALL BE MADE AT NO ADDITIONAL COST TO THE DEPARTMENT.

3. REFER TO SPECIFICATIONS FOR MATERIALS AND INSTALLATION.

PLANTING NOTES:

1. ALL PLANT MATERIAL SHALL CONFORM TO THE GUIDELINES ESTABLISHED BY THE 'AMERICAN STANDARD FOR NURSERY STOCK' PUBLISHED BY AMERICAN ASSOCIATION OF NURSERYMEN, LATEST EDITION, OR AS INDICATED IN THE PLANT LIST, WHICH SHALL GOVERN.

2. ALL PLANT MATERIAL SHALL BE FIELD SELECTED IN NURSERIES BY THE ENGINEER AFTER PRELIMINARY TAGGING BY CONTRACTOR. ALL STOCK SHALL BE NURSERY GROWN.

3. ENGINEER SHALL REVIEW PLACEMENT OF PLANTS IN FIELD BEFORE INSTALLATION AFTER STAKING IN FIELD BY CONTRACTOR ACCORDING TO PLANTING PLANS AND SITE DETAILS. THE CONTRACTOR SHALL INFORM THE ENGINEER IMMEDIATELY OF ANY CONFLICTS BETWEEN PROPOSED PLANT LOCATIONS AND BELOW GRADE UTILITIES, STRUCTURES, DRAINAGE PROBLEMS, OR ANY OTHER PLANTING CONFLICT ENCOUNTERED OR ANTICIPATED AND REVIEWED WITH THE ENGINEER BEFORE CONSTRUCTION COMMENCES.

4. THE CONTRACTOR SHALL SUPPLY ALL PLANT MATERIALS IN SIZES AND QUANTITIES SUFFICIENT TO COMPLETE THE PLANTING SHOWN ON THE DRAWINGS. THE NUMBERS OF PLANTS GIVEN IN MASSINGS AND ON THE PLANT LIST IS APPROXIMATE AND CONTRACTOR SHALL PLANT SHRUBS AND TREES AT INDICATED SPACING AS INDICATED ON THE PLANS. THE ENGINEER HAS THE RIGHT TO REJECT INJURED, DISEASED, DESICCATED, OR INCORRECT SPECIES AT ANY TIME.

5. ALL PLANTS THAT ARE DELIVERED TO THE SITE AND NOT PLANTED IMMEDIATELY SHALL BE STORED AND WATERED PROPERLY, ACCORDING TO THE SPECIFICATIONS, IN SECURE LOCATIONS REVIEWED BY THE ENGINEER. ALL PLANTS SHALL HAVE ONE YEAR GUARANTEE.

6. ALL NEW AND EXISTING PLANT MATERIAL WITHIN THE LANDSCAPE LIMIT OF WORK LINE SHALL BE PRUNED AFTER PLANTING TO REMOVE ALL DEAD OR DAMAGED BRANCHES. TREE WOUND DRESSING SHALL NOT BE USED ON ANY PLANTINGS. ALL NEW PLANTINGS SHALL BE WATERED FROM DELIVERY UNTIL THE END OF THE GUARANTEE PERIOD.

7. ALL PLANTS SHALL BEAR THE SAME RELATION TO FINISHED GRADE AS TO ORIGINAL GRADE BEFORE DIGGING, UNLESS OTHERWISE DETAILED, AND SHALL HAVE A MULCHED SAUCER ACCORDING TO THE DETAILS. PLANT PITS SHALL DRAIN, OR REMEDIAL UNDER-DRAINAGE SHALL BE INSTALLED TO DRAIN OUTLETS.

8. ALL PAPER OR PLASTIC CONTAINERS, WIRE BASKETS, TWINE, AND PLASTIC OR IRON FASTENERS AND ROPE SHALL BE REMOVED FROM PLANTS BEFORE SETTING IN PLANT PIT. TURN DOWN BURLAP TWO-THIRDS.

9. EXISTING TOPSOILS SHALL BE UTILIZED FOR LOAM, OR PLANTING SOIL MIXTURES, ONLY IF TESTING INDICATES TOTAL CONFORMITY TO SPECIFICATIONS FOR LOAM BORROW. ALL GRASS, SOD, ROOTS, AND STONES OVER TWO-INCH DIAMETER SHALL BE REMOVED AND LEGALLY DISPOSED OF.

10. SHRUBS SHALL BE INSTALLED AND MAINTAINED 10' CLEAR FROM ALL HYDRANTS AND STANDPIPES TO ENSURE THEIR VISIBILITY AT ALL TIMES.

11. PLANT SPACING SHALL BE AS INDICATED ON THE DRAWINGS OR IN THE PLANT LIST. MULCH WITH 2-3" AGED PINE BARK MULCH TO LIMITS.

12. TREE PROTECTION FENCING SHALL BE INSTALLED BEFORE CONSTRUCTION VEHICLES ACCESS OR CONSTRUCTION OCCURS WITHIN 25' OF ANY EXISTING TREE TO REMAIN. FENCING SHALL BE INSTALLED AT TREE DRIPLINE OR EDGE OF ADJACENT PAVING AND IN ACCORDING TO CIVIL PLANS AND WITH REVIEW OF ENGINEER. REMOVAL SHALL BE AT COMPLETION OF CONSTRUCTION IN THE VICINITY.

LOAM & GRADING NOTES:

1. ANY DISCREPANCIES OR CONFLICTS ARISING BETWEEN EXISTING CONDITIONS AND THE GRADING PLANS SHALL BE BROUGHT TO THE ATTENTION OF THE ENGINEER BEFORE PROCEEDING.

2. GRADE STAKES SHOWING DEPTH OF LOAM SHALL BE REVIEWED BY ENGINEER IN FIELD BEFORE FINAL GRADING CAN COMMENCE.

3. ALL NEW ON-GRADE PLANTINGS SHALL HAVE MODIFIED LOAM (PLANTING SOIL), INSTALLED AT A DEPTH AS INDICATED ON THE DRAWINGS AND SPECIFICATIONS. ALL SEEDED AREAS SHALL HAVE FOUR INCH DEPTH MODIFIED LOAM. LOAM BORROW SHALL BE REQUIRED TO BE TESTED FOR CONFORMANCE WITH SPECIFICATIONS BEFORE DELIVERY OF PRODUCT FOR SPREADING. SOIL MAY NOT BE WORKED IN A WET OR FROZEN STATE OR LOAM BORROW MAY BE REJECTED BY THE ENGINEER.

4. AREAS WHERE PLANTING OR SEEDING OCCURS ON EXISTING GRADES AREAS SHALL BE CLEARED, DISCED AND/OR FILLED AND SOIL AMENDED TO MEET THE RANGES AND MINIMUM REQUIREMENTS FOR MODIFIED LOAM BORROW. IF EXISTING SOIL CANNOT BE AMENDED TO MEET SPECIFICATIONS, IT SHALL BE EXCAVATED AND REPLACED WITH APPROVED LOAM BORROW.

5. ALL EXISTING OR PROPOSED INLET COVERS, GRATES, ETC. SHALL BE SET AND ADJUSTED BY THE CONTRACTOR TO BE FLUSH WITH THE FINISHED GRADE AT NO EXTRA COST TO THE DEPARTMENT.

6. THE CONTRACTOR'S WORK SHALL BE SCHEDULED TO ALLOW THE FINISHED SUBGRADE ELEVATIONS TO DRAIN PROPERLY WITHOUT PUDDLING. PROVIDE TEMPORARY POSITIVE DRAINAGE AS REQUIRED.

7. THE PROPOSED SITE PAVEMENTS, SURFACINGS, AND PLANTED AREAS SHALL BE PITCHED IN THE DIRECTIONS SHOWN ON THE DRAWINGS. IF NOT OTHERWISE SHOWN, PROPOSED PAVEMENT AREAS SHALL BE PITCHED A MINIMUM OF ONE PERCENT IN THE DIRECTION SHOWN ON THE DRAWINGS, AND PROPOSED SEEDED AND PLANTED AREAS SHALL BE PITCHED IN A MINIMUM OF ONE PERCENT TOWARD A DRAIN INLET OR BASIN.

8. CONTRACTOR SHALL MEET EXISTING GRADES IN A SMOOTH MANNER, WITHOUT DISTURBING DRAINAGE CONDITIONS, AND SHALL PROTECT EXISTING VEGETATION AND PROTECTIVE FENCING. THE CONTRACTOR SHALL REQUEST THAT THE ENGINEER REVIEW THE FINISHED GRADES BEFORE PLANTING AND SEEDING BEGIN.

ACTON & CONCORD
BRUCE FREEMAN RAIL TRAIL PHASE 2B

STATE	FED. AID PROJ. NO.	SHEET NO.	TOTAL SHEETS
MA	-	65	146
PROJECT FILE NO.	606223		

LANDSCAPE DETAILS

606223_HD_(LSD).DWG 26-Jun-2018

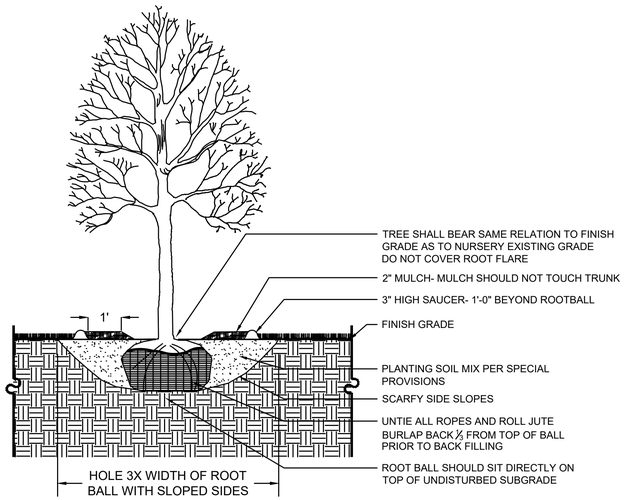

NOTE:

PLANT MATERIAL SHALL NOT BE BROUGHT TO THE SITE IN WIRE BASKETS OR IN POLY-BURLAP

1 DECIDUOUS TREE PLANTING
NOT TO SCALE

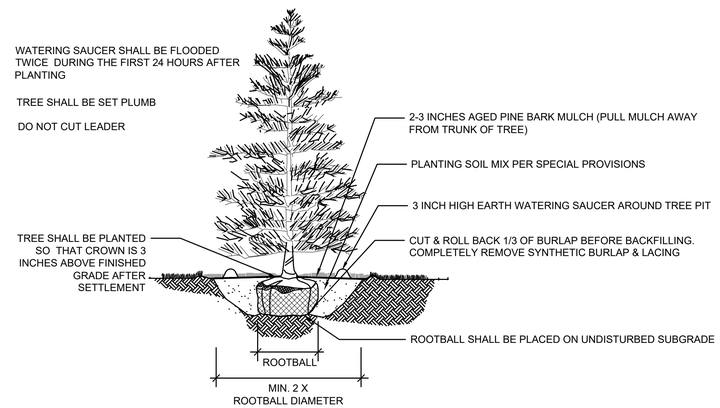

2 EVERGREEN TREE PLANTING
NOT TO SCALE

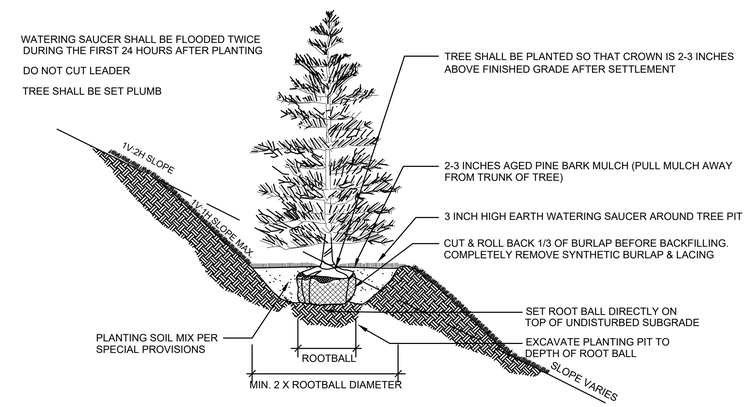

3 EVERGREEN TREE PLANTING (SLOPE)
NOT TO SCALE

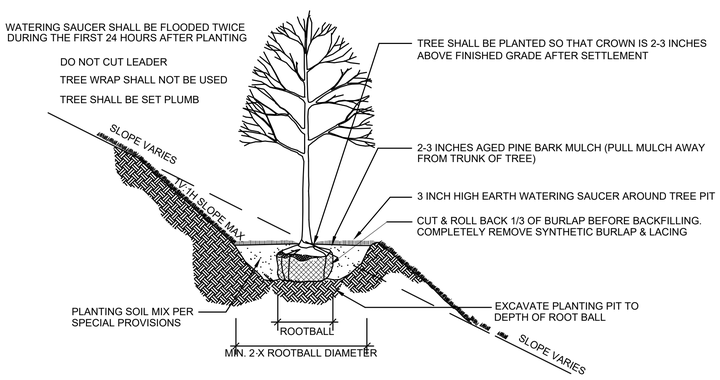

4 DECIDUOUS TREE PLANTING (SLOPE)
NOT TO SCALE

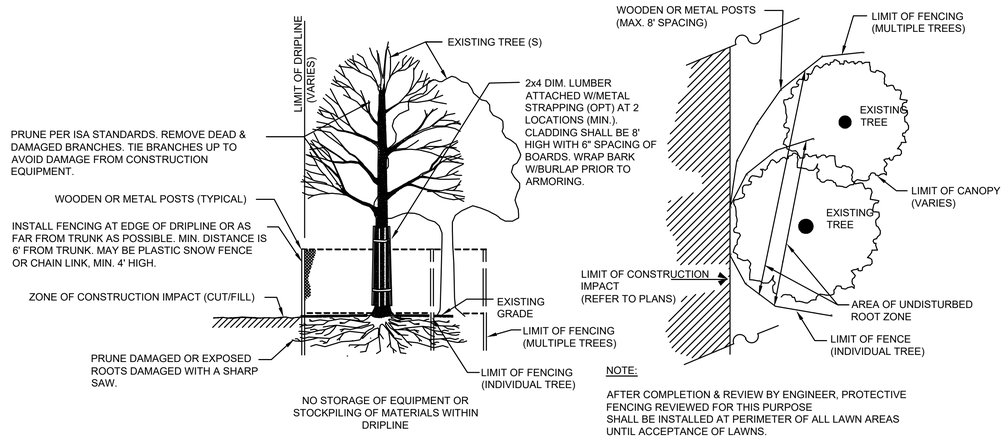

NOTE:

AFTER COMPLETION & REVIEW BY ENGINEER, PROTECTIVE FENCING REVIEWED FOR THIS PURPOSE SHALL BE INSTALLED AT PERIMETER OF ALL LAWN AREAS UNTIL ACCEPTANCE OF LAWNS.

5 TEMPORARY TREE PROTECTION FENCING
NOT TO SCALE

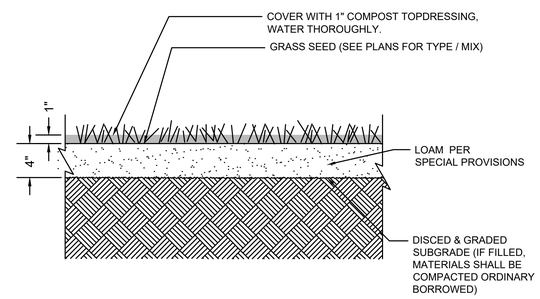

6 LOAM, SEED, & COMPOST TOPDRESSING
NOT TO SCALE

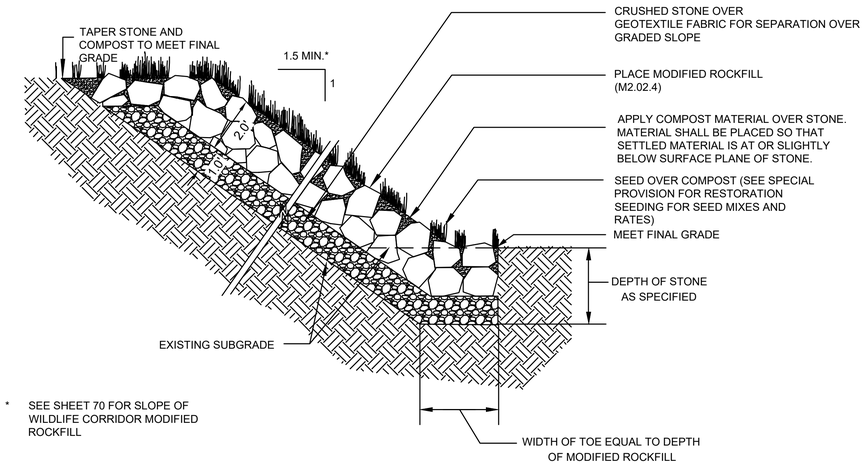

* SEE SHEET 70 FOR SLOPE OF WILDLIFE CORRIDOR MODIFIED ROCKFILL

7 COMPOST TOPDRESSING AND SEED OVER MODIFIED ROCKFILL

NOT TO SCALE

20111021_MassDOT

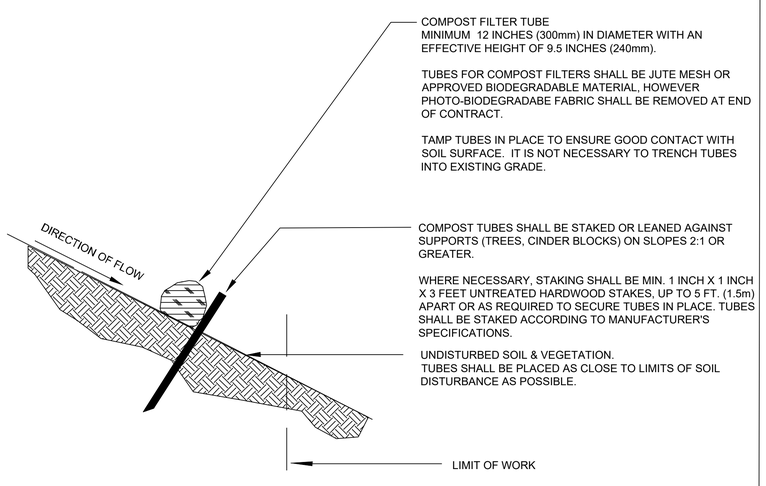

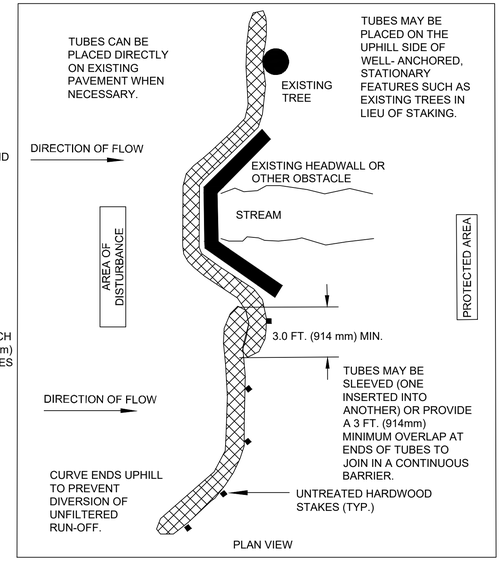

GENERAL NOTES:

1. PROVIDE A MINIMUM TUBE DIAMETER OF 12 INCHES (300mm) FOR SLOPES UP TO 50 FEET (15.24m) IN LENGTH WITH A SLOPE RATIO OF 3H:1V OR STEEPER. LONGER SLOPES OF 3H:1V MAY REQUIRE LARGER TUBE DIAMETER OR ADDITIONAL COURSING OF FILTER TUBES TO CREATE A FILTER BERM. REFER TO MANUFACTURER'S RECOMMENDATIONS FOR SITUATIONS WITH LONGER OR STEEPER SLOPES.
2. INSTALL TUBES ALONG CONTOURS AND PERPENDICULAR TO SHEET OR CONCENTRATED FLOW.
3. TUBE LOCATION MAY BE SHIFTED TO ADJUST TO LANDSCAPE FEATURES, BUT SHALL PROTECT UNDISTURBED AREA AND VEGETATION TO MAXIMUM EXTENT POSSIBLE.
4. DO NOT INSTALL IN PERENNIAL, EPHEMERAL OR INTERMITTENT STREAMS.
5. ADDITIONAL TUBES SHALL BE USED AT THE DIRECTION OF THE ENGINEER.
6. ADDITIONAL STAKING SHALL BE USED AT THE DIRECTION OF THE ENGINEER.

8 COMPOST FILTER TUBE DETAIL

NOT TO SCALE

20150226_MassDOT_rev7

NOTES:

1. TIMBER PRESERVATIVES SHALL BE USED ON ALL WOOD TIMBER.
2. ALL CUT ENDS SHALL BE PAINTED WITH PRESERVATIVE IN THE FIELD PER MANUFACTURERS DIRECTION.

ACTON & CONCORD
BRUCE FREEMAN RAIL TRAIL PHASE 2B

STATE	FED. AID PROJ. NO.	SHEET NO.	TOTAL SHEETS
MA	-	67	146
PROJECT FILE NO.	606223		

CONSTRUCTION DETAILS

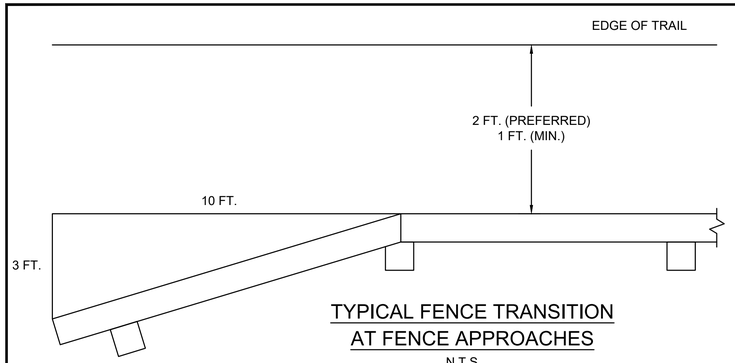

TYPICAL FENCE TRANSITION AT FENCE APPROACHES
N.T.S.

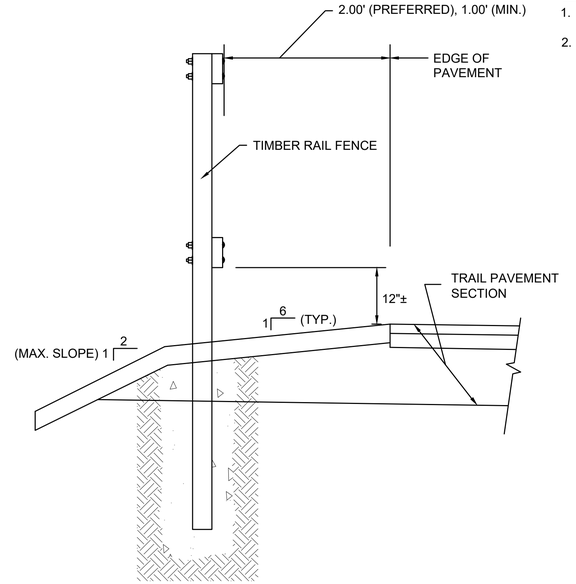

SECTION A-A

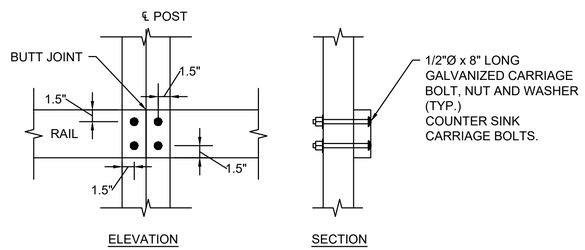

BUTT JOINT CONNECTION
N.T.S.

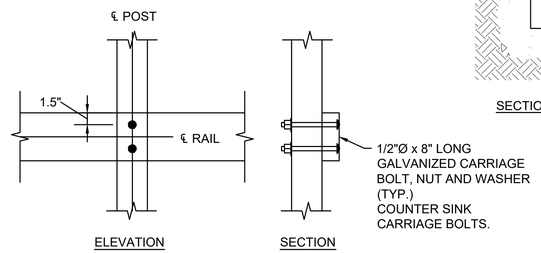

INTERMEDIATE CONNECTION
N.T.S.

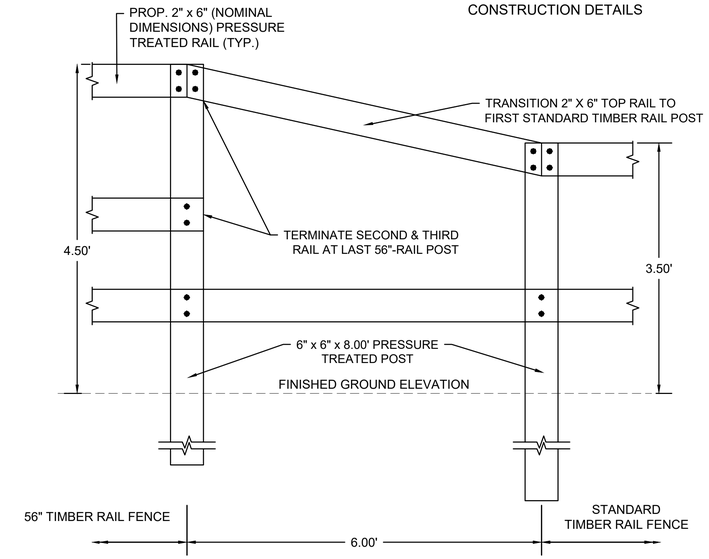

56" TIMBER RAIL FENCE TRANSITION TO STANDARD TIMBER RAIL FENCE
N.T.S.

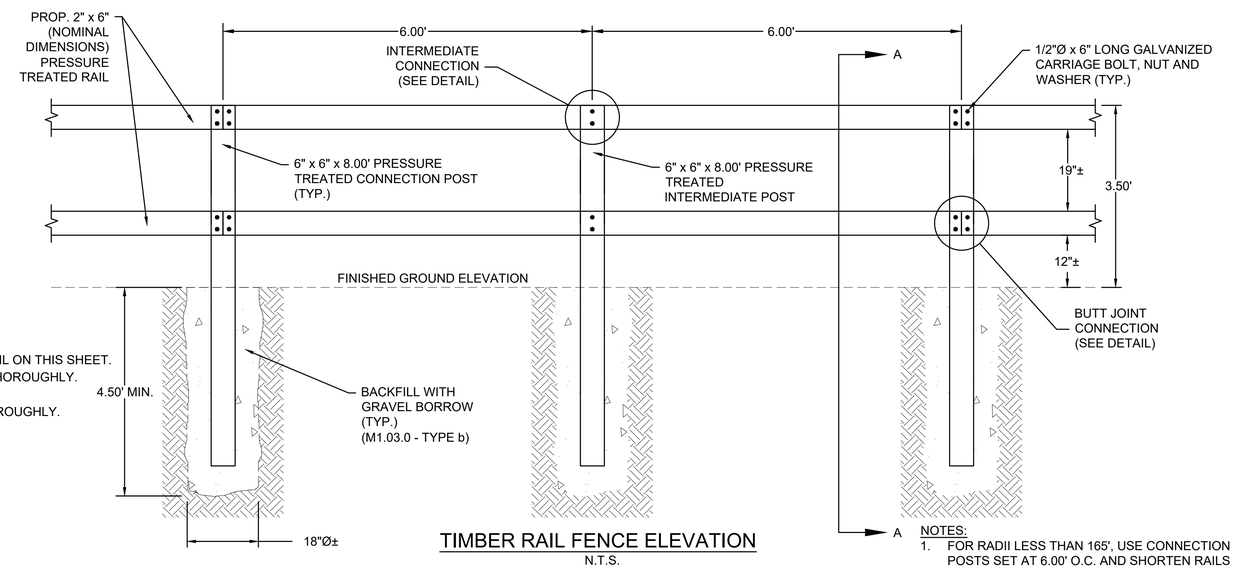

TIMBER RAIL FENCE ELEVATION
N.T.S.
SEE PLANS FOR LOCATIONS

NOTES:

1. FOR RADII LESS THAN 165', USE CONNECTION POSTS SET AT 6.00' O.C. AND SHORTEN RAILS ACCORDINGLY.

SUGGESTED TIMBER RAIL FENCE CONSTRUCTION SEQUENCE

1. AUGER OR DIG POST HOLE TO REQUIRED DIMENSIONS.
2. IF GROUND IS SATURATED, USE TUBE STEEL SLEEVE. SEE DETAIL ON THIS SHEET.
3. BACKFILL BOTTOM 6"± OF HOLE WITH GRAVEL AND COMPACT THOROUGHLY.
4. SET POST AND HOLD PLUMB DURING BACKFILLING.
5. BACKFILL WITH GRAVEL IN 12" LIFTS. COMPACT EACH LIFT THOROUGHLY.
6. CLAMP RAILS TO POSTS AND FIELD DRILL BOLT HOLES.
7. SET BOLTS, WASHERS AND NUTS.

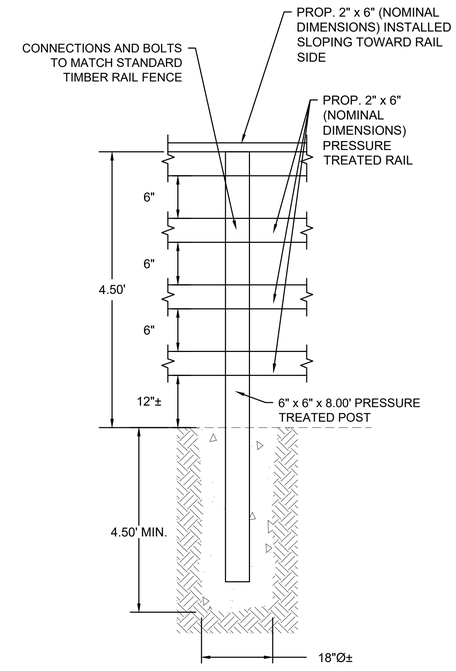

56" TIMBER RAIL FENCE
N.T.S.

606223_HD_(CD).DWG Plotted on 26-Jun-2018 12:11 PM

ACTON & CONCORD
BRUCE FREEMAN RAIL TRAIL PHASE 2B

STATE	FED. AID PROJ. NO.	SHEET NO.	TOTAL SHEETS
MA	-	68	146
PROJECT FILE NO.	606223		

CONSTRUCTION DETAILS

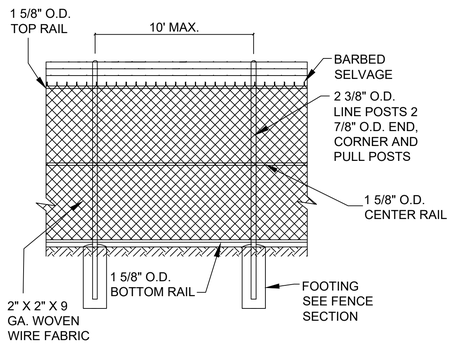

PROP. 12' HEIGHT CHAIN LINK FENCE

NOT TO SCALE

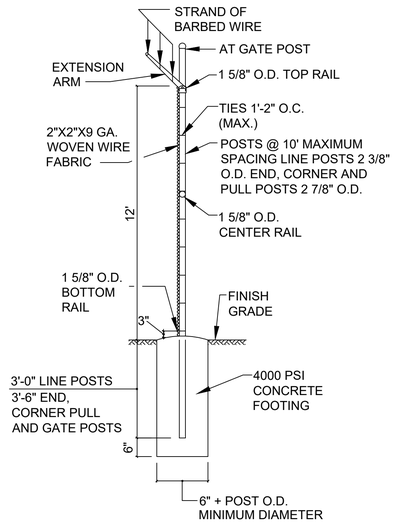

PROP. 12' HEIGHT CHAIN LINK FENCE SECTION

NOT TO SCALE

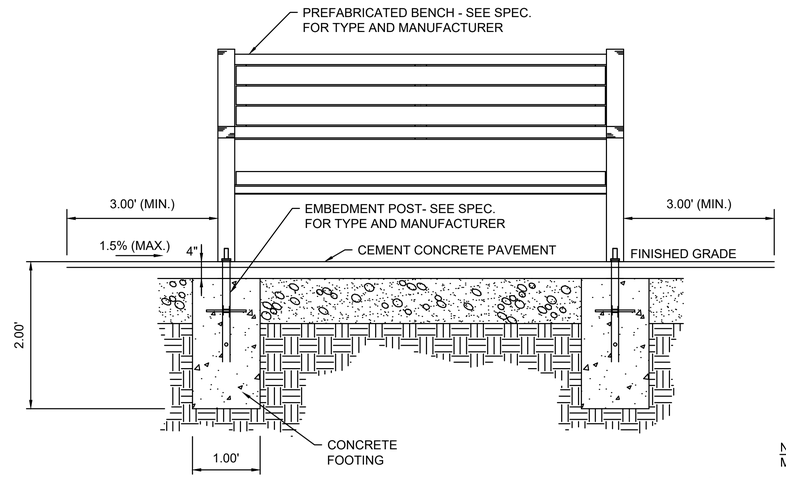

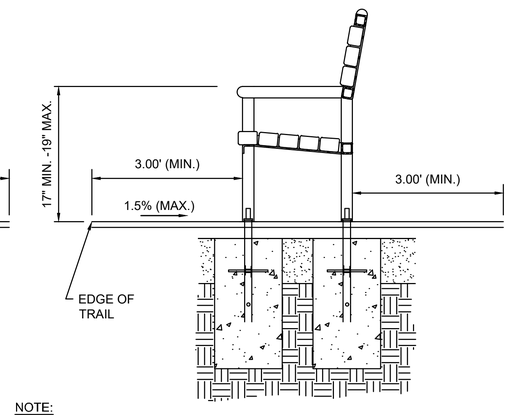

NOTE:
MINIMUM SETBACK OF 3.00' FROM TRAIL SURFACE

PROP. BENCH

N.T.S.

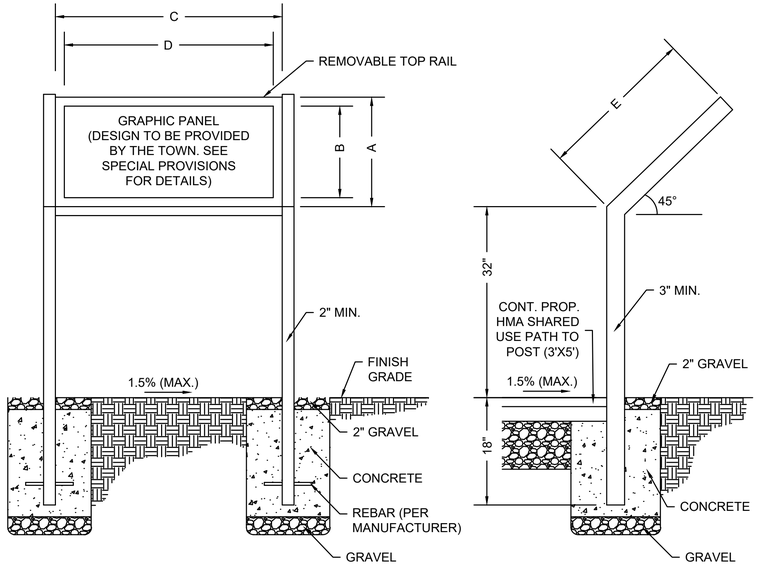

PROP. INTERPRETIVE SIGN

N.T.S.

DIMENSION TABLE					
SIGN TYPE	HEIGHT		WIDTH		DEPTH
	A	B	C	D	E
26" x 38"	26"	23"	38"	35"	26.5"

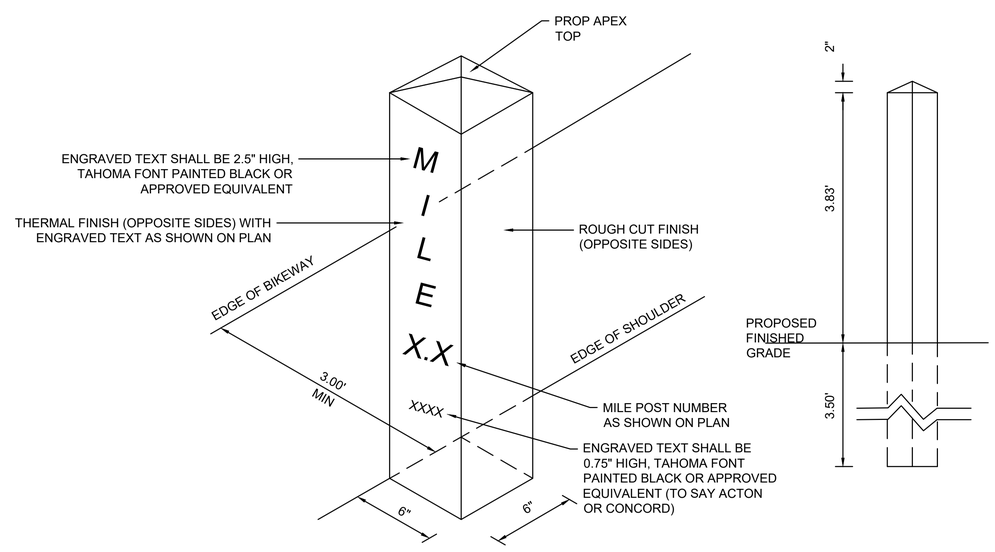

PROP. GRANITE MILE MARKER

N.T.S.

606223_HD_(CD).DWG Plotted on 26-Jun-2018 12:11 PM

606223_HD_(CD).DWG Plotted on 26-Jun-2018 12:11 PM

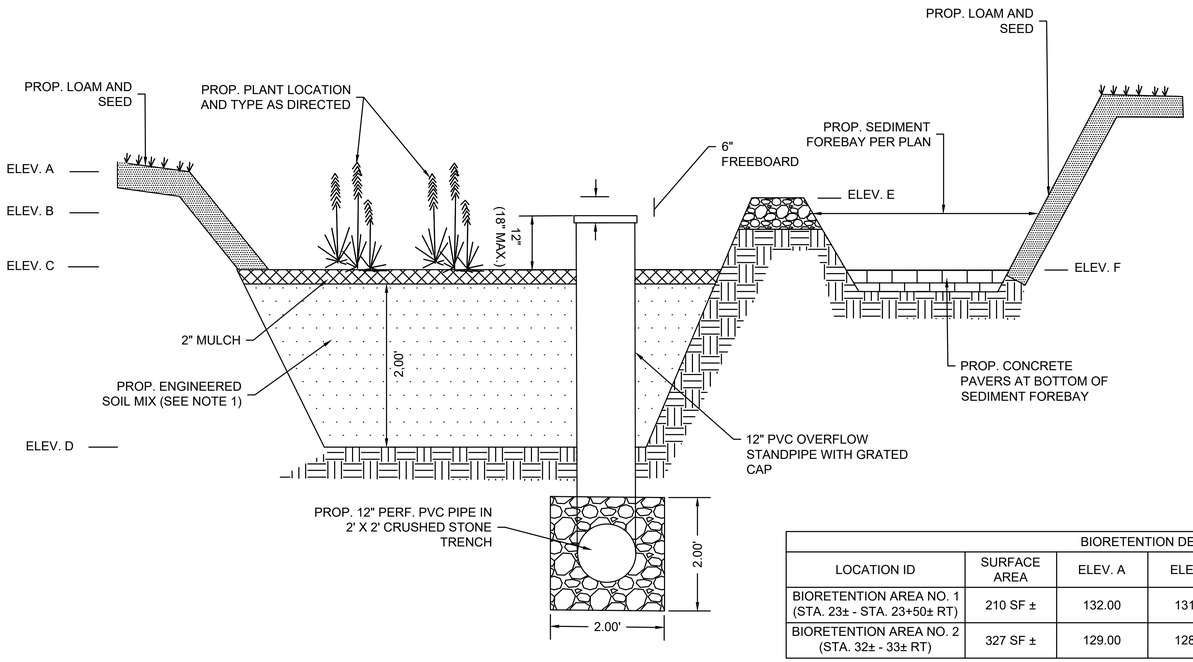

NOTES:

1. THE SOIL MIX FOR BIORETENTION AREAS SHOULD BE A MIX OF SAND, COMPOST, AND SOIL TO MEET THE FOLLOWING SPECIFICATIONS:
   - 40% SAND
   - 20 TO 30% TOPSOIL
   - 30 TO 40% COMPOST
2. CONSTRUCT BIORETENTION AREAS IN ACCORDANCE WITH THE MASSACHUSETTS STORMWATER HANDBOOK (VOL. 2, 2008).
3. SNOW SHOULD NEVER BE STORED IN BIORETENTION AREAS.

BIORETENTION DESIGN ELEVATIONS

LOCATION ID	SURFACE AREA	ELEV. A	ELEV. B	ELEV. C	ELEV. D	ELEV. E	ELEV. F
BIORETENTION AREA NO. 1 (STA. 23± - STA. 23+50± RT)	210 SF ±	132.00	131.20	130.20	128.00	131.70	129.80
BIORETENTION AREA NO. 2 (STA. 32± - 33± RT)	327 SF ±	129.00	128.30	127.30	125.10	128.80	126.00

PROP. BIORETENTION AREA DETAIL

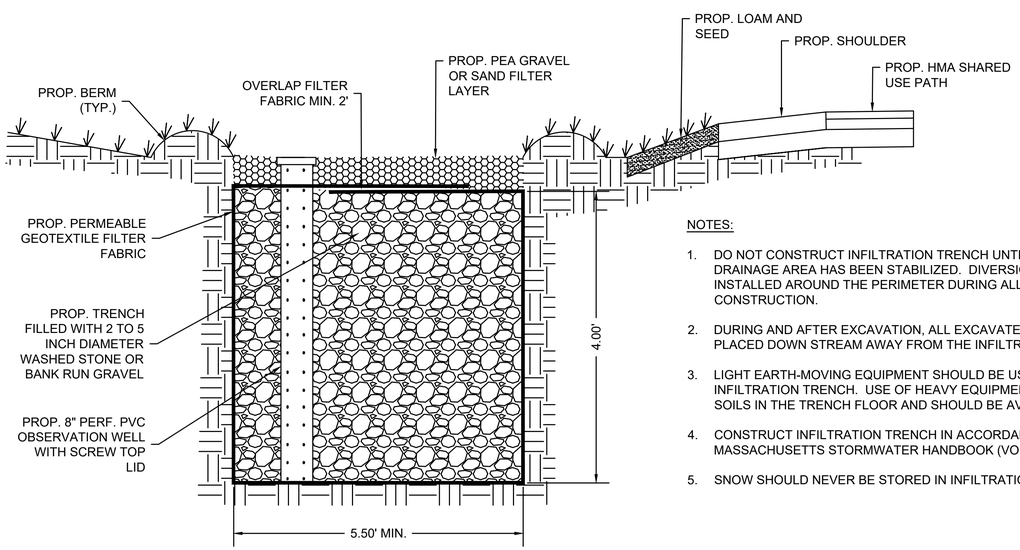

NOTES:

1. DO NOT CONSTRUCT INFILTRATION TRENCH UNTIL THE CONTRIBUTING DRAINAGE AREA HAS BEEN STABILIZED. DIVERSION BERMS SHOULD BE INSTALLED AROUND THE PERIMETER DURING ALL PHASES OF CONSTRUCTION.
2. DURING AND AFTER EXCAVATION, ALL EXCAVATED MATERIALS SHOULD BE PLACED DOWN STREAM AWAY FROM THE INFILTRATION TRENCH.
3. LIGHT EARTH-MOVING EQUIPMENT SHOULD BE USED TO EXCAVATE THE INFILTRATION TRENCH. USE OF HEAVY EQUIPMENT CAUSES COMPACTION OF SOILS IN THE TRENCH FLOOR AND SHOULD BE AVOIDED.
4. CONSTRUCT INFILTRATION TRENCH IN ACCORDANCE WITH THE MASSACHUSETTS STORMWATER HANDBOOK (VOL. 2, 2008).
5. SNOW SHOULD NEVER BE STORED IN INFILTRATION AREA.

PROP. STORMWATER INFILTRATION TRENCH

ACTON & CONCORD
BRUCE FREEMAN RAIL TRAIL PHASE 2B

STATE	FED. AID PROJ. NO.	SHEET NO.	TOTAL SHEETS
MA	-	70	146
PROJECT FILE NO.	606223		

CULVERT DETAILS

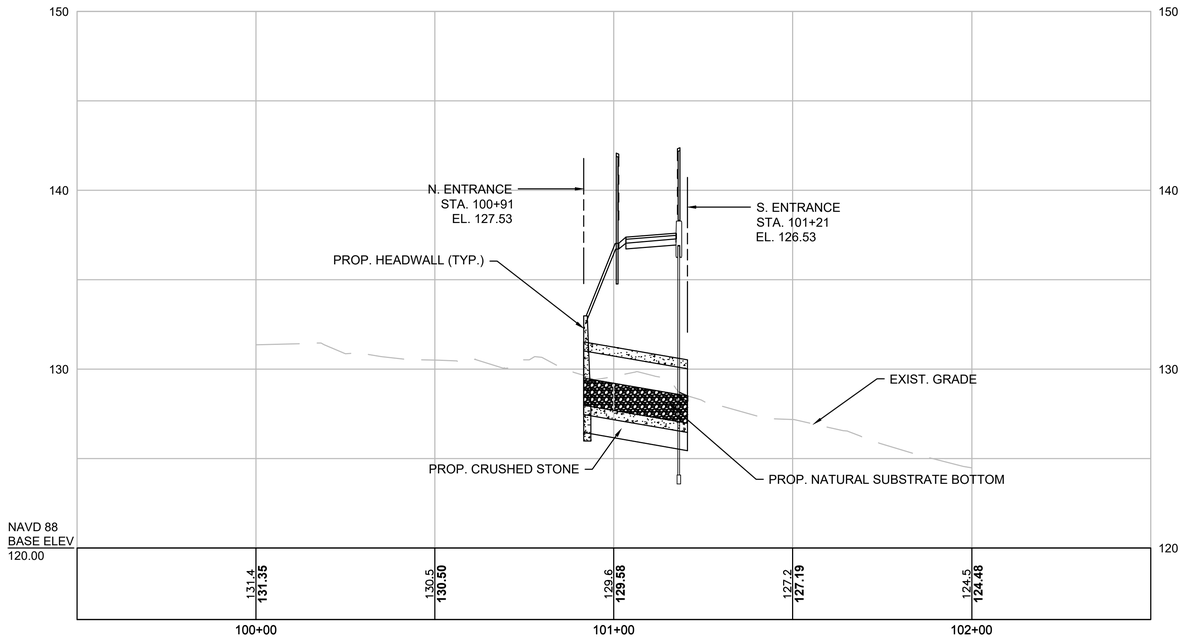

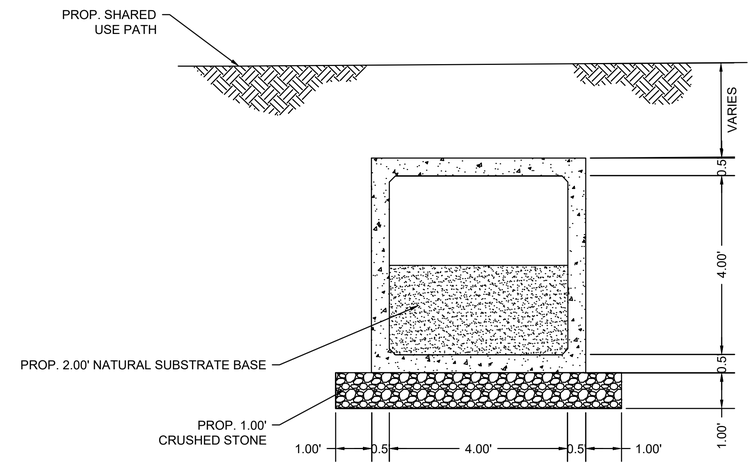

SECTION
NTS

HOR. SCALE IN FEET
20 0 20 40
4 0 4 8
VER. SCALE IN FEET

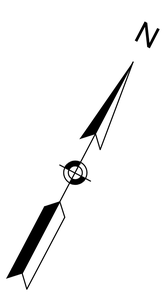

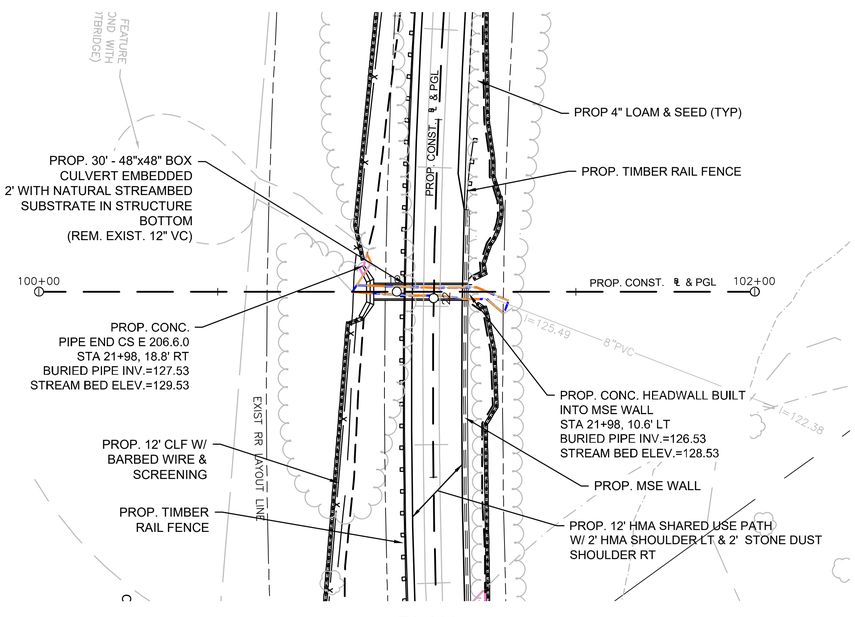

PLAN
SCALE: 1" = 20'

0 20 50 100
SCALE: 1" = 20'

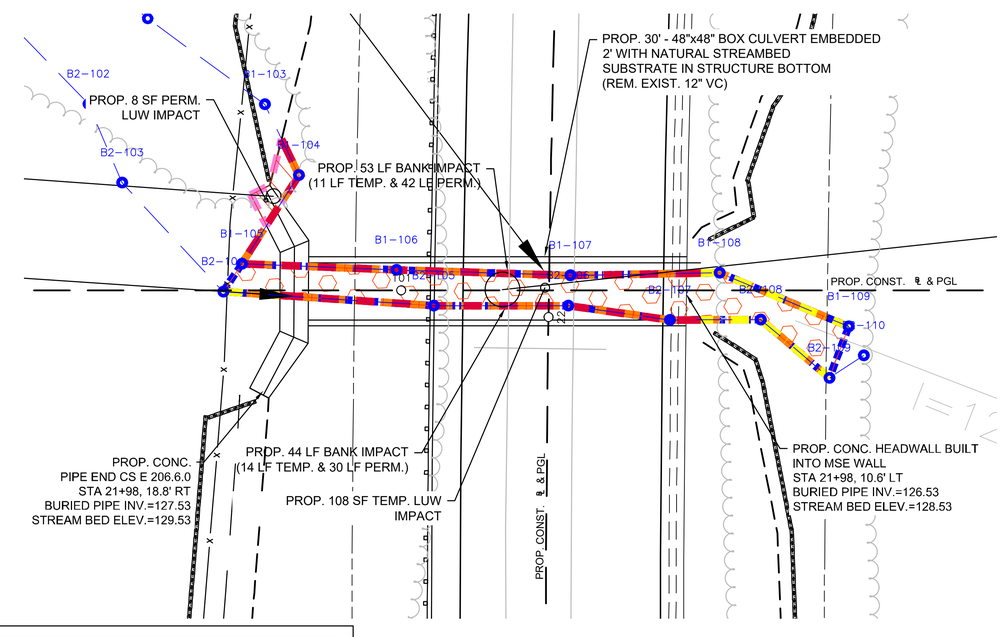

RESOURCE AREA IMPACTS
SCALE: 1" = 5'

RESOURCE AREA LEGEND	
LINE TYPE/HATCH	DESCRIPTION
	LIMIT OF BANK & BORDERING VEGETATED WETLAND(BVW)
	LIMIT OF TEMPORARY BANK IMPACT
	LIMIT OF PERMANENT BANK IMPACT
	TEMPORARY LAND UNDER WATER (LUW) IMPACT
	PERMANENT LAND UNDER WATER (LUW) IMPACT

606223_HD_(CULV).DWG Plotted on 26-Jun-2018 12:12 PM

ACTON & CONCORD
BRUCE FREEMAN RAIL TRAIL PHASE 2B

STATE	FED. AID PROJ. NO.	SHEET NO.	TOTAL SHEETS
MA	–	71	146
PROJECT FILE NO. 606223			

KEY PLAN, LOCUS MAP, PROFILES AND QUANTITIES

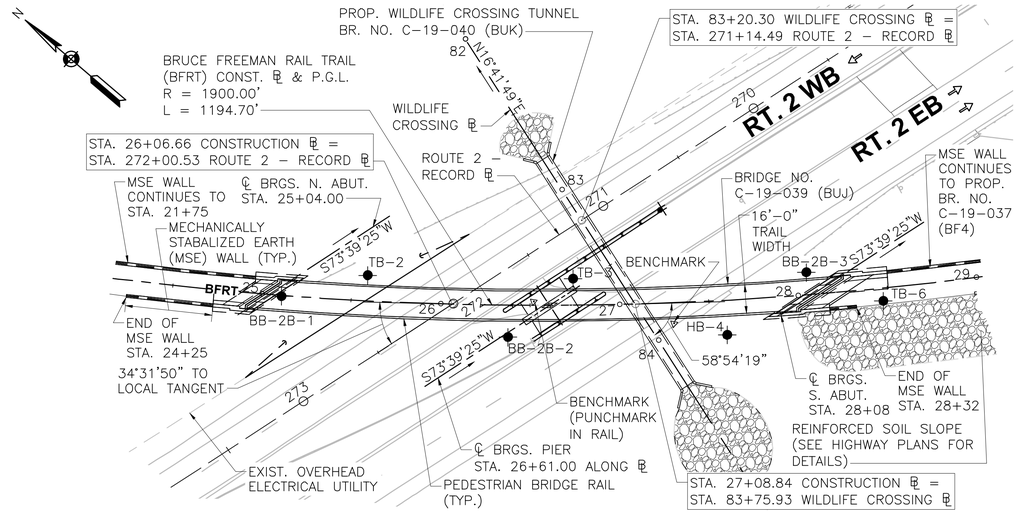

KEY PLAN

SCALES: 1" = 40'

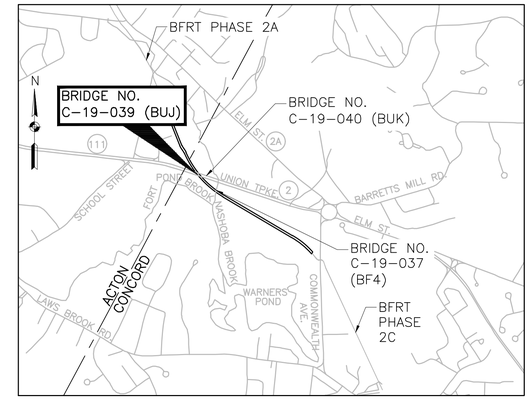

LOCUS

SCALES: 1" = 1500'

INDEX OF BRIDGE SHEETS:

1. KEY PLAN, LOCUS MAP, PROFILES AND QUANTITIES
2. GENERAL NOTES AND ESTIMATED QUNATITIES
3. BORING LOGS (1 OF 3)
4. BORING LOGS (2 OF 3)
5. BORING LOGS (3 OF 3)
6. PLAN AND ELEVATION
7. NORTH ABUTMENT PLAN, ELEVATION, AND SECTION
8. SOUTH ABUTMENT PLAN, ELEVATION, AND SECTION
9. END OF DECK, WINGWALLS, AND FOUNDATION DETAILS
10. CURTAIN WALL PLANS AND DETAILS (1 OF 2)
11. CURTAIN WALL PLANS AND DETAILS (2 OF 2)
12. MSE WALL SECTIONS
13. MSE WALL PLAN AND ELEVATION
14. STRIP SEAL JOINT DETAILS
15. ACUTE CORNER & APPROACH SLAB PLANS AND DETAILS
16. END DIAPHRAGM PLAN, ELEVATION, AND SECTION
17. PIER PLAN, ELEVATION, AND DETAILS
18. FRAMING PLAN AND BEAM ELEVATIONS
19. STRUCTURAL STEEL DETAILS
20. TOF ELEVATIONS AND CAMBER TABLE
21. DECK SECTION AND DETAILS
22. BEARING DETAILS
23. RAILING AND PROTECTIVE SCREEN DETAILS
24. TIMBER RAIL TRANSTION

CURVE DATA – BRUCE FREEMAN RAIL TRAIL (BFRT) CONST. ℄ & P.G.L.

CURVE NO.	BEGIN STATION	END STATION	RADIUS	DELTA	LENGTH	TANGENT
C5	20+75.83	33+33.96	1900.00'	37°56'23"	1258.13'	653.10'

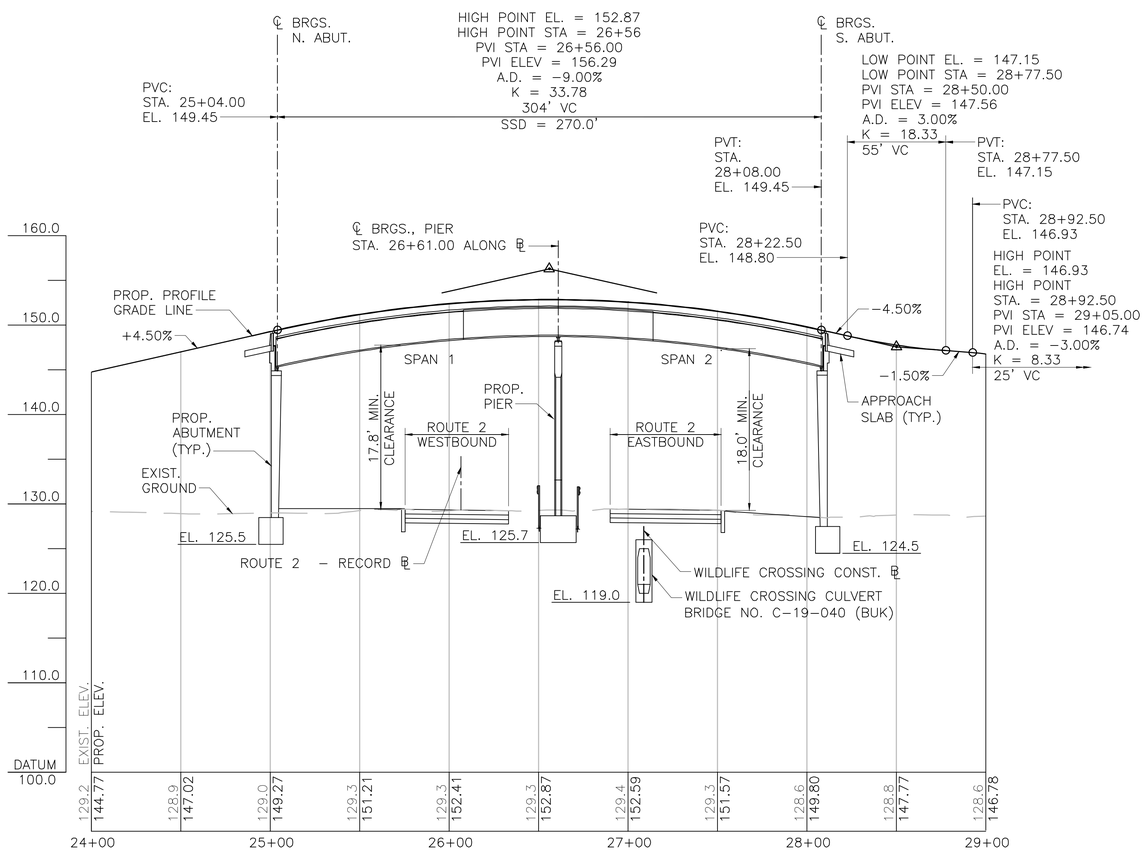

PROFILE – BRUCE FREEMAN RAIL TRAIL CONST. ℄ & P.G.L.

SCALES: HORIZ: 1" = 40'
VERT: 1" = 8'

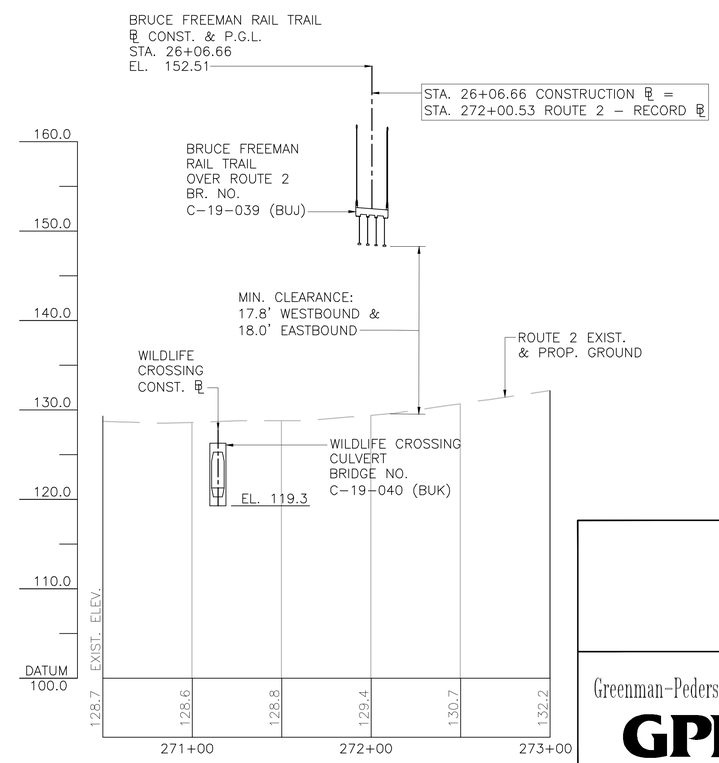

PROFILE – ROUTE 2 RECORD ℄

SCALES: HORIZ: 1" = 40'
VERT: 1" = 8'

MONTH DD, YYYY	ISSUED FOR CONSTRUCTION

massDOT Massachusetts Department of Transportation Highway Division

PROPOSED BRIDGE

CONCORD

BRUCE FREEMAN RAIL TRAIL
OVER MA 2 (UNION TURNPIKE)

MASSACHUSETTS DEPARTMENT OF TRANSPORTATION
HIGHWAY DIVISION
10 PARK PLAZA BOSTON, MASS

Greenman–Pedersen, Inc.
GPI
181 Ballardvale Street, Suite 202
Wilmington, MA 01887

TITLE:

CHIEF ENGINEER

SHEET 1 OF 24 SHEETS BRIDGE NO. C–19–039 (BUJ)

606223_BR(C19039)_01.DWG Plotted on 26-Jun-2018 12:13 PM

First Structural Submittal (S1) 27-June-2018

STATE	FED. AID PROJ. NO.	SHEET NO.	TOTAL SHEETS
MA	–	72	146
PROJECT FILE NO. 606223			

GENERAL NOTES AND
ESTIMATED QUANTITIES

GENERAL NOTES:

DESIGN:
IN ACCORDANCE WITH THE 2014 SPECIFICATIONS OF THE AMERICAN ASSOCIATION OF STATE HIGHWAY AND TRANSPORTATION OFFICIALS WITH CURRENT INTERIM SPECIFICATIONS THROUGH 2016, FOR H10 LOADING. DESIGN ALSO IN ACCORDANCE WITH AASHTO LRFD GUIDE SPECIFICATIONS FOR THE DESIGN OF PEDESTRIAN BRIDGES FOR PEDESTRIAN LOADING.

BENCH MARK:
STA. # CON10 (SMC #40)
PUNCHMARK IN RAIL
N 2996046.040 E 681142.400
BFRT 2B ℄ STA. 26+51.99
2.086' LT ELEV. 128.80

STA. #14 SSM SET
N 2995978.480 E 681184.150
BFRT 2B ℄ STA. 27+30.02
11.647' RT ELEV. 129.13

ELEVATIONS:
ELEVATIONS ARE BASED ON THE NORTH AMERICAN VERTICAL DATUM (NAVD) OF 1988.

MASSDOT SURVEY NOTEBOOKS:
COPIES OF ELECTRONIC SURVEY FILES MAY BE OBTAINED FROM MASSACHUSETTS DEPARTMENT OF TRANSPORTATION – HIGHWAY DESIGN

SCALES:
SCALES NOTED ON THE PLANS ARE NOT APPLICABLE TO REDUCED SIZE PRINTS. DIVIDE SCALES BY 2 FOR HALF-SIZE PRINTS (A3).

FOUNDATIONS:
FOUNDATIONS MAY BE ALTERED, IF NECESSARY, TO SUIT CONDITIONS ENCOUNTERED DURING CONSTRUCTION, WITH THE APPROVAL OF THE ENGINEER.

UNSUITABLE MATERIAL:
ALL UNSUITABLE MATERIAL SHALL BE REMOVED WITHIN THE LIMITS OF THE FOUNDATIONS OF THE STRUCTURE, AS DIRECTED BY THE ENGINEER.

SEISMIC GROUND SHAKING HAZARD:
DESIGN RETURN PERIOD: 1000 YEARS
DESIGN SPECTRA:
As = 0.128
Sds = 0.256
Sd1 = 0.096
SITE CLASS = D
SEISMIC DESIGN CATEGORY (SDC) = A

ANCHOR BOLTS:
ALL ANCHOR BOLTS SHALL BE SET BY TEMPLATE BEFORE THE CONCRETE IS PLACED.

REINFORCEMENT:
REINFORCING STEEL SHALL CONFORM TO THE REQUIREMENTS OF AASHTO M 31 GRADE 60 (EPOXY COATED). UNLESS OTHERWISE NOTED ON THE CONSTRUCTION DRAWINGS, ALL BARS SHALL BE LAPPED AS FOLLOWS:

MODIFICATION CONDITION	#4 BARS	#5 BARS	#6 BARS
1. NONE	21"	26"	31"
2. 12" OF CONCRETE BELOW BAR	29"	36"	43"
3. COATED BARS, COVER < 3DB, OR CLEAR SPACING < 6DB	31"	39"	46"
4. COATED BARS, ALL OTHER CASES	25"	31"	37"
5. CONDITION 2. AND 3.	35"	44"	53"
6. CONDITION 2. AND 4.	34"	43"	51"

IF THE ABOVE BARS ARE SPACED 6" OR MORE ON CENTER, THE LAP LENGTH SHALL BE 80% OF THE LAP LENGTH GIVEN ABOVE. ALL OTHER BARS SHALL BE LAPPED AS SHOWN ON THE CONSTRUCTION DRAWINGS.

CONCRETE MIXES

(1)	(2)	(3)	TO BE USED IN CONSTRUCTION OF:
4000	1½	565	ABUTMENTS, FOOTINGS, APPROACH SLABS, WINGWALLS, CURTAIN WALLS
4000	¾	610	ABUTMENT BACKWALLS, KEEPER BLOCKS
4000	¾	585 HP	DECK, END DIAPHRAGMS, PIER CAP, PIER COLUMN, SAFETY CURBS, WINGWALL CAPS

(1) 28 DAY COMPRESSIVE STRENGTH (PSI)
(2) MAXIMUM AGGREGATE SIZE (IN.)
(3) CEMENTITOUS CONTENT (POUND/C.Y.)

UTILITIES:
THE CONTRACTOR SHALL LOCATE AND PROTECT FROM DAMAGE ALL EXISTING UTILITIES.

ESTIMATED QUANTITIES
(NOT GUARANTEED)

ITEM DESCRIPTION	QUANTITY	UNIT
BRIDGE EXCAVATION	480	CY
GRAVEL BORROW FOR BACKFILLING STRUCTURES & PIPES	520	CY
CRUSHED STONE FOR BRIDGE FOUNDATIONS	30	TON
BRIDGE STRUCTURE, BRIDGE NO. C-19-039 (BUJ)	1	LS
MECHANICALLY STABILIZED EARTH WALL	750	SY
MSE WALL MANUFACTURER'S REPRESENTATIVE	9	DAY

DATE	DESCRIPTION
MONTH DD, YYYY	ISSUED FOR CONSTRUCTION
USE ONLY PRINTS OF LATEST DATE	

606223_BR(C19039)_02.DWG Plotted on 26-Jun-2018 12:14 PM
First Structural Submittal (S1) 27-June-2018

BORING LOGS (1 OF 3)

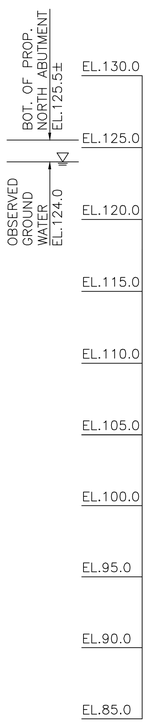

massDOT Highway

NEW HAMPSHIRE BORING, INC.
P.O. Box 165
Derry, NH 03038

Phone: (603)437-1610
Fax: (603) 437-0034
E Mail: nhb@nhboring.com

Boring No. TB-2
Scale 1" = 5'

City/Town: Concord | Trail Borings | Project File No: 602091 | Contract No: 58183
Project: Route 2 Construction at the Concord Rotary | Date & Time Started: 10-01-09 1:00PM | Total Hours: 4.75
Groundwater Depth: 4' | Date & Time: 10-02-09 9:45AM | Date & Time Completed: 10-02-09 9:45AM
Coordinates: N 2996126.0 E 681093.2 | Driller's Name: Peter Labossiere | Helper's Name: Shawn Burto
Ground Elevation: 128.0' | Inspector's Name: Derek Lee | Inspector's Company: Lamson Engineering, Inc. for AECOM

Sample Number	Depth Range (Feet)	Blow Counts per 6" Coring Times Minute Per Foot				Recovery (Inches)	Field Description	Strata Changes
S-1	0' - 2'	3	3	5	14	12"	Dry, loose, brown, COARSE SAND, some fine sand, trace organic silt.	
S-2	4' - 6'	9	10	13	11	12"	Wet, medium dense, brown, COARSE SAND, trace fine sand.	
S-3	9' - 11'	5	6	7	10	10"	Wet, medium dense, brown, COARSE SAND, trace fine sand.	
S-4	14' - 16'	32	21	17	16	6"	Wet, dense, brown, COARSE SAND, some fine sand, trace inorganic silt.	
S-5	19' - 21'	9	6	12	17	12"	Wet, medium dense, brown, COARSE SAND, some fine sand and gravel, trace inorganic silt.	
								23'
S-6	24' - 26'	8	5	6	5	12"	Wet, medium dense, gray, FINE SAND, trace inorganic silt.	
S-7	29' - 31'	25	8	8	13	6"	Wet, medium dense, gray, FINE SAND, some fine gravel, weathered bedrock in wash.	
							Top of Possible BEDROCK at 32'	32'
	34' - 35'	13	4				Rollerbit to 34'. Retrieved 1'6" boulder, advanced to 36' to sample.	
S-8	36' - 36'8"	41	8/2"			8"	Wet, very dense, gray, FINE SAND, some coarse sand and fine gravel, (till). Bottom of Exploration = 36'8"	36'8"

Notes: Sample by cathead

Protective Device - Stand: Box:
Well Depth: Solid Pipe:
Stick Up Pipe: Screen Pipe:
Type of Drill Rig: Mobile B-47
Casing Type:HW Size: 4" Signs:
Hammer Weight:300Lbs. Cones:
Fall:30"
Depth: 33' Arrow-Board:
Sampler Type: S/S Size: 1 3/8"
Automatic Hammer Weight:
Safety Hammer Weight: 140Lbs.
Donut Hammer Weight:
Fall: 30"
Core Barrel Type: Size:

Penetration Resistance (N) Guide:

Cohesionless Soils (Sands, Gravels)		Cohesive Soils (Silts, Clays)	
Relative Density	Penetration Resistance	Consistency	Penetration Resistance
Very Loose	0 - 4	Very Soft	0 - 2
Loose	4 - 10	Soft	2 - 4
Medium Dense	10 - 30	Medium Stiff	4 - 8
Dense	30 - 50	Stiff	8 - 15
Very Dense	Over 50	Very Stiff	15 - 30
N=Sum of Second and Third 6" Blow Counts		Hard	Over 30

Terms Used for Second Entry of Descriptions: and = 40-50%, some = 10-40%, trace = 10% or less

BORING TB–2

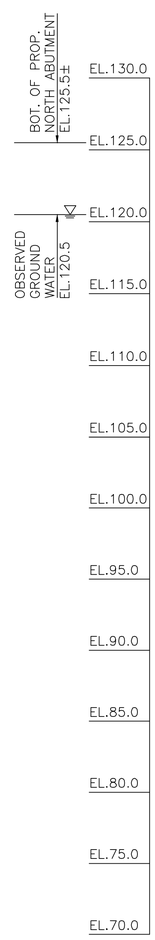

massDOT Highway

NEW HAMPSHIRE BORING, INC.
P.O. Box 165
Derry, NH 03038

Phone: (603)437-1610
Fax: (603) 437-0034
E Mail: nhb@nhboring.com

Boring No. BB-2B-1
Scale 1" = 5'

City/Town: Acton Concord | Bridge: Bruce Freeman Rail Trail (Phase II-B) | Project File No: 606223 | Contract No: 76859
Project: Bruce Freeman Rail Trail Route 2 (Phase II-B) | Date & Time Started: 11-12-14 2:00 pm | Total Hours: 12.5
Groundwater Depth: 9' | Date & Time: 11-13-14 7:25 am | Date & Time Completed: 11-14-14 11:00 am
Coordinates: N 2996155 E 681053 | Driller's Name: Manlea Thompson | Helper's Name: Donald Palmer
Ground Elevation: 129.5 | Inspector's Name: Weijie Dong | Inspector's Company: Lamson Engineering, Corp., for *

Sample Number	Depth Range (Feet)	Blow Counts per 6 Inches Coring Times Minute Per Foot				Recovery Inches	Field Description	Strata Changes
S-1	0' - 2'	2	3	5	3	14"	Dry, loose, brown, FINE TO COARSE SAND, some inorganic silt.	
S-2	5' - 7'	7	9	14	16	13"	Dry, medium dense, brown, FINE SAND, some coarse sand, trace inorganic silt.	
S-3	10' - 12'	8	13	15	16	10"	Wet, medium dense, brown, FINE TO COARSE SAND, some fine to medium gravel, trace inorganic silt.	
								13'6"
S-4	15' - 16'	7	9	11	11	5"	Wet, medium dense, brown-red, FINE SAND and inorganic silt.	16'
S-4A	16' - 17'					4"	Wet, medium dense, gray, FINE SAND, trace inorganic silt.	
S-5	20' - 22'	3	3	5	5	17"	Wet, loose, gray, FINE SAND, some inorganic silt, trace clay.	
								25'
S-6	25' - 26'	2	4	4	4	8"	Wet, loose, brown, FINE SAND, some inorganic silt.	26'
S-6A	26' - 27'					8"	Wet, loose, gray, FINE SAND, some inorganic silt, trace clay.	
								28'6"
S-7	30' - 32'	21	22	24	15	12"	Wet, dense, gray, FINE TO COARSE SAND and fine to medium gravel, trace inorganic silt.	
							Top of possible BEDROCK at 33'	33'
C-1	34' - 39'	4	2	2	3	2	48"	Advanced rollerbit to 34' and began coring. Hard very weathered, moderately fractured GRANITE. Percent Recovery = 80%
C-2	39' - 44'	2	1	1	1	1	0"	No recovery, very weathered GRANITE. Rollerbit to 45', telescoped 3" casing to sample.
S-8	45' - 45'11"	34	86/5"			9"	Moist, very dense, gray, possible weathered BEDROCK.	
S-9	50' - 50'2"	120/2"				2"	Moist, very dense, brown, FINE TO MEDIUM GRAVEL, trace inorganic silt (weathered possible bedrock) Advanced rollerbit to 55'	
							Terminated boring at 55'	55'
							Bottom of Exploration = 55'	

Remarks: * AECOM (Consultants)
Boring terminated due to not being able to advanced corebarrell down the hole.
Boring terminated without coring another 5 foot run to compensate for the no recovery obtained from C-2; enough information was obtained for the design engineer. Installed monitoring well at 20'

Protective Device - Stand: Box:
Well Depth: 20' Solid Pipe: 13'
Stick Up Pipe: 3' Screen Pipe: 10'
Type of Drill Rig: CME 550X
Arrow-Board: Signs: Cones:
Casing: HW Size: 4" Amt: 39'
Casing: NW Size: 3" Amt: 45'
Hammer Weight: 300 lbs. Fall: 30"
Sampler Type: S/S Size: 1 3/8"
Automatic Hammer Weight:
Safety Hammer Weight: 140 lbs.
Donut Hammer Weight: Fall: 30"
Core Barrel Type: NX Size: 2.15"

Penetration Resistance (N) Guide:

Cohesionless Soils (Sands, Gravels)		Cohesive Soils (Silts, Clays)	
Relative Density	Penetration Resistance	Consistency	Penetration Resistance
Very Loose	0 - 4	Very Soft	0 - 2
Loose	4 - 10	Soft	2 - 4
Medium Dense	10 - 30	Medium Stiff	4 - 8
Dense	30 - 50	Stiff	8 - 15
Very Dense	Over 50	Very Stiff	15 - 30
N=Sum of Second and Third 6" Blow Counts		Hard	Over 30

Terms Used for Second Entry of Descriptions: and = 40-50%, some = 10-40%, trace = 10% or less

BORING BB–2B–1

BORING NOTES:

1. LOCATION OF BORINGS SHOWN ON THE PLAN THUS: TB–2
2. BORINGS ARE TAKEN FOR PURPOSE OF DESIGN AND SHOW CONDITIONS AT BORING POINTS ONLY, BUT DO NOT NECESSARILY SHOW THE NATURE OF THE MATERIALS TO BE ENCOUNTERED DURING CONSTRUCTION.
3. WATER LEVELS SHOWN ON THE BORING LOGS WERE OBSERVED AT THE TIME OF TAKING BORINGS AND DO NOT NECESSARILY SHOW THE TRUE GROUND WATER LEVEL.
4. FIGURES IN COLUMNS INDICATE NUMBER OF BLOWS REQUIRED TO DRIVE A 1 3/8" I.D. SPLIT SPOON SAMPLER 6" USING A 140 POUND WEIGHT FALLING 30".
5. BORING SAMPLES ARE STORED AT A STORAGE FACILITY LOCATED ON ROUTE 114 (219 WINTHROP AVE.) IN LAWRENCE, MA. THE CONTRACTOR MAY EXAMINE THE SOIL AND ROCK SAMPLES BY CONTACTING THE MASSDOT GEOTECHNICAL SECTION AT 10 PARK PLAZA, BOSTON, MA.
6. ALL BORINGS WERE MADE IN OCTOBER 2009 AND NOVEMBER 2014.
7. BORINGS WERE MADE BY NEW HAMPSHIRE BORING, INC. LOCATED AT 1215 WEST CHESTNUT STREET, BROCKTON, MA 02301.
8. THE NORTH AMERICAN VERTICAL DATUM (NAVD) OF 1988 IS USED THROUGHOUT.
9. THE DEPTHS AS SHOWN ON THE ORIGINAL BORING LOGS HAVE BEEN CONVERTED TO ELEVATIONS BY THE ENGINEER.

NOTE:

FOR LOCATION OF BORINGS, SEE SHEET 1.

GROUND WATER INFORMATION

BORING NO.	GROUND SURFACE ELEV. (FT.)	GROUND WATER DEPTH (FT.)	EST. GROUND WATER ELEV. (FT.)
TB–2	128.0	4'–0"	124.0
BB–2B–1	129.5	9'–0"	120.5
TB–3	129.0	9'–0"	120.0
BB–2B–2	129.7	8'–0"	121.7
HB–4	128.2	11'–0"	117.2
BB–2B–3	128.5	7'–0"	121.5
TB–6	128.2	10'–0"	118.2

DATE	DESCRIPTION
MONTH DD, YYYY	ISSUED FOR CONSTRUCTION

USE ONLY PRINTS OF LATEST DATE

606223_BR(C19039)_03-05.DWG Plotted on 26-Jun-2018 12:14 PM
First Structural Submittal (S1) 27-June-2018

BORING LOGS (2 OF 3)

massDOT Massachusetts Department of Highways

NEW HAMPSHIRE BORING, INC.
P.O. Box 165
Derry, NH 03038

Phone: (603)437-1610
Fax: (603) 437-0034
E Mail: nhb@nhboring.com

Boring No. TB-3
Scale 1" = 5'

City/Town: Concord | Trail Borings | Project File No: 602091 | Contract No: 58183
Project: Route 2 Construction at the Concord Rotary | Date & Time Started: 10-09-09 7:00AM | Total Hours: 7
Groundwater Depth: 9' | Date & Time: 10-09-09 2:00PM | Date & Time Completed: 10-09-09 2:00PM
Coordinates: N 2996037.7 E 681166.5 | Driller's Name: Peter Labossiere | Helper's Name: Jack Lefebvre
Ground Elevation: 129.0' | Inspector's Name: Derek Lee | Inspector's Company: Lamson Engineering, Inc. for AECOM

BOT. OF PROP. PIER EL.125.7
OBSERVED GROUND WATER EL.120.0

EL.130.0, EL.125.0, EL.120.0, EL.115.0, EL.110.0, EL.105.0, EL.100.0, EL.95.0, EL.90.0, EL.85.0

Sample Number	Depth Range (Feet)	Blow Counts per 6" Coring Times Minute Per Foot	Recovery (Inches)	Field Description	Strata Changes
S-1	0' - 2'	3 4 3 5	16"	Dry, loose, brown, COARSE SAND ANDFINE SAND, trace organic silt.	
S-2	4' - 6'	14 9 7 7	12"	Wet, medium dense, brown, COARSE SAND, some fine sand, trace inorganic silt.	
S-3	9' - 11'	7 5 6 6	8"	Wet, medium dense, brown, COARSE SAND, some fine sand, trace inorganic, silt.	13'
S-4	14' - 16'	7 7 12 13	12"	Wet, medium dense, grey, COARSE SAND, some fine gravel, trace fine sand.	
S-5	19' - 21'	13 19 8 11	6"	Wet, medium dense, grey, COARSE SAND, some fine gravel, trace fine sand.	
S-6	24' - 26'	16 13 12 6	7"	Wet, medium dense, brown, COARSE SAND, some fine sand, trace inorganic silt.	
S-7	29' - 31'	4 3 3 5	12"	Wet, loose, gray, FINE SAND, some inorganic silt.	33'
S-8	34' - 36'	14 13 15 15	10"	Wet, medium dense, brown, COARSE SAND, some fine sand, trace inorganic silt.	37'
S-9	39' - 40'	70 67	10"	Wet, very dense, gray, FINE SAND AND COARSE SAND, some inorganic silt, (till).	
S-10	44' - 44'6"	120/6"	6"	Wet, very dense, gray, FINE SAND, some inorganic silt, trace coarse sand, (till).	49'
S-11	49' - 49'8"	51 70/2"	8"	Wet, very dense, gray, COARSE SAND, some fine sand, trace inorganic silt, trace bedrock pieces in tip of spoon. Top of BEDROCK at 50'	50'
				Began coring at 50'.	
C-1	50' - 55'	3 4 4 3 4	39"	Medium hard, highly weathered, highly fractured, gray/brown, SCHIST. Pecent Recovery = 78%	
C-2	55' - 60'	3 3 2 3 3	29"	Medium hard, highly weathered, highly fractured, gray/brown, SCHIST. Percent Recovery = 48%	60'
				Bottom of Exploration = 60'	

Notes: Sample by cathead

Protective Device - Stand: Box:
Well Depth: Solid Pipe:
Stick Up Pipe: Screen Pipe:

Penetration Resistance (N) Guide:

Cohesionless Soils (Sands, Gravels)		Cohesive Soils (Silts, Clays)	
Relative Density	Penetration Resistance	Consistency	Penetration Resistance
Very Loose	0 - 4	Very Soft	0 - 2
Loose	4 - 10	Soft	2 - 4
Medium Dense	10 - 30	Medium Stiff	4 - 8
Dense	30 - 50	Stiff	8 - 15
Very Dense	Over 50	Very Stiff	15 - 30
N=Sum of Second and Third 6" Blow Counts		Hard	Over 30

Terms Used for Second Entry of Descriptions: and = 40-50%, some = 10-40%, trace = 10% or less

Type of Drill Rig: Mobile B-47
Casing Type: HW Size: 4" Hammer Weight: 300Lbs. Fall: 30" Depth: 45'
Signs: Cones: 6 Arrow-Board:
Sampler Type: S/S Size: 1 3/8" Automatic Hammer Weight: Safety Hammer Weight: 140Lbs. Donut Hammer Weight: Fall: 30"
Core Barrel Type: NX Size: 2.15"

BORING TB–3

massDOT Massachusetts Department of Highways

NEW HAMPSHIRE BORING, INC.
P.O. Box 165
Derry, NH 03038

Phone: (603)437-1610
Fax: (603) 437-0034
E Mail: nhb@nhboring.com

Boring No. BB-2B-2
Scale 1" = 5'

City/Town: Acton Concord | Bridge: Bruce Freeman Rail Trail (Phase II-B) | Project File No: 606223 | Contract No: 76859
Project: Bruce Freeman Rail Trail Route 2 (Phase II-B) | Date & Time Started: 11-25-14 7:30 am | Total Hours: 7
Groundwater Depth: 8' | Date & Time: 11-25-14 2:15 am | Date & Time Completed: 11-25-14 2:30 pm
Coordinates: N 2996044 E 681118 | Driller's Name: Manlea Thompson | Helper's Name: Donald Palmer
Ground Elevation: 129.7 | Inspector's Name: Weijie Dong | Inspector's Company: Lamson Engineering, Corp. for *

BOT. OF PROP. PIER EL.125.7
OBSERVED GROUND WATER EL.121.7

EL.130.0, EL.125.0, EL.120.0, EL.115.0, EL.110.0, EL.105.0, EL.100.0, EL.95.0, EL.90.0, EL.85.0, EL.80.0, EL.75.0, EL.70.0, EL.65.0, EL.60.0

Sample Number	Depth Range (Feet)	Blow Counts per 6 Inches Coring Times Minute Per Foot	Recovery Inches	Field Description	Strata Changes
				TOPSOIL 3"	
S-1	0' - 2'	2 5 6 6	10"	Dry, medium dense, brown, FINE TO COARSE SAND, trace fine to medium gravel, trace inorganic silt.	
S-2	5' - 7'	3 3 5 7	8"	Moist, loose, brown FINE TO COARSE SAND, trace fine gravel, trace inorganic silt.	
S-3	10' - 12'	5 7 6 7	14"	Wet, medium dense, brown, FINE TO COARSE SAND, trace fine gravel, trace inorganic silt.	
S-4	15' - 17'	7 10 9 10	11"	Wet, medium dense, gray, FINE TO COARSE SAND, trace fine to medium gravel, trace inorganic silt.	19'
S-5	20' - 22'	9 11 13 16	15"	Wet, medium dense, brown, FINE TO COARSE SAND and fine to medium gravel, some inorganic silt.	23'
S-6	25' - 26'	5 6 5 5	7"	Wet, medium dense, brown, FINE SAND and inorganic silt.	26'
S-6A	26' - 27'		7"	Wet, loose, gray, FINE SAND and inorganic silt.	30'
S-7	30' - 32'	10 10 16 19	6"	Wet, medium dense, gray, COARSE TO FINE SAND and fine to medium gravel, trace inorganic silt.	32'6"
S-8	35' - 36'4"	42 55 65/4"	16"	Wet, very dense, gray, FINE TO COARSE SAND, some fine to medium gravel, some inorganic silt (Till.)	
S-9	40' - 41'3"	37 67 53/3"	12"	Wet, very dense, gray, FINE TO COARSE SAND, some fine to medium gravel, some inorganic silt (Till.)	
S-10	45' - 46'4"	28 40 80/4"	15"	Wet, very dense, gray, FINE TO COARSE SAND, some fine to medium gravel, some inorganic silt (Till.)	46'4"
S-11	50' - 50'2"	120/2"	0"	No Recovery	
S-12	55' - 55'8"	86 34/2"	4"	Wet, very dense, brown-white INORGANIC SILT and fine sand, some fine gravel, trace weathered bedrock.	
S-13	60' - 60'3"	120/3"	2"	Wet, very dense, brown-gray, weathered BEDROCK.	
S-14	65' - 65'4"	120/4"	3"	Wet, very dense, brown-gray weathered BEDROCK.	65'4"
				Bottom of Exploration = 65'4"	

Remarks: * AECOM (Consultants)

Protective Device - Stand: Box:
Well Depth: Solid Pipe:
Stick Up Pipe: Screen Pipe:

Penetration Resistance (N) Guide:

Cohesionless Soils (Sands, Gravels)		Cohesive Soils (Silts, Clays)	
Relative Density	Penetration Resistance	Consistency	Penetration Resistance
Very Loose	0 - 4	Very Soft	0 - 2
Loose	4 - 10	Soft	2 - 4
Medium Dense	10 - 30	Medium Stiff	4 - 8
Dense	30 - 50	Stiff	8 - 15
Very Dense	Over 50	Very Stiff	15 - 30
N=Sum of Second and Third 6" Blow Counts		Hard	Over 30

Terms Used for Second Entry of Descriptions: and = 40-50%, some = 10-40%, trace = 10% or less

Type of Drill Rig: CME 550X
Arrow-Board: Signs: 2 Cones: 20
Casing: HW Size: 4" Amt: 65'
Hammer Weight: 300 lbs. Fall: 30"
Sampler Type: S/S Size: 1 3/8" Automatic Hammer Weight: Safety Hammer Weight: 140 lbs. Donut Hammer Weight: Fall: 30"
Core Barrel Type: Size:

BORING BB–2B–2

NOTES:

1. FOR LOCATION OF BORINGS, SEE SHEET 1.
2. FOR BORING NOTES, SEE SHEET 3.

MONTH DD, YYYY	ISSUED FOR CONSTRUCTION
DATE	DESCRIPTION
USE ONLY PRINTS OF LATEST DATE	

606223_BR(C19039)_03-05.DWG Plotted on 26-Jun-2018 12:14 PM
First Structural Submittal (S1) 27-June-2018

BORING LOGS (3 OF 3)

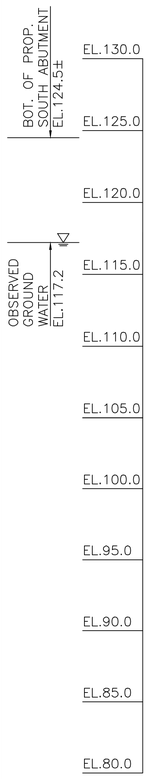

massDOT Highway

NEW HAMPSHIRE BORING, INC.
P.O. Box 165
Derry, NH 03038

Phone: (603)437-1610
Fax: (603) 437-0034
E Mail: nhb@nhboring.com

Boring # HB-4
Scale 1" = 5'

City/Town: Concord | Highway Borings | Project File No: 602091 | Contract No: 58183
Project: Route 2 Construction at the Concord Rotary | Date & Time Started: 10-02-09 1:15PM | Total Hours:
Groundwater Depth: 11' | Date & Time: 10-05-09 10:30AM | Date & Time Completed: 10-05-09 10:30AM | 5.25
Coordinates: N 2995951.8 E 681198.7 | Driller's Name: Roger Burne | Helper's Name: Patrick Schofield
Ground Elevation: 128.2' | Inspector's Name: Christopher Cheu | Inspector's Company: Lamson Engineering, Inc. for AECOM

Sample Number	Depth Range (Feet)	Blow Counts per 6 Inches Coring Times Minute Per Foot				Recovery Inches	Field Description	Strata Changes
							TOPSOIL * 2"	
S-1	0' - 2'	4	3	4	5	5"	Dry, loose, brown, FINE TO COARSE SAND, trace fine to medium gravel, trace inorganic silt.	
S-2	4' - 6'	5	5	9	9	12"	Moist, medium dense, light brown, FINE TO COARSE SAND, some inorganic silt.	
S-3	9' - 11'	5	5	5	5	18"	Wet, medium dense, brown, FINE TO COARSE SAND, trace fine to medium gravel, trace inorganic silt.	14'
S-4	14' - 16'	7	9	10	11	15"	Wet, medium dense, grey, FINE TO COARSE SAND AND FINE TO COARSE GRAVEL, trace inorganic silt.	
S-5	19' - 21'	9	11	13	12	18"	Wet, medium dense, brown/ grey, FINE TO COARSE SAND, some fine to coarse gravel, trace inorganic silt.	24'
S-6	24' - 26'	19	15	9	10	15"	Wet, medium dense, grey, FINE SAND, some inorganic silt, trace clay lenses.	28'6"
S-7	29' - 31'	29	22	23	27	12"	Wet, dense, brown/ grey, FINE TO COARSE SAND, some fine to coarse gravel, trace inorganic silt.	
S-8	34' - 34'9"	44	120/3"			9"	Wet, very dense, brown/ grey, FINE TO COARSE SAND, some fine to coarse gravel, trace inorganic silt.	34'9"
							Encountered BOULDER 34'9" to 35'. * 35'	
							Advanced Rollerbit to 38'.	
							Top of BEDROCK at 38'.	38'
C-1	38' - 43'	4	5	3	4	5	27"	Began coring. Severely fractured, white/ black, GRANITE, trace quartz lenses. Percent Recovery= 45%	
							Bottom of Exploration= 43'	43'

Notes: Stopped coring at 5' per order of on-site engineer due to having obtained sufficient information. Well installed at 15'. 4 bags sand/ 1 cement. Sample by cathead.

Protective Device - Stand: Box:
Well Depth: 15' Solid Pipe: 8'
Stick Up Pipe: 3' Screen Pipe: 10'

Penetration Resistance (N) Guide:

Cohesionless Soils (Sands, Gravels)		Cohesive Soils (Silts, Clays)	
Relative Density	Penetration Resistance	Consistency	Penetration Resistance
Very Loose	0 - 4	Very Soft	0 - 2
Loose	4 - 10	Soft	2 - 4
Medium Dense	10 - 30	Medium Stiff	4 - 8
Dense	30 - 50	Stiff	8 - 15
Very Dense	Over 50	Very Stiff	15 - 30
N=Sum of Second and Third 6" Blow Counts		Hard	Over 30

Terms Used for Second Entry of Descriptions: and = 40-50%, some = 10-40%, trace = 10% or less

Type of Drill Rig: Diedrich- 50
Casing Type:HW Size: 4" Hammer Weight: 300Lbs. Fall: 30" Depth: 34' Signs: Cones: 7 Arrow-Board:
Sampler Type: S/S Size: 1 3/8" Automatic Hammer Weight: Safety Hammer Weight: 140Lbs. Donut Hammer Weight: Fall: 30"
Core Barrel Type: NX Size: 2.15"

BORING HB–4

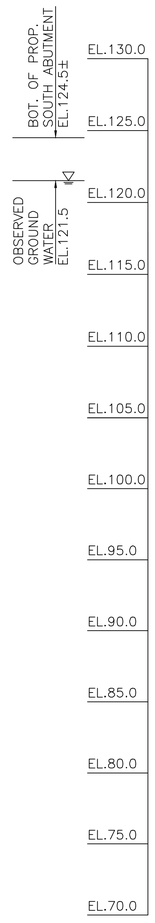

massDOT Highway

NEW HAMPSHIRE BORING, INC.
P.O. Box 165
Derry, NH 03038

Phone: (603)437-1610
Fax: (603) 437-0034
E Mail: nhb@nhboring.com

Boring No. BB-2B-3
Scale 1" = 5'

City/Town: Acton Concord | Bridge: Bruce Freeman Rail Trail (Phase II-B) | Project File No: 606223 | Contract No: 76859
Project: Bruce Freeman Rail Trail Route 2 (Phase II-B) | Date & Time Started: 11-17-14 8:00 am | Total Hours: 10.5
Groundwater Depth: 7' | Date & Time: 11-18-14 11:00 am | Date & Time Completed: 11-18-14 12:00 pm
Coordinates: N 2995941 E 681254 | Driller's Name: Manlea Thompson | Helper's Name: Donald Palmer
Ground Elevation: 128.5 | Inspector's Name: Weijie Dong | Inspector's Company: Lamson Engineering, Corp., for *

Sample Number	Depth Range (Feet)	Blow Counts per 6 Inches Coring Times Minute Per Foot				Recovery Inches	Field Description	Strata Changes
S-1	0' - 2'	3	3	3	2	12"	Moist, loose, black, FINE TO COARSE SAND, some inorganic silt, trace fine to medium gravel.	3'6"
S-2	5' - 7'	4	6	6	8	17"	Moist, medium dense, brown COARSE TO FINE SAND, trace inorganic silt.	
S-3	10' - 12'	5	6	8	8	19"	Wet, medium dense, brown, COARSE TO FINE SAND, trace fine gravel, trace inorganic silt.	
S-4	15' - 17'	8	9	12	13	17"	Wet, medium dense, brown FINE TO COARSE SAND, trace fine gravel, trace inorganic silt.	
S-5	20' - 22'	12	10	9	10	10"	Wet, medium dense, gray FINE TO COARSE SAND, some fine to medium gravel, trace inorganic silt.	
S-6	25' - 27'	6	8	10	12	4"	Wet, medium dense, gray-brown, FINE TO COARSE SAND and fine to medium gravel, trace inorganic silt.	
S-7	30' - 32'	10	9	10	10	13"	Wet, medium dense, gray, FINE TO COARSE SAND, some inorganic silt, trace fine gravel.	
							Top of weathered BEDROCK at 33'	33'
							Advanced casing and roller bit through weathered bedrock to 35'.	
S-8	35' - 35'3"	120/3"				2"	Moist, very dense, gray FINE TO COARSE SAND and fine to coarse gravel, trace inorganic silt (weathered bedrock). Roller bit through weathered bedrock and began coring.	
C-1	38' - 43'	5	5	4	4	5	60"	Hard, fresh, sound, gray GRANITE. Percent Recovery = 100%	
C-2	43' - 48'	4	5	5	4	5	60"	Hard, fresh, sound, gray GRANITE. Percent Recovery = 100%	
								48'
							Bottom of Exploration = 48'	

Remarks: * AECOM (Consultants)
Set monitoring well at 17'

Protective Device - Stand: Box:
Well Depth: 17' Solid Pipe: 10'
Stick Up Pipe: 3' Screen Pipe: 10'

Penetration Resistance (N) Guide:

Cohesionless Soils (Sands, Gravels)		Cohesive Soils (Silts, Clays)	
Relative Density	Penetration Resistance	Consistency	Penetration Resistance
Very Loose	0 - 4	Very Soft	0 - 2
Loose	4 - 10	Soft	2 - 4
Medium Dense	10 - 30	Medium Stiff	4 - 8
Dense	30 - 50	Stiff	8 - 15
Very Dense	Over 50	Very Stiff	15 - 30
N=Sum of Second and Third 6" Blow Counts		Hard	Over 30

Terms Used for Second Entry of Descriptions: and = 40-50%, some = 10-40%, trace = 10% or less

Type of Drill Rig: CME 550X
Arrow-Board: Signs: Cones:
Casing: PW Size: 5" Amt: 34'
Hammer Weight: 300 lbs. Fall: 30"
Sampler Type: S/S Size: 1 3/8" Automatic Hammer Weight: Safety Hammer Weight: 140 lbs. Donut Hammer Weight: Fall: 30"
Core Barrel Type: NX Size: 2.15"

BORING BB–2B–3

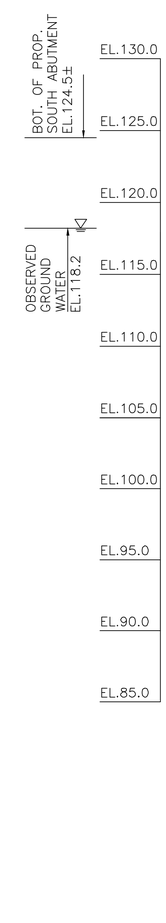

massDOT Highway

NEW HAMPSHIRE BORING, INC.
P.O. Box 165
Derry, NH 03038

Phone: (603)437-1610
Fax: (603) 437-0034
E Mail: nhb@nhboring.com

Boring No. TB-6
Scale 1" = 5'

City/Town: Concord | Trail Borings | Project File No: 602091 | Contract No: 58183
Project: Route 2 Construction at the Concord Rotary | Date & Time Started: 10-05-09 11:25AM | Total Hours: 4
Groundwater Depth: 10' | Date & Time: 10-06-09 7:00AM | Date & Time Completed: 10-06-09 7:30AM
Coordinates: N 2995897.9 E 681269.9 | Driller's Name: Peter Labossiere | Helper's Name: Jack Lefebvre
Ground Elevation: 128.2' | Inspector's Name: Derek Lee | Inspector's Company: Lamson Engineering, Inc. for AECOM

Sample Number	Depth Range (Feet)	Blow Counts per 6" Coring Times Minute Per Foot				Recovery (Inches)	Field Description	Strata Changes
S-1	0' - 2'	4	6	7	7	6"	Dry, medium dense, brown, COARSE SAND AND FINE SAND, some fine gravel, trace organic silt.	4'
S-2	4' - 6'	4	2	2	4	16"	Dry, very loose, brown, FINE SAND, some coarse sand, trace inorganic silt.	9'
S-3	9' - 11'	12	12	11	9	10"	Wet, medium dense, brown, COARSE SAND, some fine sand, trace inorganic silt.	
S-4	14' - 16'	13	9	9	11	10"	Wet, medium dense, brown, COARSE SAND, some fine sand, trace inorganic silt.	
S-5	19' - 21'	7	13	8	13	8"	Wet, medium dense, grey, COARSE SAND, some fine sand, trace inorganic silt.	24'
S-6	24' - 26'	17	11	7	5	12"	Wet, medium dense, grey, COARSE SAND AND FINE SAND, some inorganic silt.	
S-7	29' - 31'	18	8	21	100	8"	Wet, medium dense, grey, COARSE SAND AND FINE SAND, some fine gravel, trace inorganic silt.	
							Top of BEDROCK at 32'.	32'
							Began coring.	
C-1	32' - 37'	4	5	14	5	6	54"	Grey, moderately weathered, SCHIST INTO GREY GRANITE. Percent Recovery= 90%	
								37'
							Bottom of Exploration = 37'	

Notes: Sample by cathead

Protective Device - Stand: Box:
Well Depth: Solid Pipe:
Stick Up Pipe: Screen Pipe:

Penetration Resistance (N) Guide:

Cohesionless Soils (Sands, Gravels)		Cohesive Soils (Silts, Clays)	
Relative Density	Penetration Resistance	Consistency	Penetration Resistance
Very Loose	0 - 4	Very Soft	0 - 2
Loose	4 - 10	Soft	2 - 4
Medium Dense	10 - 30	Medium Stiff	4 - 8
Dense	30 - 50	Stiff	8 - 15
Very Dense	Over 50	Very Stiff	15 - 30
N=Sum of Second and Third 6" Blow Counts		Hard	Over 30

Terms Used for Second Entry of Descriptions: and = 40-50%, some = 10-40%, trace = 10% or less

Type of Drill Rig: Mobile B-47
Casing Type: HW Size: 4" Hammer Weight: 300Lbs. Fall: 30" Depth: 30' Signs: Cones: Arrow-Board:
Sampler Type: S/S Size: 1 3/8" Automatic Hammer Weight: Safety Hammer Weight: 140Lbs. Donut Hammer Weight: Fall: 30"
Core Barrel Type: NX Size: 2.15"

BORING TB–6

NOTES:

1. FOR LOCATION OF BORINGS, SEE SHEET 1.
2. FOR BORING NOTES, SEE SHEET 3.

MONTH DD, YYYY	ISSUED FOR CONSTRUCTION
DATE	DESCRIPTION
USE ONLY PRINTS OF LATEST DATE	

606223_BR(C19039)_03-05.DWG Plotted on 26-Jun-2018 12:14 PM
First Structural Submittal (S1) 27-June-2018

ACTON & CONCORD
BRUCE FREEMAN RAIL TRAIL PHASE 2B

STATE	FED. AID PROJ. NO.	SHEET NO.	TOTAL SHEETS
MA	–	76	146
PROJECT FILE NO. 606223			

PLAN AND ELEVATION

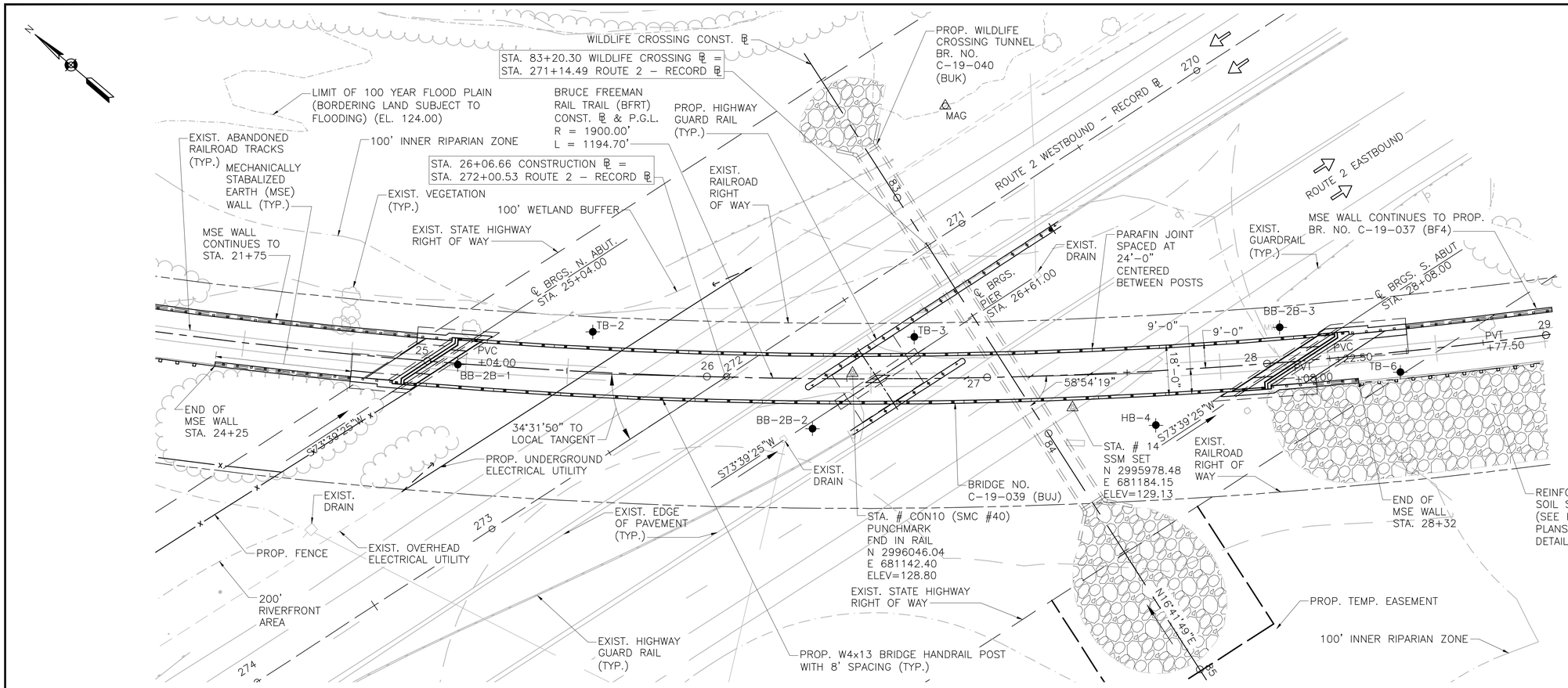

PLAN

SCALES: 1" = 20'

BRIDGE SKEWS ALONG ℄

LOCATION:	SKEW ANGLE:
NORTH ABUTMENT	52°22'26"
PIER	57°6'30"
SOUTH ABUTMENT	61°32'28"

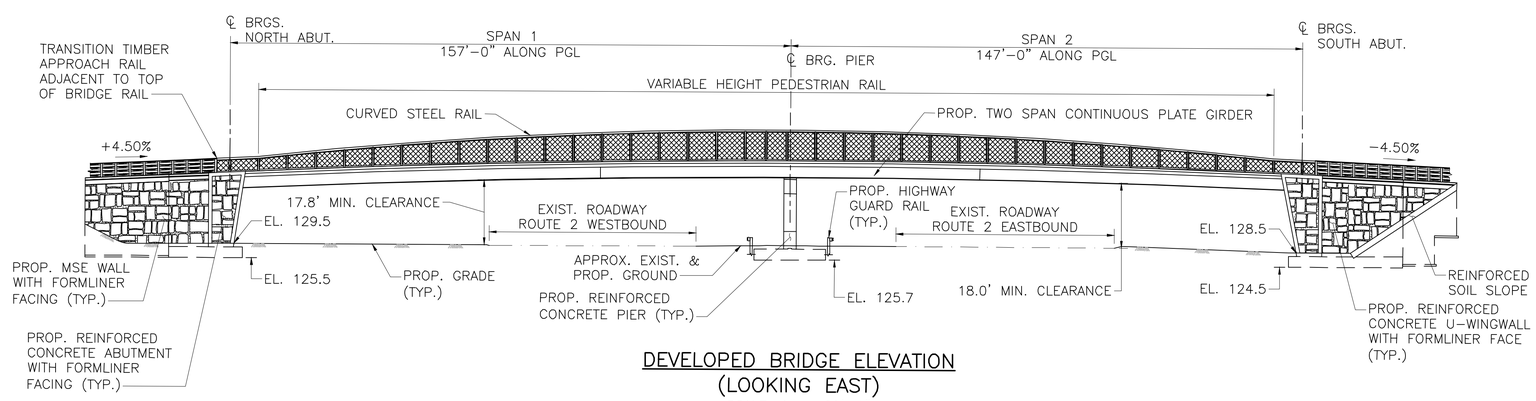

DEVELOPED BRIDGE ELEVATION
(LOOKING EAST)

SCALE: 1" = 20'–0"

MONTH DD, YYYY	ISSUED FOR CONSTRUCTION
DATE	DESCRIPTION
USE ONLY PRINTS OF LATEST DATE	

606223_BR(C19039)_06.DWG Plotted on 26-Jun-2018 12:16 PM
First Structural Submittal (S1) 27-June-2018

ACTON & CONCORD
BRUCE FREEMAN RAIL TRAIL PHASE 2B

STATE	FED. AID PROJ. NO.	SHEET NO.	TOTAL SHEETS
MA	–	77	146
PROJECT FILE NO. 606223			

NORTH ABUTMENT PLAN, ELEVATION, AND SECTION

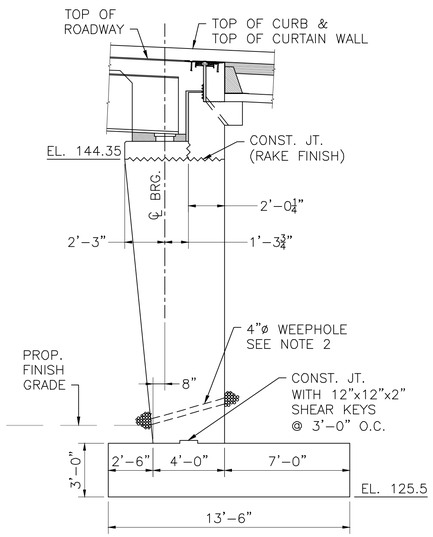

NORTH ABUTMENT TYPICAL SECTION
SCALE: ¼" = 1'-0"

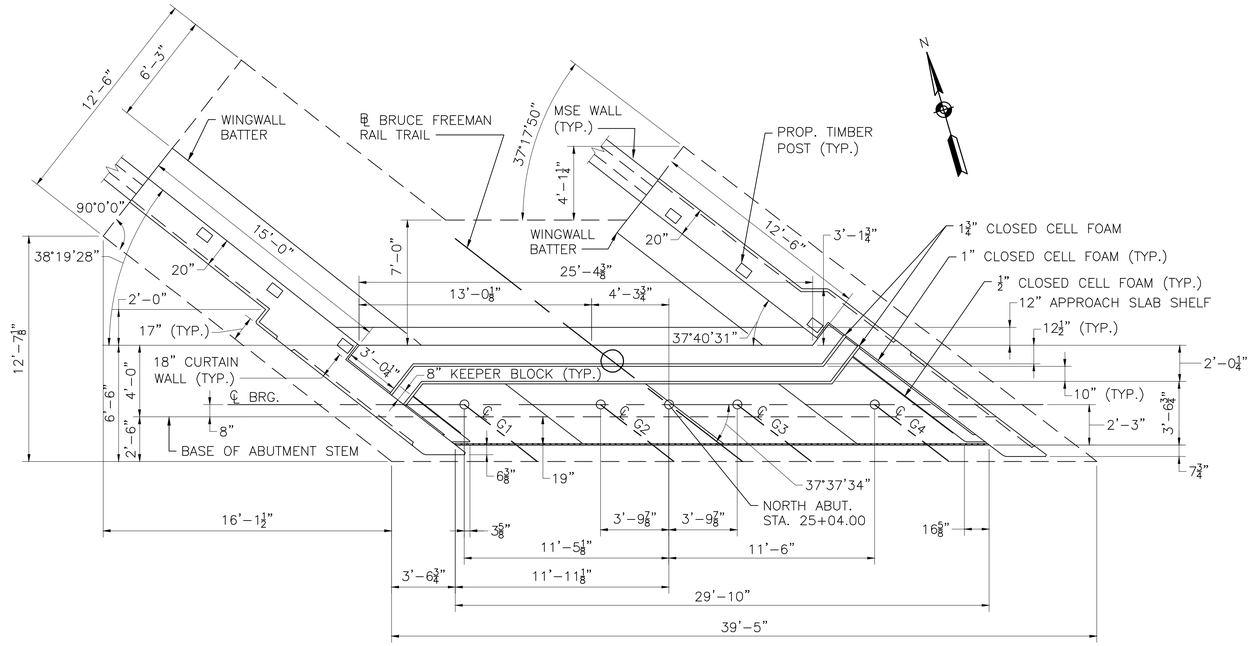

NORTH ABUTMENT PLAN
SCALE: ¼" = 1'-0"

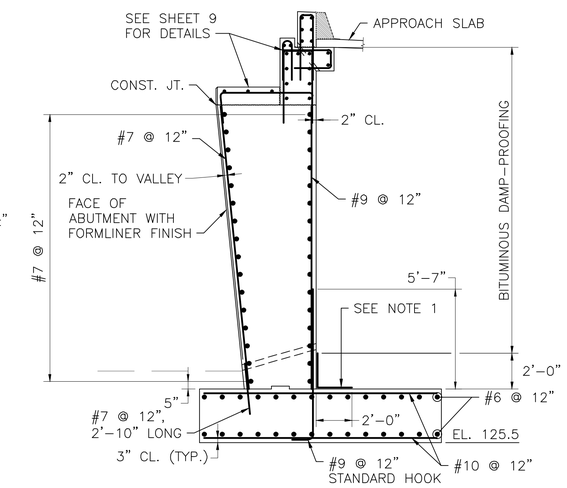

NORTH ABUTMENT REINFORCING
SCALE: ¼" = 1'-0"

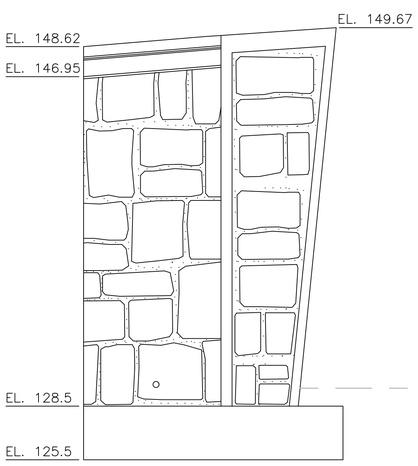

NORTHWEST ELEVATION
SCALE: ¼" = 1'-0"

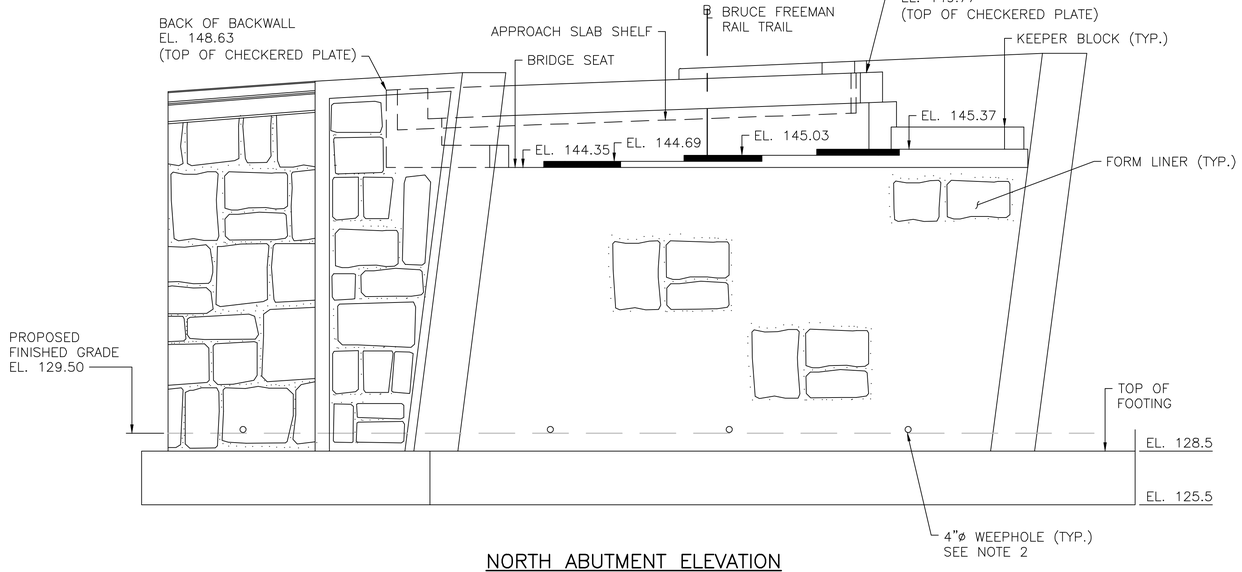

NORTH ABUTMENT ELEVATION
SCALE: ¼" = 1'-0"

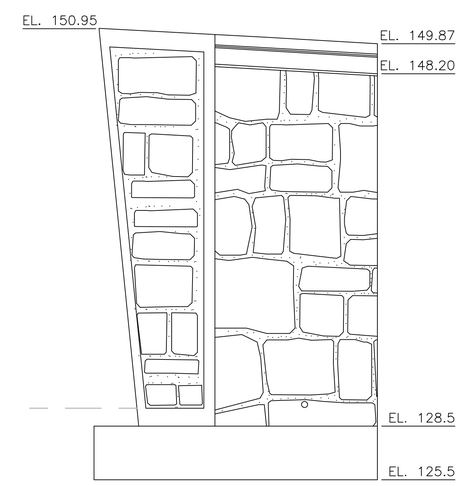

NORTHEAST ELEVATION
SCALE: ¼" = 1'-0"

NOTES:

1. MEMBRANE WATERPROOFING AND 8"x16"x2", 4000 PSI, ¾ IN, 610 CEMENT CONCRETE BLOCKS LAID IN MORTAR OR OTHER WATERPROOFING PROTECTIVE COURSE, MIN. 2" THICK AS SPECIFIED IN MHD STANDARD SPECIFICATIONS.
2. 4" ø WEEP HOLES 10'-0" O.C. (JUST ABOVE PROTECTIVE COURSE). PROVIDE 1 CUBIC YARD OF CRUSHED STONE AT EACH END OF WEEP HOLE.
3. ALL CONCRETE SHALL BE 4000 PSI, 1½ IN, 565 CEMENT CONCRETE EXCEPT THE BACKWALL, WHICH SHALL BE 4000 PSI, ¾ IN, 610 CEMENT CONCRETE.
4. THE FACTORED BEARING PRESSURE = 6.71 KSF AS PER AASHTO LRFD BRIDGE DESIGN SPECIFICATIONS STRENGTH I LOAD COMBINATION.

   FACTORED BEARING RESISTANCE = 8.00 KSF. FACTORED BEARING RESISTANCE IS THE PRODUCT OF THE NOMINAL BEARING RESISTANCE AND A RESISTANCE FACTOR OF 0.45.

MONTH DD, YYYY	ISSUED FOR CONSTRUCTION
DATE	DESCRIPTION
USE ONLY PRINTS OF LATEST DATE	

606223_BR(C19039)_07-11_14-16.DWG Plotted on 26-Jun-2018 12:16 PM
First Structural Submittal (S1) 27-June-2018

ACTON & CONCORD
BRUCE FREEMAN RAIL TRAIL PHASE 2B

STATE	FED. AID PROJ. NO.	SHEET NO.	TOTAL SHEETS
MA	–	78	146
PROJECT FILE NO. 606223			

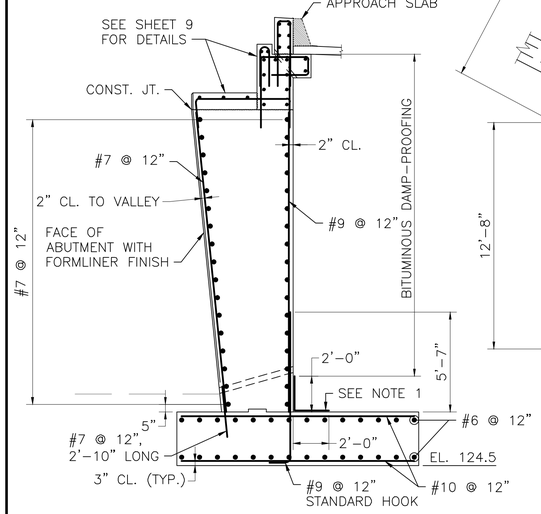

SOUTH ABUTMENT REINFORCING
SCALE: 1/4" = 1'-0"

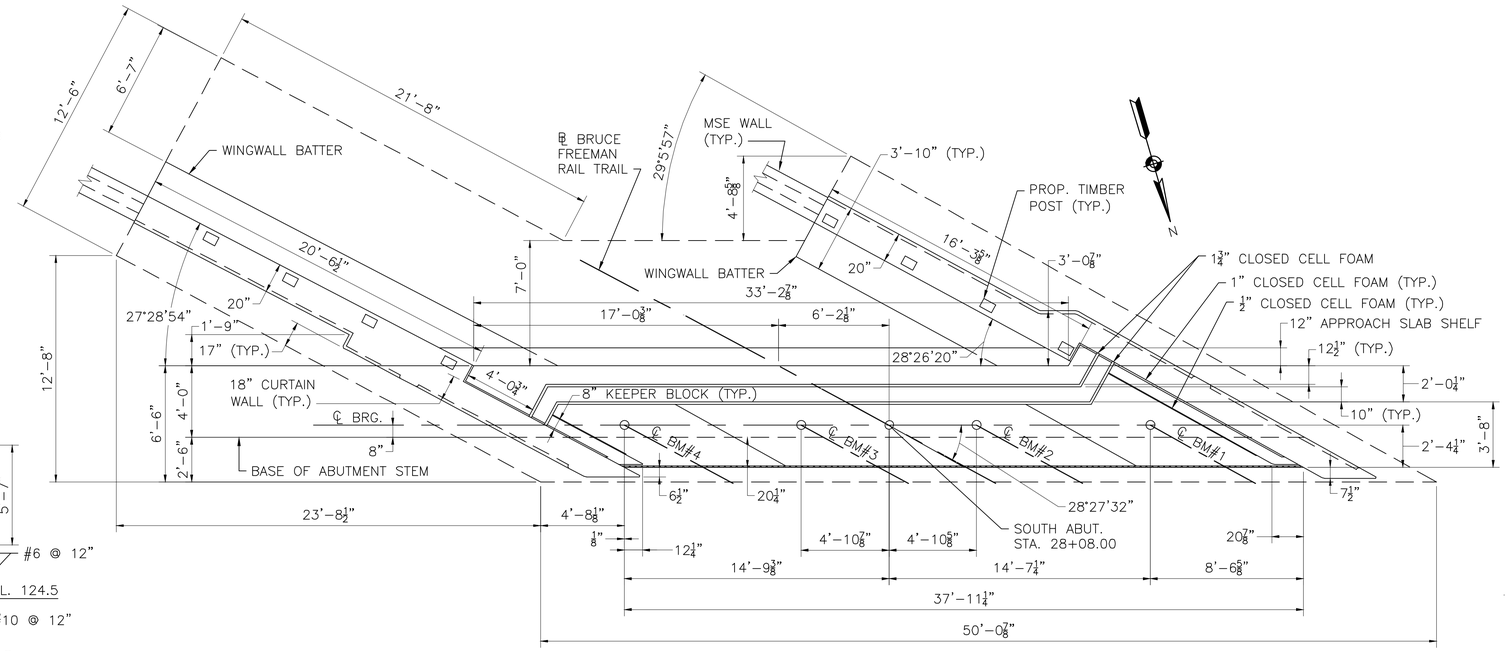

SOUTH ABUTMENT PLAN
SCALE: 1/4" = 1'-0"

SOUTH ABUTMENT PLAN, ELEVATION, AND SECTION

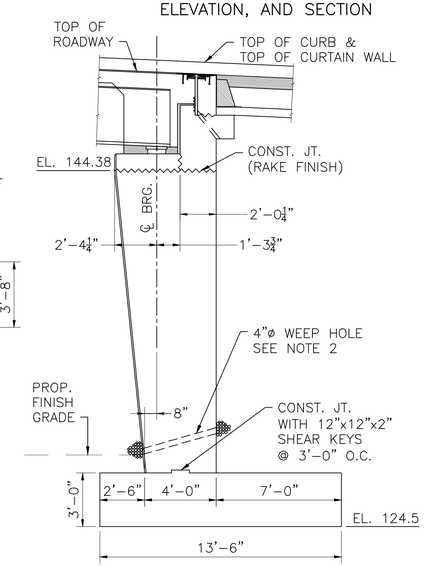

SOUTH ABUTMENT TYPICAL SECTION
SCALE: 1/4" = 1'-0"

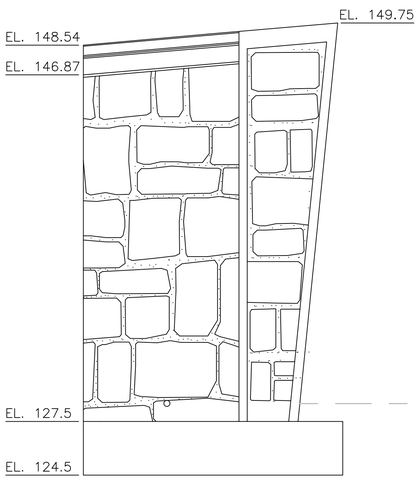

SOUTHEAST ELEVATION
SCALE: 1/4" = 1'-0"

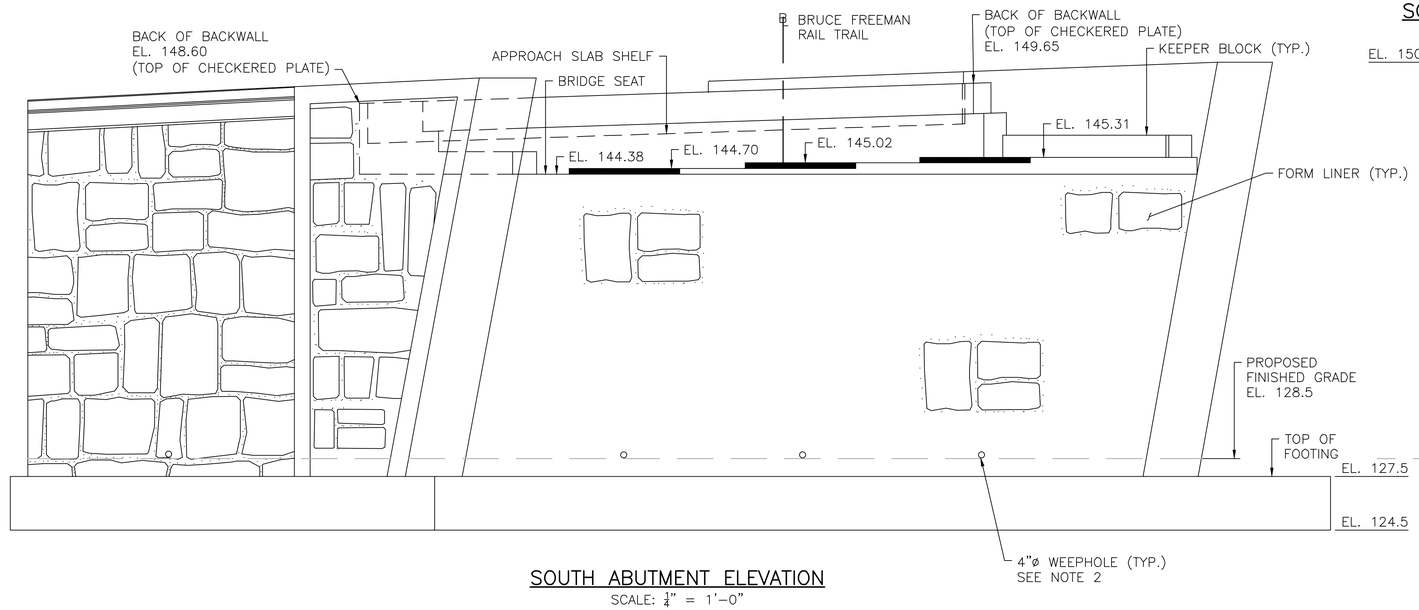

SOUTH ABUTMENT ELEVATION
SCALE: 1/4" = 1'-0"

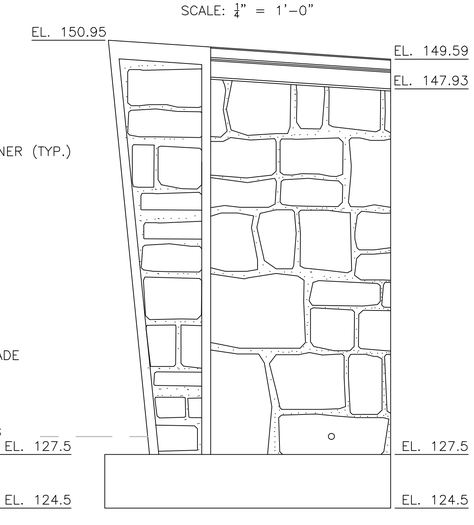

SOUTHWEST ELEVATION
SCALE: 1/4" = 1'-0"

NOTES:

1. MEMBRANE WATERPROOFING AND 8"x16"x2", 4000 PSI, 3/4 IN, 610 CEMENT CONCRETE BLOCKS LAID IN MORTAR OR OTHER WATERPROOFING PROTECTIVE COURSE, MIN. 2" THICK AS SPECIFIED IN MHD STANDARD SPECIFICATIONS.
2. 4" ø WEEP HOLES 10'-0" O.C. (JUST ABOVE PROTECTIVE COURSE). PROVIDE 1 CUBIC YARD OF CRUSHED STONE AT EACH END OF WEEP HOLE.
3. ALL CONCRETE SHALL BE 4000 PSI, 1 1/2 IN, 565 CEMENT CONCRETE EXCEPT THE BACKWALL, WHICH SHALL BE 4000 PSI, 3/4 IN, 610 CEMENT CONCRETE.
4. THE FACTORED BEARING PRESSURE = 6.50 KSF AS PER AASHTO LRFD BRIDGE DESIGN SPECIFICATIONS STRENGTH I LOAD COMBINATION.

   FACTORED BEARING RESISTANCE = 9.60 KSF. FACTORED BEARING RESISTANCE IS THE PRODUCT OF THE NOMINAL BEARING RESISTANCE AND A RESISTANCE FACTOR OF 0.45.

MONTH DD, YYYY	ISSUED FOR CONSTRUCTION
DATE	DESCRIPTION
USE ONLY PRINTS OF LATEST DATE	

606223_BR(C19039)_07-11_14-16.DWG Plotted on 26-Jun-2018 12:16 PM
First Structural Submittal (S1) 27-June-2018

ACTON & CONCORD
BRUCE FREEMAN RAIL TRAIL PHASE 2B

STATE	FED. AID PROJ. NO.	SHEET NO.	TOTAL SHEETS
MA	–	79	146
PROJECT FILE NO. 606223			

END OF DECK, WINGWALLS, AND FOUNDATION DETAILS

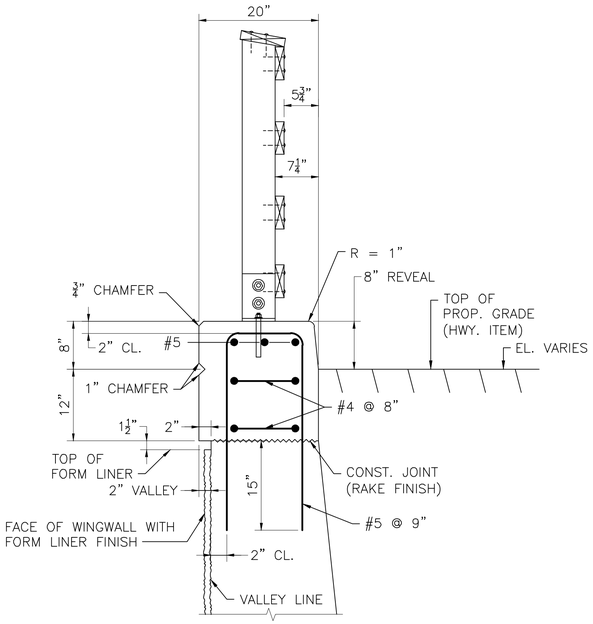

TOP OF WINGWALL DETAIL

SCALE: 1" = 1'-0"

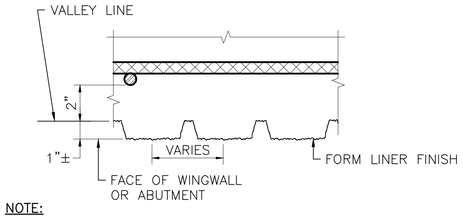

NOTE:

1. THE CONTRACTOR SHALL MAKE SURE THAT THE FORM LINER FINISH IS PLUMB AND LINED UP VERTICALLY FROM PANEL TO PANEL FOR THE FULL HEIGHT OF THE WALL.
2. THE HORIZONTAL JOINT MAY BE OMITTED IF THE CONTRACTOR CAN DEMONSTRATE THAT THE FORM LINER PANELS CAN BE INSTALLED END TO END WITHOUT CREATING A VISIBLE SEAM IN THE FINAL CAST CONCRETE.

TYPICAL FORM LINER DETAIL

SCALE: 3" = 1'-0"

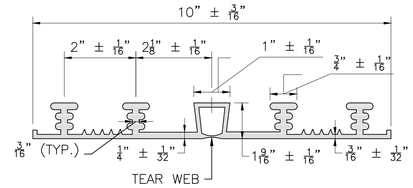

10" WATERSTOP

NOT TO SCALE

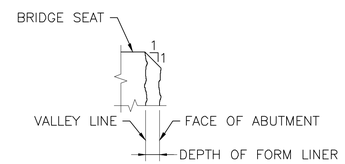

DETAIL AT BRIDGE SEAT

SCALE: 3" = 1'-0"

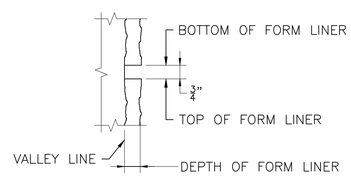

HORIZONTAL PANEL JOINT

SCALE: 3" = 1'-0"

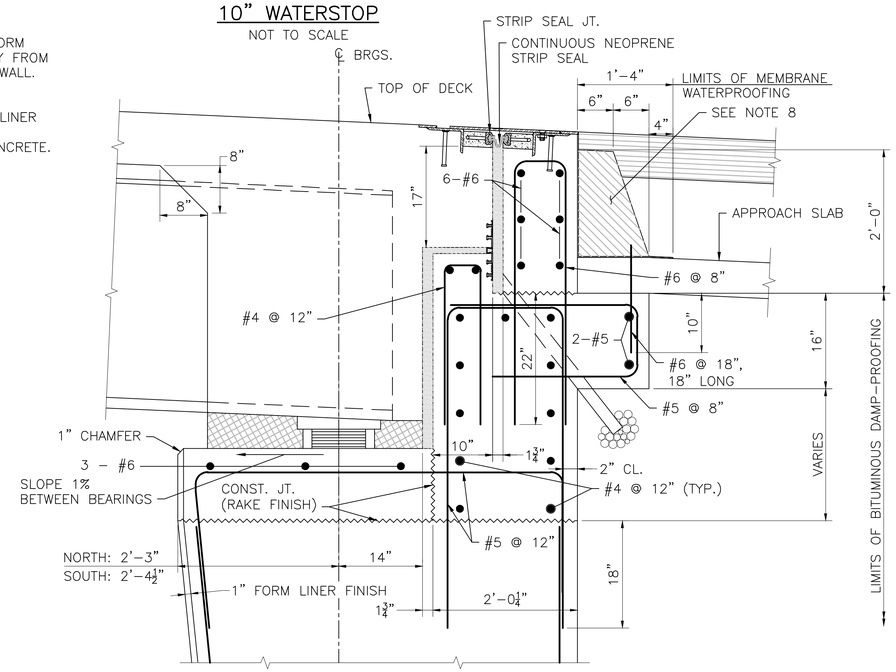

END OF DECK DETAIL

SCALE: 1" = 1'-0"

ROADWAY/SIDEWALK SECTION NOTES:

1. ALL REINFORCEMENT SHOWN IN THIS DETAIL SHALL BE COATED.
2. TOP OF BACKWALL SHALL BE TROWELED SMOOTH PARALLEL TO THE PROFILE GRADE.
3. BACKWALL BELOW CONSTRUCTION JOINT, KEEPER BLOCK AND CURTAIN WALL CONCRETE MUST BE PLACED AND SUFFICIENTLY CURED PRIOR TO PLACING THE END DIAPHRAGM CONCRETE.
4. THE END DIAPHRAGM CONCRETE SHALL BE 4000 PSI, ¾ IN, 585 HP CEMENT CONCRETE AND SHALL BE PLACED MONOLITHICALLY WITH THE DECK.
5. PRIOR TO PLACING THE END DIAPHRAGM CONCRETE, CLOSED CELL FOAM OF THE SPECIFIED THICKNESSES SHALL BE ATTACHED WITH ADHESIVE TO ALL SURFACES OF THE BACKWALL, KEEPER BLOCKS, AND CURTAIN WALLS AS SHOWN ON THE PLANS. EXPANDED POLYSTYRENE SHALL BE PLACED UNDER THE BEAM BOTTOM FLANGE AND THE BOTTOM OF THE END DIAPHRAGM SHALL BE FORMED AS SPECIFIED. THE CONTRACTOR SHALL INSURE THAT ALL ABUTMENT CONCRETE IS PROPERLY LINED. END DIAPHRAGM CONCRETE MUST NOT COME IN DIRECT CONTACT WITH THE ABUTMENT CONCRETE.
6. AFTER THE END DIAPHRAGM HAS CURED SUFFICIENTLY, PLACE THE APPROACH SLAB CONCRETE AND REMAINDER OF BACKWALL CONCRETE. THE BACKWALL TROUGH WILL BE FORMED WITH CLOSED CELL FOAM AND CARE SHALL BE TAKEN TO INSURE THAT CONCRETE DOES NOT ENTER THE TROUGH SUMP.
7. COVER THE BACKWALL TROUGH OPENING SECURELY TO KEEP DEBRIS OUT UNTIL READY TO INSTALL THE STRIP SEAL JOINT.
8. PROTECTIVE COURSE TO BE HOT MIX ASPHALT DENSE BINDER COURSE FOR BRIDGES, PLACED IN 2" LAYERS AND COMPACTED WITH A MECHANICAL HAND-GUIDED TAMPER WITHIN 12 HOURS AFTER PLACING MEMBRANE WATERPROOFING.

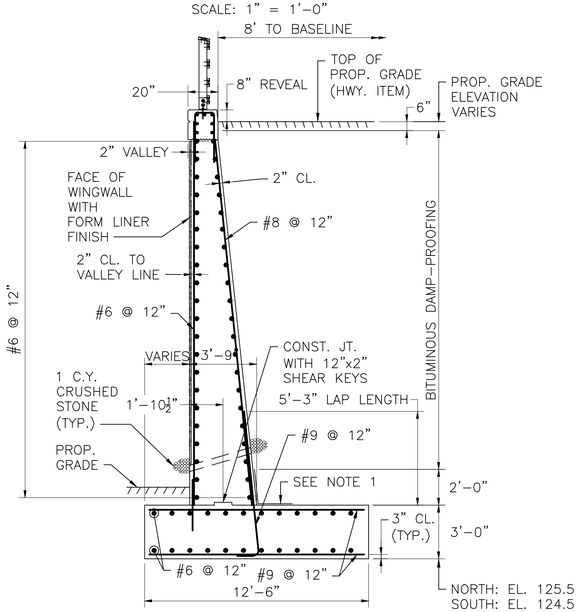

TYPICAL WINGWALL DETAIL

SCALE: ¼" = 1'-0"

WINGWALL NOTES:

1. MEMBRANE WATERPROOFING AND 8"x16"x2", 4000 PSI, ¾ IN, 610 CEMENT CONCRETE BLOCKS LAID IN MORTAR OR OTHER WATERPROOFING PROTECTIVE COURSE, MIN. 2" THICK AS SPECIFIED IN MHD STANDARD SPECIFICATIONS.
2. 4" ø WEEP HOLES 10'-0" O.C. (JUST ABOVE PROTECTIVE COURSE). PROVIDE 1 CUBIC YARD OF CRUSHED STONE AT EACH END OF WEEP HOLE.
3. ALL CONCRETE SHALL BE 4000 PSI, 1½ IN, 565 CEMENT CONCRETE.

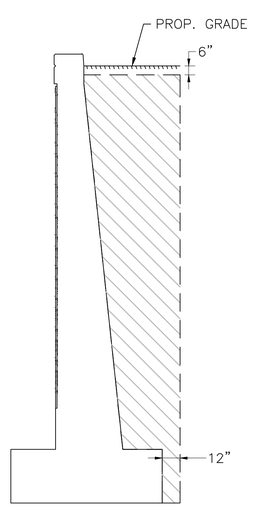

LIMITS OF GRAVEL BORROW FOR WINGWALLS

SCALE: ¼" = 1'-0"

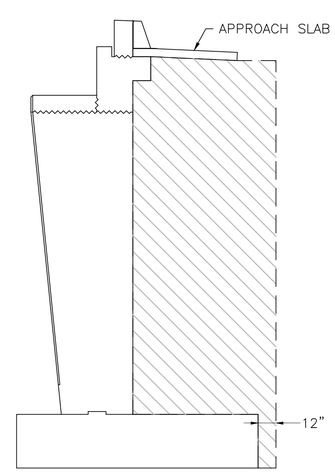

LIMITS OF GRAVEL BORROW FOR ABUTMENTS

SCALE: ¼" = 1'-0"

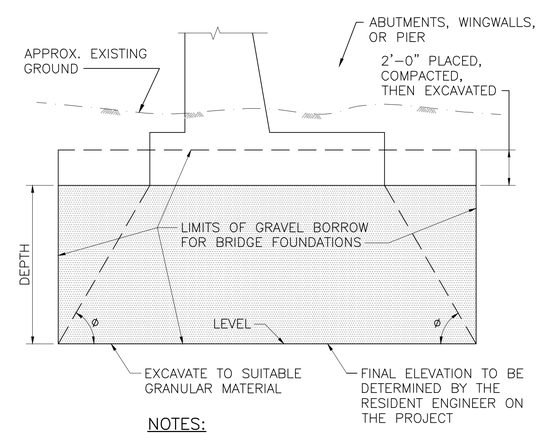

NOTES:

1. ø = 45° FOR DEPTH OF 5'-0" OR LESS.
   ø = 60° FOR DEPTH OVER 5'-0".
2. SAME TREATMENT IS TO BE USED AT ENDS OF WALLS, PIERS, AND ABUTMENTS.

LIMITS OF GRAVEL BORROW FOR BRIDGE FOUNDATIONS

NOT TO SCALE

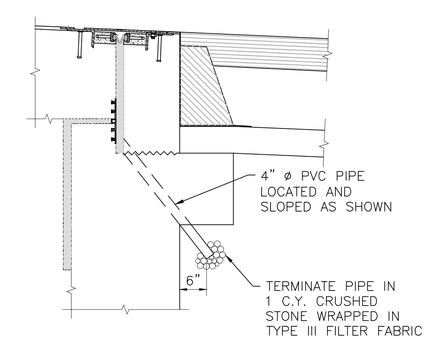

END OF DECK DRAIN

SCALE: ¾" = 1'-0"

MONTH DD, YYYY	ISSUED FOR CONSTRUCTION
DATE	DESCRIPTION
USE ONLY PRINTS OF LATEST DATE	

606223_BR(C19039)_07-11_14-16.DWG Plotted on 26-Jun-2018 12:16 PM
First Structural Submittal (S1) 27-June-2018

ACTON & CONCORD
BRUCE FREEMAN RAIL TRAIL PHASE 2B

STATE	FED. AID PROJ. NO.	SHEET NO.	TOTAL SHEETS
MA	–	80	146
PROJECT FILE NO. 606223			

CURTAIN WALL PLANS AND DETAILS (1 OF 2)

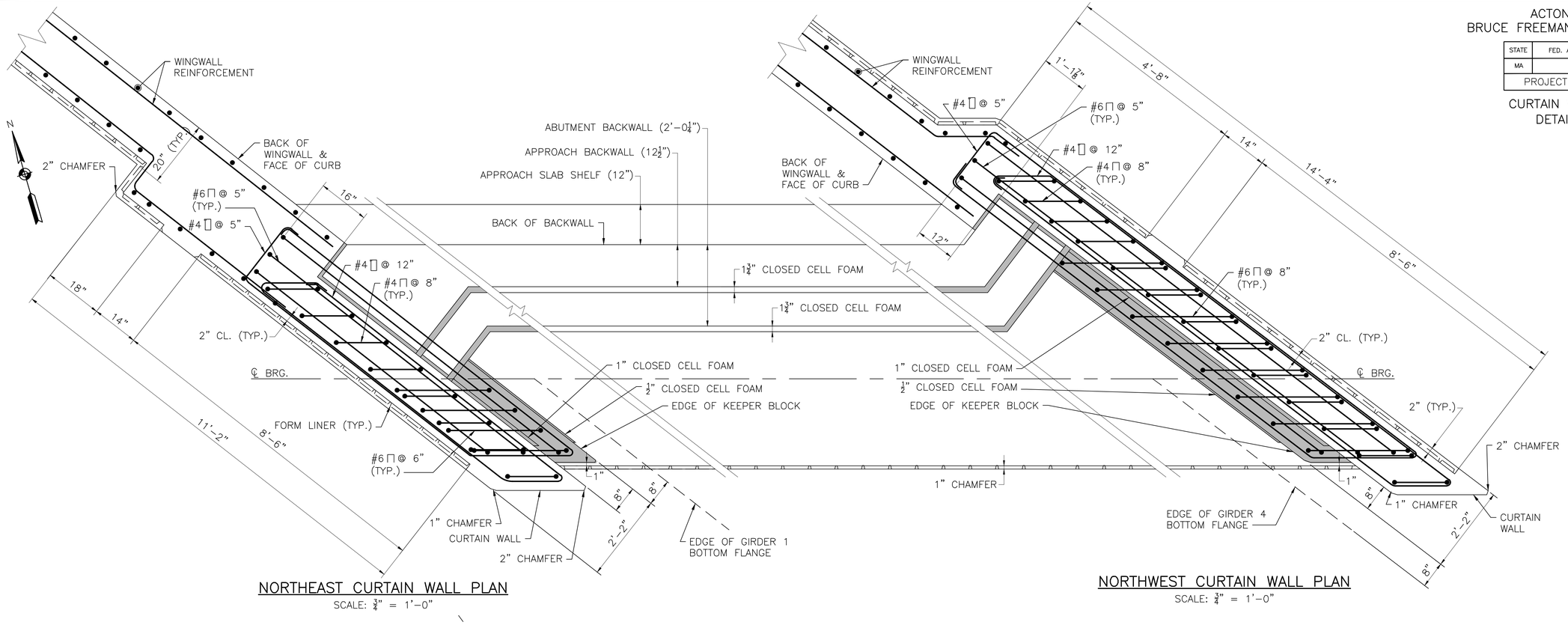

NORTHEAST CURTAIN WALL PLAN
SCALE: ¾" = 1'-0"

NORTHWEST CURTAIN WALL PLAN
SCALE: ¾" = 1'-0"

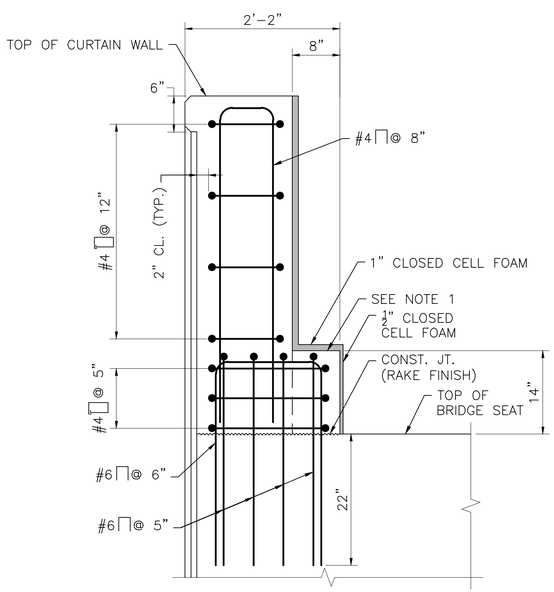

NORTHEAST CURTAIN WALL SECTION
SCALE: 1" = 1'-0"

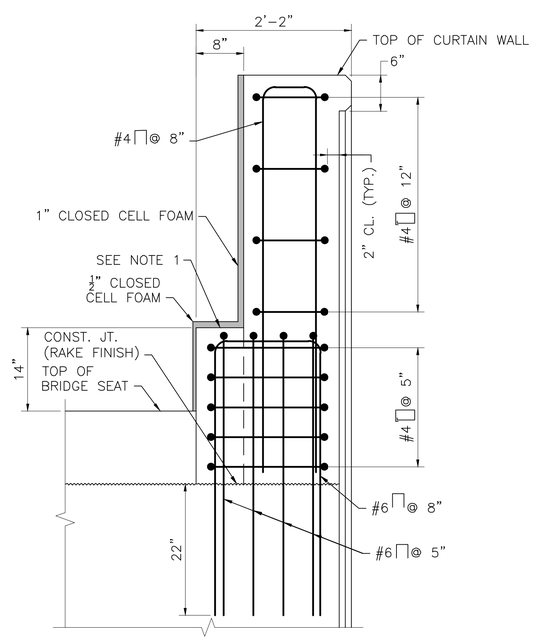

NORTHWEST CURTAIN WALL SECTION
SCALE: 1" = 1'-0"

NOTES:

1. TOP OF KEEPER BLOCK SHALL BE TROWELED SMOOTH PARALLEL TO PROFILE GRADE.
2. ABUTMENT REINFORCEMENT BELOW CONSTRUCTION JOINT HAS BEEN OMITTED FOR CLARITY.

DATE	DESCRIPTION
MONTH DD, YYYY	ISSUED FOR CONSTRUCTION
USE ONLY PRINTS OF LATEST DATE	

606223_BR(C19039)_07-11_14-16.DWG Plotted on 26-Jun-2018 12:16 PM
First Structural Submittal (S1) 27-June-2018

ACTON & CONCORD
BRUCE FREEMAN RAIL TRAIL PHASE 2B

STATE	FED. AID PROJ. NO.	SHEET NO.	TOTAL SHEETS
MA	–	81	146
PROJECT FILE NO. 606223			

CURTAIN WALL PLANS AND DETAILS (2 OF 2)

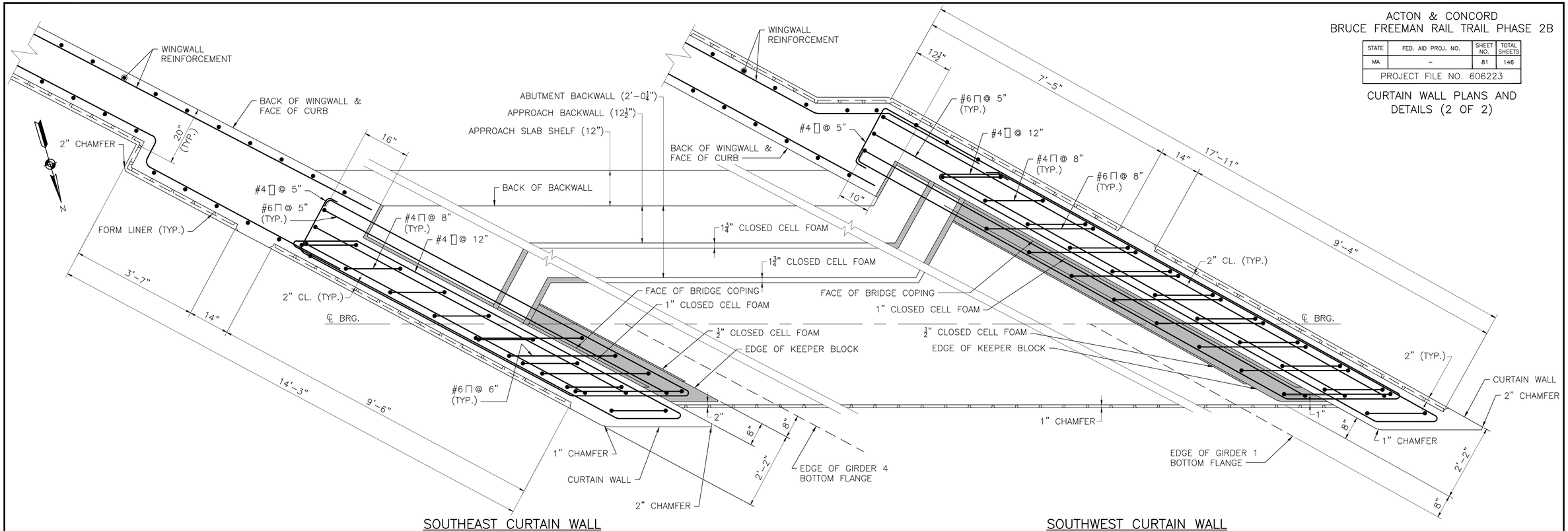

SOUTHEAST CURTAIN WALL
SCALE: ¾" = 1'-0"

SOUTHWEST CURTAIN WALL
SCALE: ¾" = 1'-0"

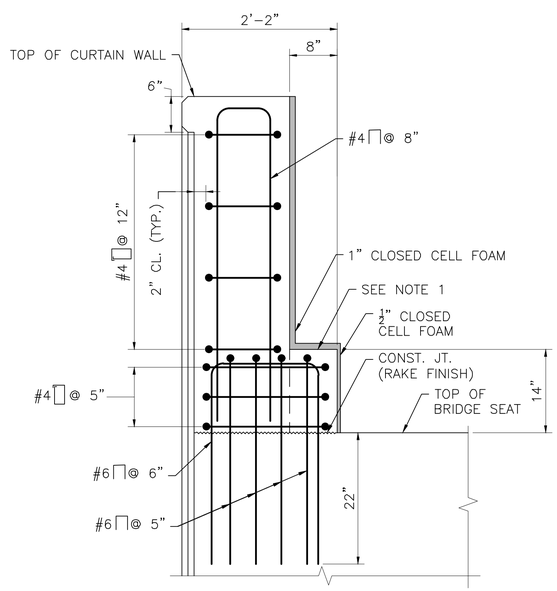

SOUTHEAST CURTAIN WALL SECTION
SCALE: 1" = 1'-0"

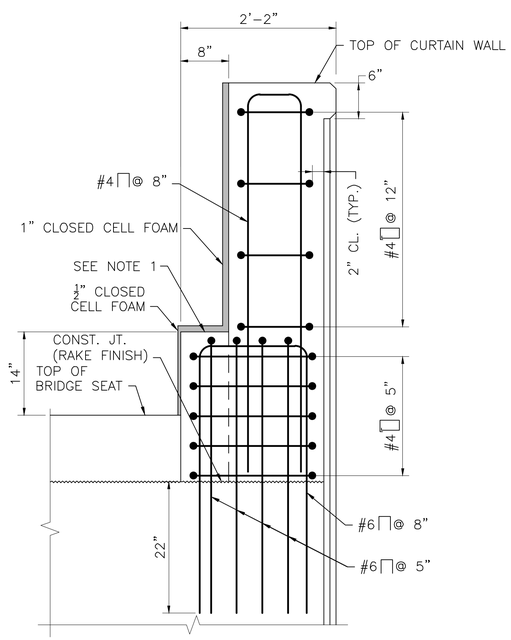

SOUTHWEST CURTAIN WALL SECTION
SCALE: 1" = 1'-0"

NOTES:

1. TOP OF KEEPER BLOCK SHALL BE TROWELED SMOOTH PARALLEL TO PROFILE GRADE.
2. ABUTMENT REINFORCEMENT BELOW CONSTRUCTION JOINT HAS BEEN OMITTED FOR CLARITY.

MONTH DD, YYYY	ISSUED FOR CONSTRUCTION
DATE	DESCRIPTION
USE ONLY PRINTS OF LATEST DATE	

606223_BR(C19039)_07-11_14-16.DWG Plotted on 26-Jun-2018 12:16 PM
First Structural Submittal (S1) 27-June-2018

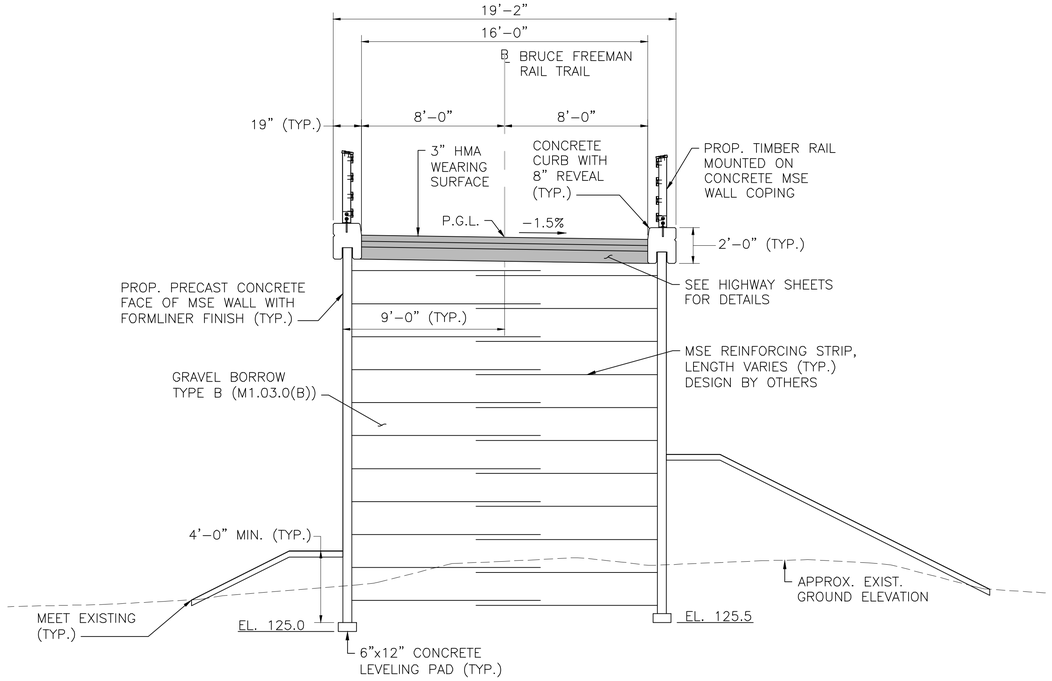

NORTH MSE WALL APPROACH SECTION (LOOKING SOUTH, STA. 24+50)

SCALE: $\frac{1}{4}$" = 1'–0"

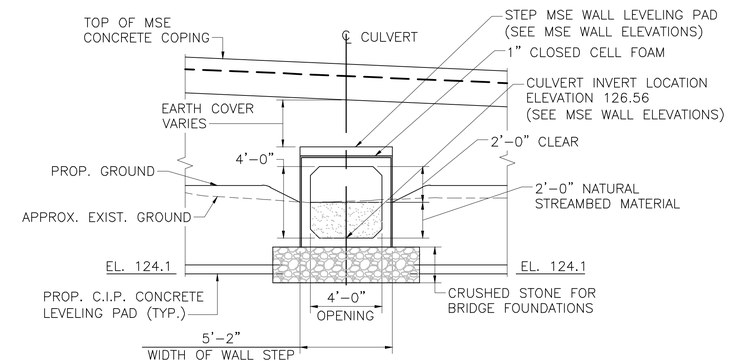

CONCRETE CULVERT FOR DRAINAGE

SCALE: $\frac{1}{4}$" = 1'–0"

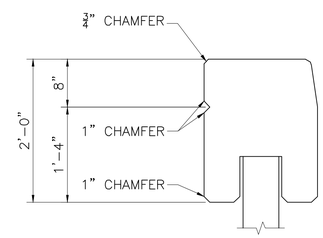

MSE CAP DETAIL

SCALE: 1" = 1'–0"

MSE NOTES:

1. ORGANIC SOILS SHALL BE REMOVED AND REPLACED WITH GRAVEL BORROW FOR BRIDGE FOUNDATIONS AS DETERMINED BY THE ENGINEER.
2. REFER TO SPECIAL PROVISIONS FOR THE FOLLOWING:
   - INFORMATION REGARDING PANELS, JOINTS, FILTER FABRIC AND MSE WALL REQUIREMENTS.
   - DESIGN CRITERIA AND MATERIAL REQUIREMENTS NO SHOWN ON THESE PLANS.
   - MSE WALL FOUNDATION PREPARATION REQUIREMENTS

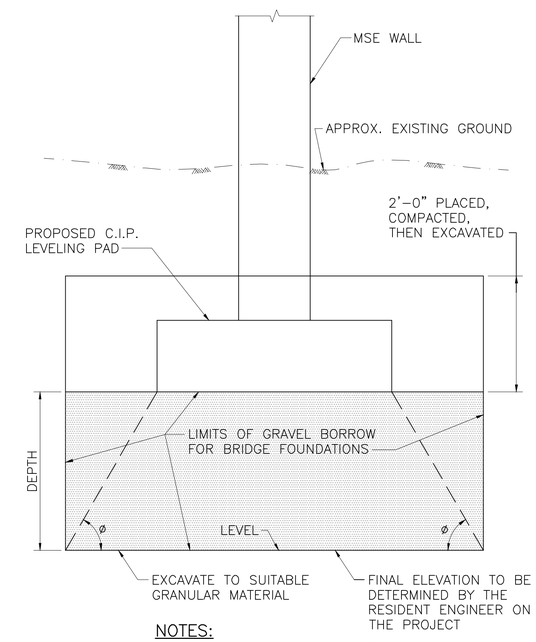

NOTES:

1. ø = 45° FOR DEPTH OF 5'–0" OR LESS.
   ø = 60° FOR DEPTH OVER 5'–0".
2. SAME TREATMENT IS TO BE USED AT ENDS OF WALLS, PIERS, AND ABUTMENTS.

LIMITS OF GRAVEL BORROW FOR BRIDGE FOUNDATIONS

NOT TO SCALE

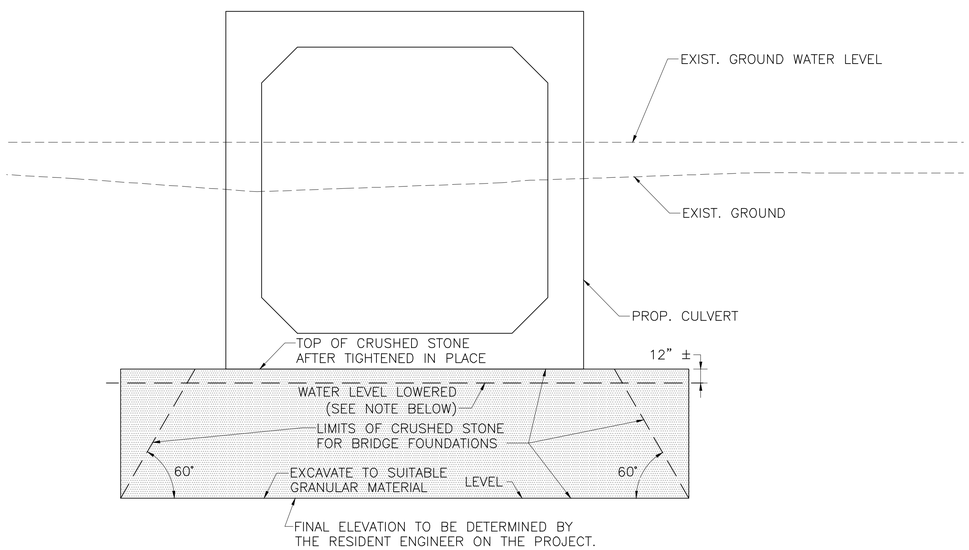

NOTE:

LOWER WATER LEVEL AS MUCH AS POSSIBLE WITHOUT DISTURBING THE GRANULAR SOIL (SIDES AND BOTTOM) AND TIGHTEN THE CRUSHED STONE IN PLACE (SEE STANDARD SPECIFICATIONS).

LIMITS OF CRUSHED STONE FOR BRIDGE FOUNDATIONS

NOT TO SCALE

MONTH DD, YYYY	ISSUED FOR CONSTRUCTION
DATE	DESCRIPTION
USE ONLY PRINTS OF LATEST DATE	

606223_BR(C19039)_12-13.DWG Plotted on 26-Jun-2018 12:18 PM
Xxxxxx Structural Submittal (S#) DD-Month-YYYY

ACTON & CONCORD
BRUCE FREEMAN RAIL TRAIL PHASE 2B

STATE	FED. AID PROJ. NO.	SHEET NO.	TOTAL SHEETS
MA	–	83	146
PROJECT FILE NO. 606223			

MSE WALL PLAN AND ELEVATION

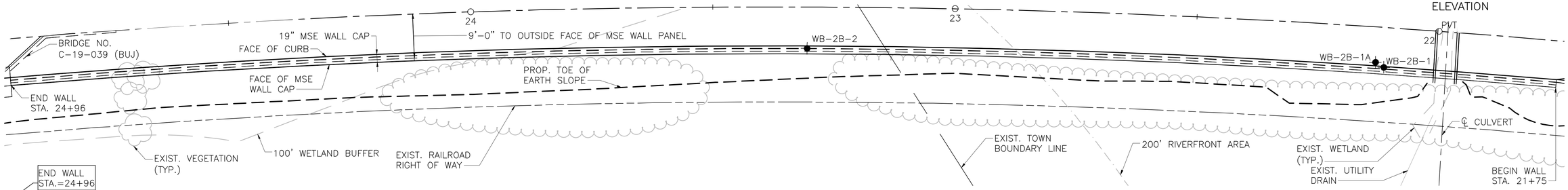

NORTHEAST MSE WALL PLAN

SCALE: 1" = 10'-0"

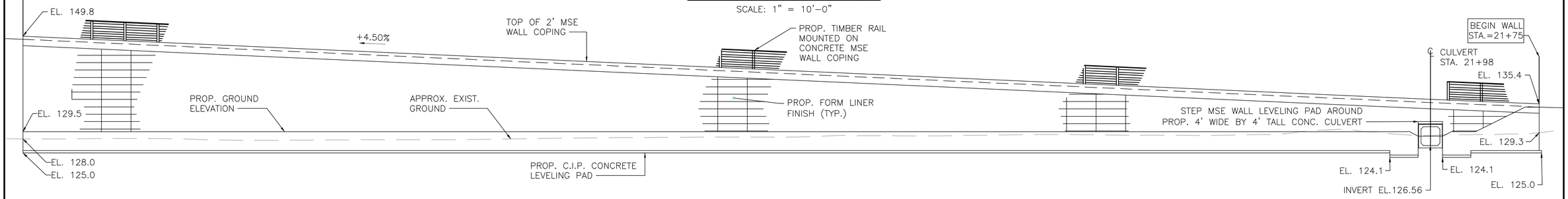

NORTHEAST MSE WALL ELEVATION

SCALE: 1" = 10'-0"

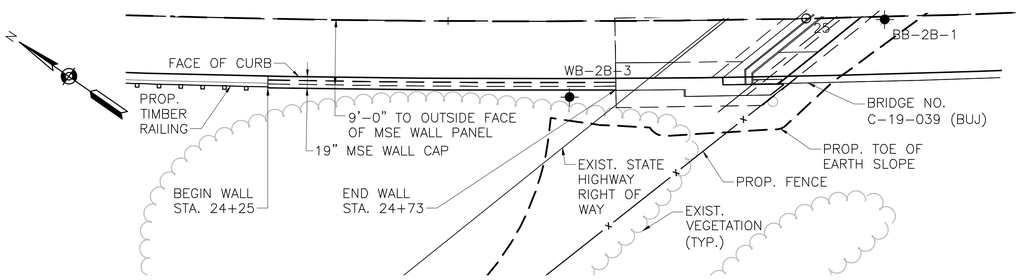

NORTHWEST MSE WALL PLAN

SCALE: 1" = 10'-0"

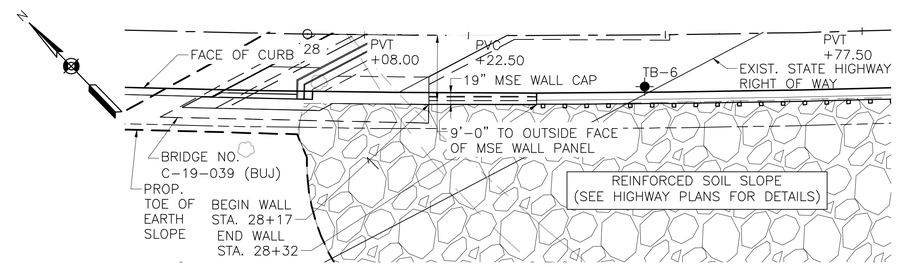

SOUTHWEST MSE WALL PLAN

SCALE: 1" = 10'-0"

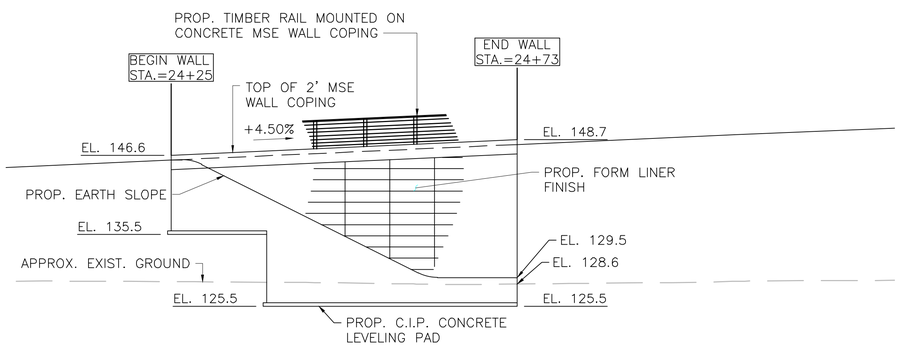

NORTHWEST MSE WALL ELEVATION

SCALE: 1" = 10'-0"

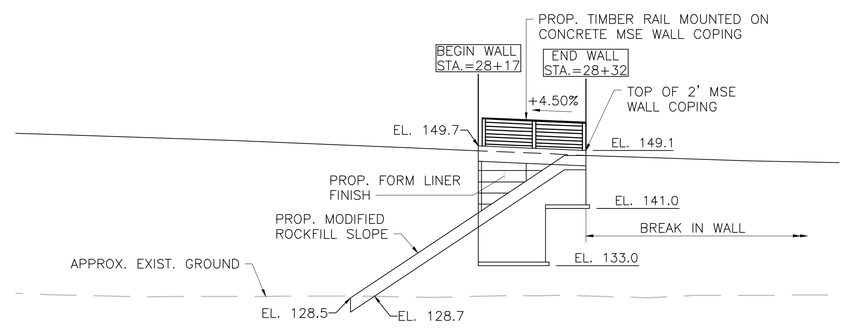

SOUTHWEST MSE WALL ELEVATION

SCALE: 1" = 10'-0"

NOTE:
FOR SOUTHEAST MSE WALL PLAN AND ELEVATION, SEE BRIDGE C-19-037 (BF4) PLANS

DATE	DESCRIPTION
MONTH DD, YYYY	ISSUED FOR CONSTRUCTION
USE ONLY PRINTS OF LATEST DATE	

606223_BRC(19039)_12-13.DWG Plotted on 26-Jun-2018 12:19 PM
Xxxxxx Structural Submittal (S#) DD-Month-YYYY

STATE	FED. AID PROJ. NO.	SHEET NO.	TOTAL SHEETS
MA	–	84	146
PROJECT FILE NO. 606223			

STRIP SEAL JOINT DETAILS

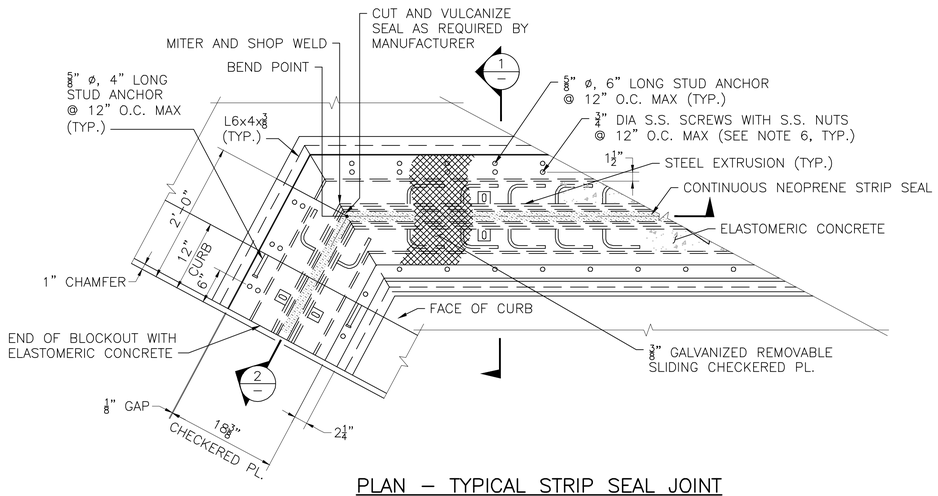

PLAN – TYPICAL STRIP SEAL JOINT

SCALE: 1" = 1'–0"

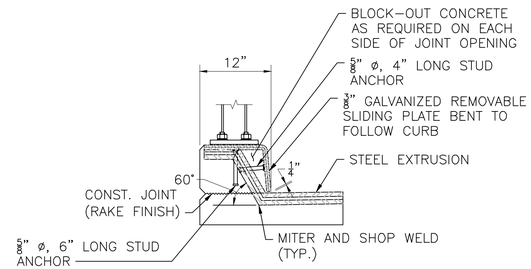

SECTION 2

SCALE: 1" = 1'–0"

STRIP SEAL JOINT NOTES

1. THE DETAILS SHOWN HERE ARE INTENDED AS A GENERAL GUIDE FOR A TYPICAL GLANDULAR TYPE STRIP SEAL JOINT SYSTEM. SHOP DRAWINGS WHICH INCLUDE DETAILS OF THE GLAND SHAPE, STEEL EXTRUSION SHAPE, WELDING PROCEDURE SPECIFICATIONS, ANCHOR ARRANGEMENT, TEMPERATURE CORRECTION REQUIREMENTS, AND TEMPORARY SUPPORT DETAILS SHALL BE SUBMITTED FOR APPROVAL OF THE ENGINEER ACCORDING TO THE STANDARD SPECIFICATIONS.
2. ALL STRUCTURAL STEEL COMPONENTS SHALL CONFORM TO AASHTO M270 GRADE 36. AFTER THE COMPLETION OF ALL WELDING OPERATIONS STEEL PLATE ASSEMBLIES SHALL BE HOT–DIP GALVANIZED.
3. ELASTOMERIC CONCRETE BLOCKOUT SHALL BE SANDBLASTED, CLEANED WITH COMPRESSED OIL LESS AIR, AND PRIMED WITH BONDING COMPOUND PRIOR TO CASTING ELASTOMERIC CONCRETE.
4. NEOPRENE STRIP SEAL SHALL BE BONDED TO STEEL EXTRUSION WITH APPROVED ADHESIVE.
5. INSTALL CONTINUOUS NEOPRENE STRIP SEAL IN THE FIELD. SPLICING OF SEAL IS NOT PERMITTED.
6. PRIOR TO PLACEMENT OF SAFETY CURB CONCRETE, LUBRICATE STAINLESS STEEL SCREWS WITH GRAPHITE AND SET SECURELY IN PLACE. MACHINE SCREWS TO BE TEMPORARILY REMOVED AFTER CONCRETE HAS ATTAINED FINAL SET.
7. NO WELDING OF PORTIONS OF STEEL EXTRUSIONS IN DIRECT CONTACT WITH NEOPRENE SEAL SHALL BE PERMITTED.

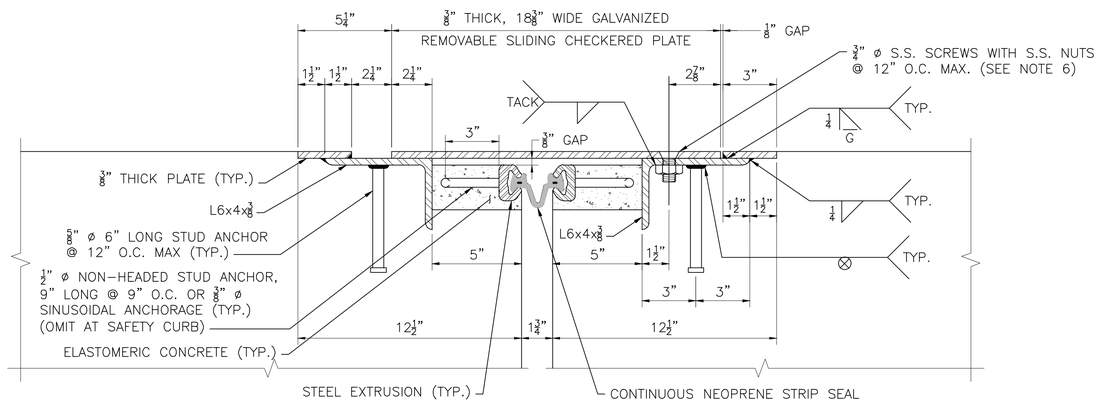

SECTION 1

SCALE: 3" = 1'–0"

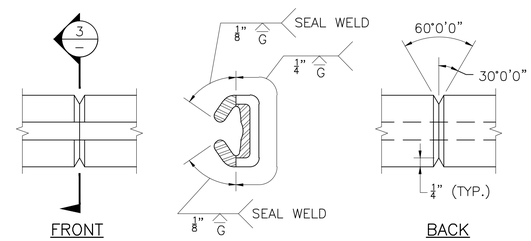

STEEL EXTRUSION SHOP SPLICE DETAIL

SCALE: 6" = 1'–0"

ACCEPTABLE STRIP SEAL JOINT			
MANUFACTURER	STEEL EXTRUSION MODEL	NEOPRENE STRIP SEAL MODEL	JOINT OPENING @ 70°F
WATSON BOWMAN ACME	TYPE A	SE–400	1 3/4"
D.S. BROWN	TYPE SSA2	A2R–400	1 3/4"

MONTH DD, YYYY	ISSUED FOR CONSTRUCTION
DATE	DESCRIPTION
USE ONLY PRINTS OF LATEST DATE	

606223_BR(C19039)_07-11_14-16.DWG Plotted on 26-Jun-2018 12:19 PM
First Structural Submittal (S1) 27-June-2018

ACTON & CONCORD
BRUCE FREEMAN RAIL TRAIL PHASE 2B

STATE	FED. AID PROJ. NO.	SHEET NO.	TOTAL SHEETS
MA	–	85	146
PROJECT FILE NO. 606223			

ACUTE CORNER & APPROACH SLAB
PLANS AND DETAILS

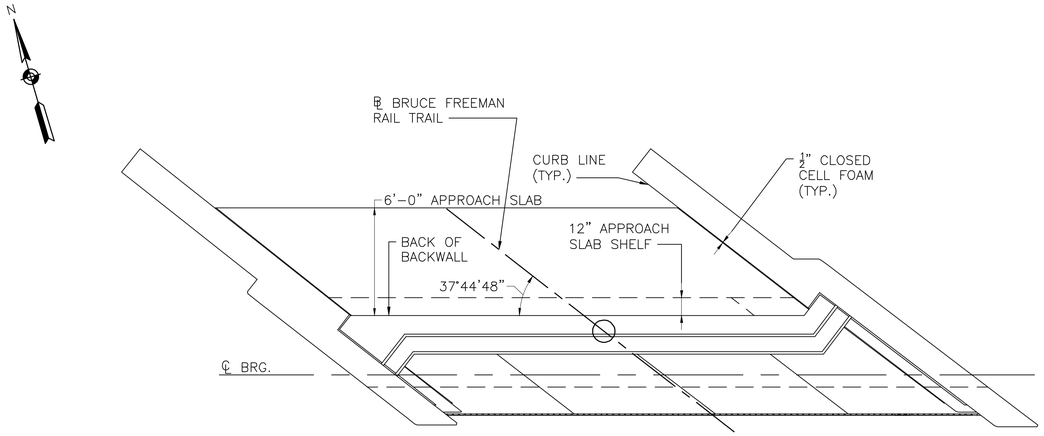

NORTH APPROACH SLAB PLAN
SCALE: ¼" = 1'–0"

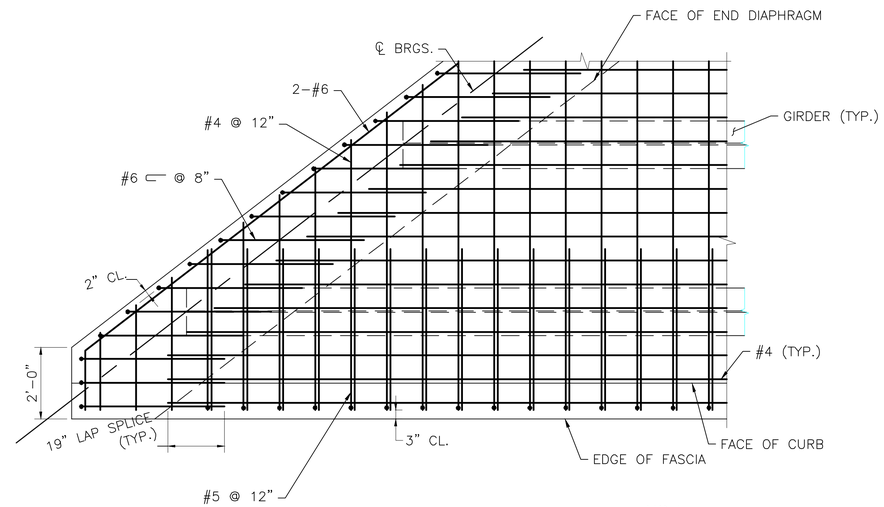

PLAN AT ACUTE CORNER
SCALE: ½" = 1'–0"

NOTE:
NORTHWEST CORNER SHOWN
SOUTHEAST CORNER SIMILAR

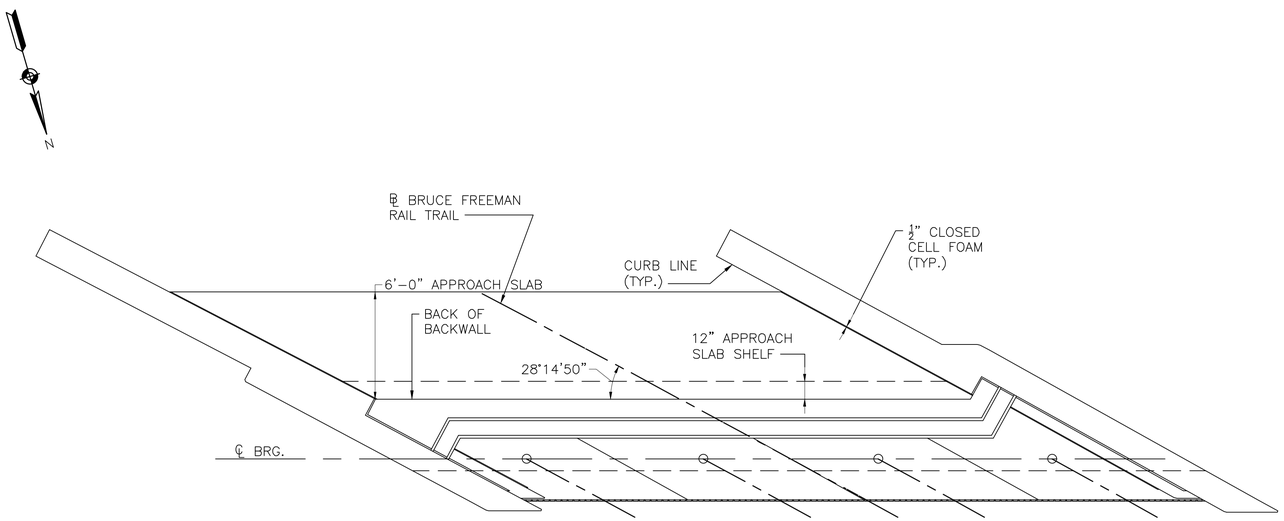

SOUTH APPROACH SLAB PLAN
SCALE: ¼" = 1'–0"

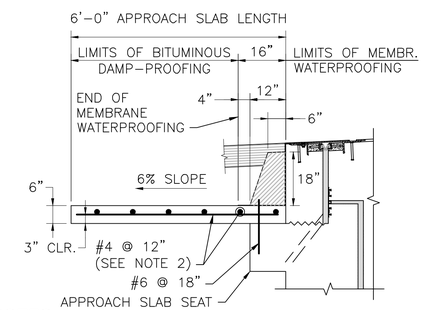

NOTES:

1. APPROACH SLAB TO BE 4000 PSI, 1½ IN, 565 CEMENT CONCRETE.
2. PLACE LONGITUDINAL REINFORCEMENT PERPENDICULAR TO ABUTMENT. PLACE TRANSVERSE REINFORCEMENT PARALLEL TO ABUTMENT.

MODIFIED APPROACH SLAB TYPICAL SECTION
SCALE: ½" = 1'–0"

MONTH DD, YYYY	ISSUED FOR CONSTRUCTION
DATE	DESCRIPTION
USE ONLY PRINTS OF LATEST DATE	

606223_BR(C19039)_07-11_14-16.DWG Plotted on 26-Jun-2018 12:19 PM
Fisrt Structural Submittal (S1) 27-June-2018

ACTON & CONCORD
BRUCE FREEMAN RAIL TRAIL PHASE 2B

STATE	FED. AID PROJ. NO.	SHEET NO.	TOTAL SHEETS
MA	–	86	146
PROJECT FILE NO. 606223			

END DIAPHRAGM PLAN, ELEVATION, AND SECTION

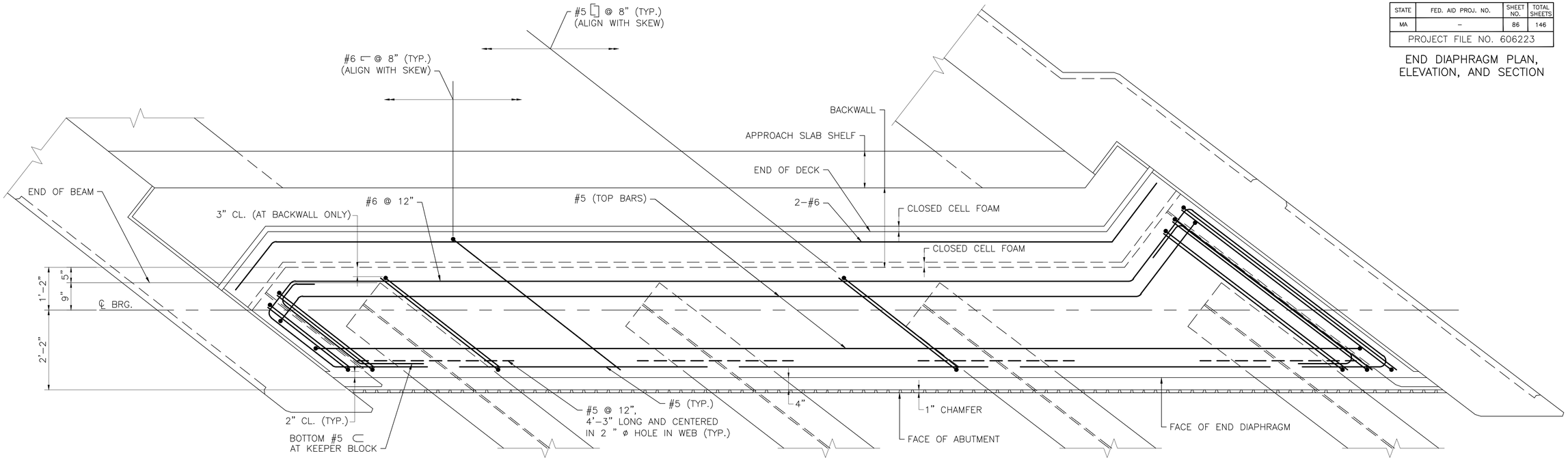

TYPICAL END DIAPHRAGM PLAN

SCALE: 3/8" = 1'–0"

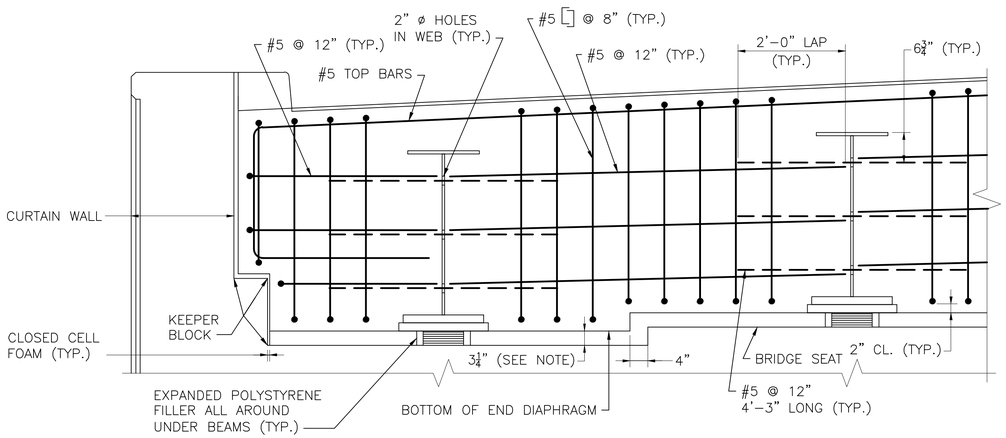

AT KEEPER BLOCK/CURTAIN WALL *TYPICAL INTERIOR BAY*

NOTES:

1. CONTRACTOR MAY USE EXPANDED POLYSTYRENE FILLER OR A REMOVABLE FORM TO FORM THE BOTTOM OF THE END DIAPHRAGM.

TYPICAL END DIAPHRAGM ELEVATION

SCALE: 3/4" = 1'–0"

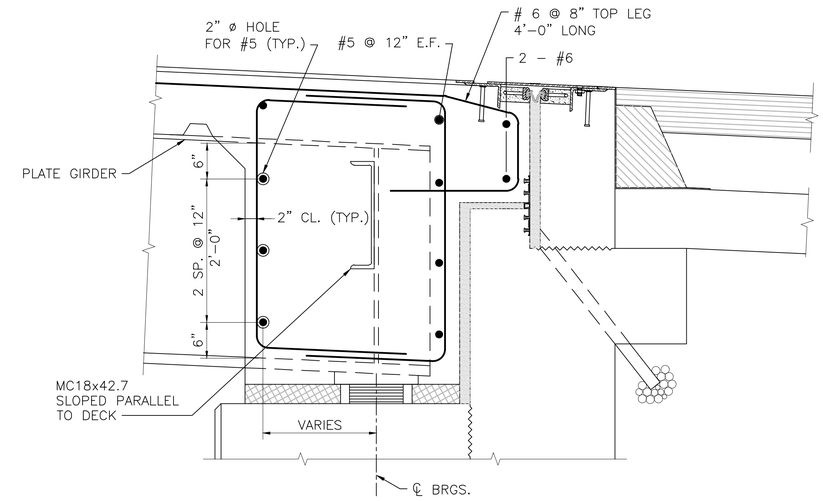

DETAILS AT ABUTMENT – ROADWAY SECTION

SCALE: 1" = 1'–0"

MONTH DD, YYYY	ISSUED FOR CONSTRUCTION
DATE	DESCRIPTION
USE ONLY PRINTS OF LATEST DATE	

606223_BR(C19039)_07-11_14-16.DWG Plotted on 26-Jun-2018 12:19 PM
First Structural Submittal (S1) 27-June-2018

ACTON & CONCORD
BRUCE FREEMAN RAIL TRAIL PHASE 2B

STATE	FED. AID PROJ. NO.	SHEET NO.	TOTAL SHEETS
MA	–	87	146
PROJECT FILE NO. 606223			

PIER PLAN, ELEVATION, AND DETAILS

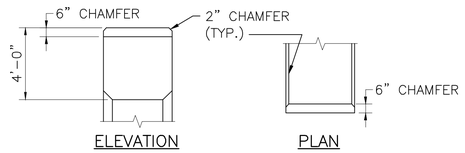

PIER CAP ENDS
SCALE: 1/4" = 1'-0"

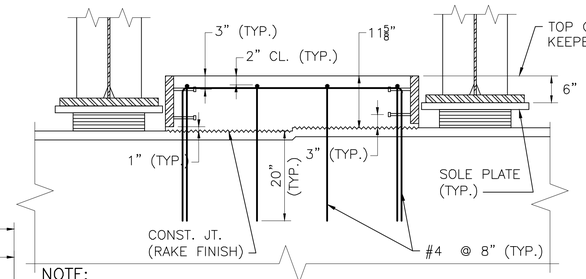

NOTE:
TOP OF INTERMEDIATE KEEPER BLOCK SHALL BE TROWELED SMOOTH.

SECTION 4
SCALE: 3/4" = 1'-0"

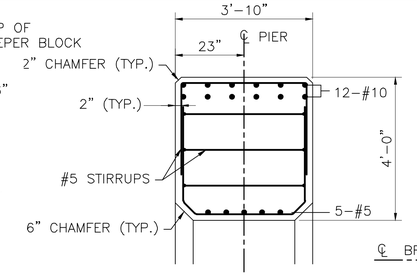

PIER CAP DETAIL
SCALE: 1/2" = 1'-0"

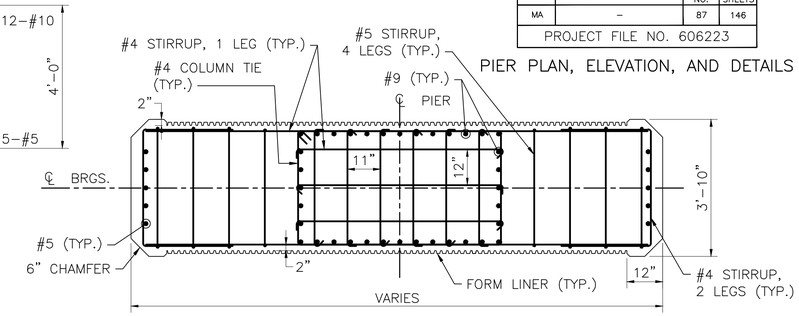

SECTION 6
SCALE: 1/2" = 1'-0"

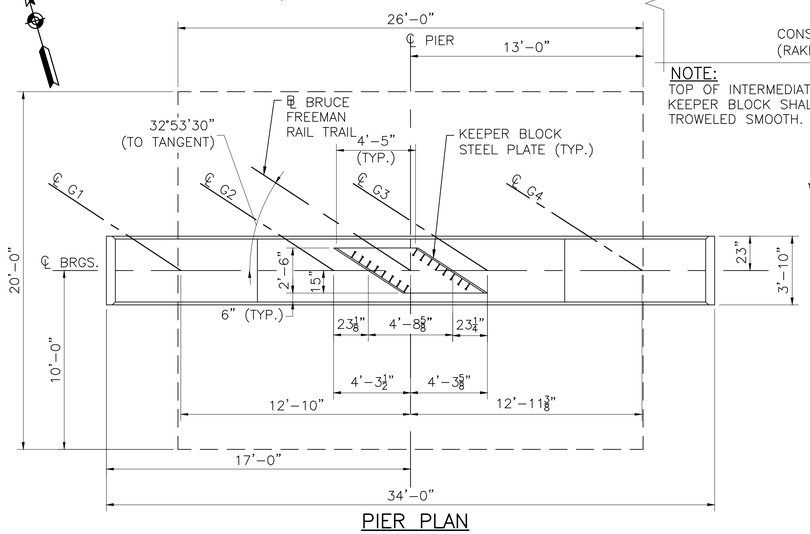

PIER PLAN
SCALE: 1/4" = 1'-0"

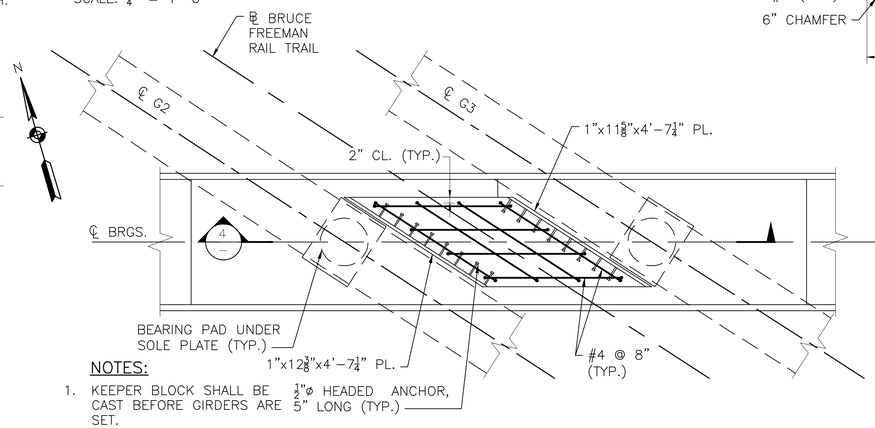

NOTES:
1. KEEPER BLOCK SHALL BE CAST BEFORE GIRDERS ARE SET.
2. STEEL PLATES EMBEDDED IN KEEPER BLOCK SHALL BE HOT-DIP GALVANIZED.

PLAN OF KEEPER BLOCK
SCALE: 1/2" = 1'-0"

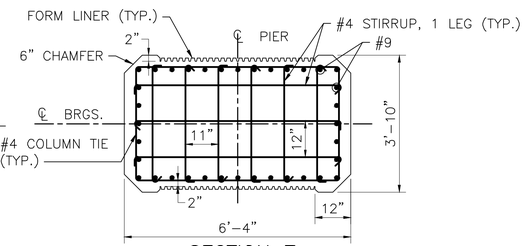

SECTION 7
SCALE: 1/2" = 1'-0"

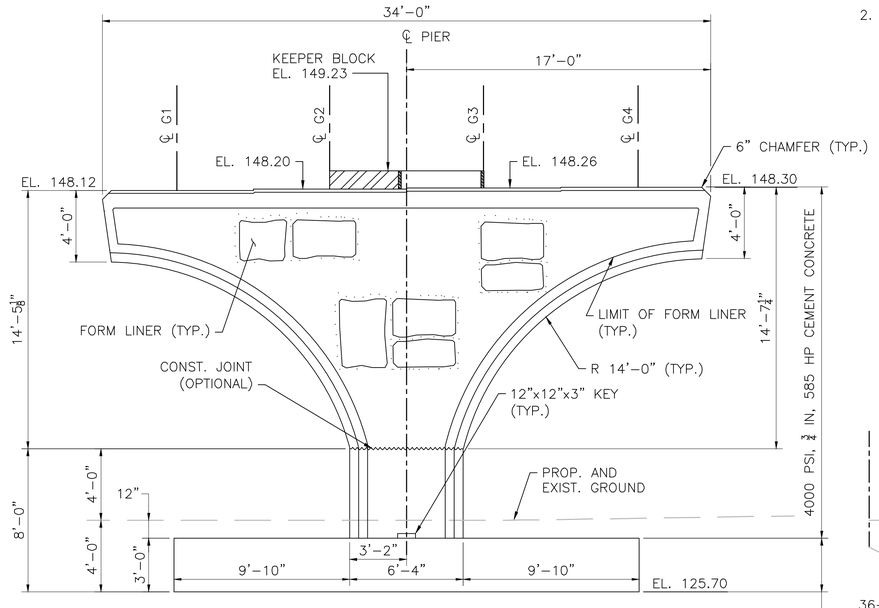

PIER ELEVATION
SCALE: 1/4" = 1'-0"

4000 PSI, 1 1/2 IN, 565 CEMENT CONCRETE

NOTE:
ALL KEYS TO BE SLIGHTLY TAPERED.

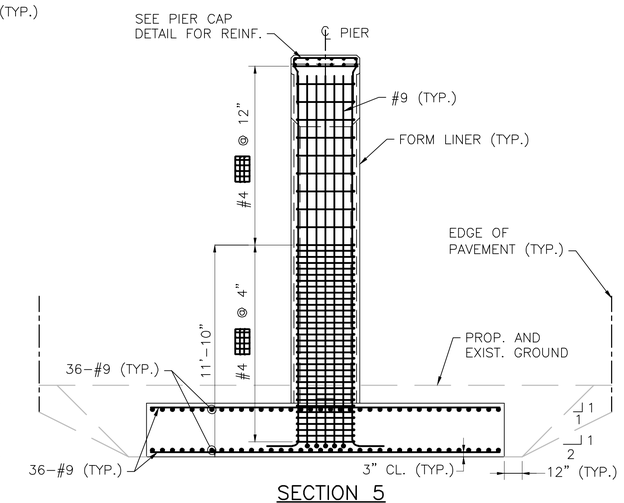

SECTION 5
SCALE: 1/4" = 1'-0"

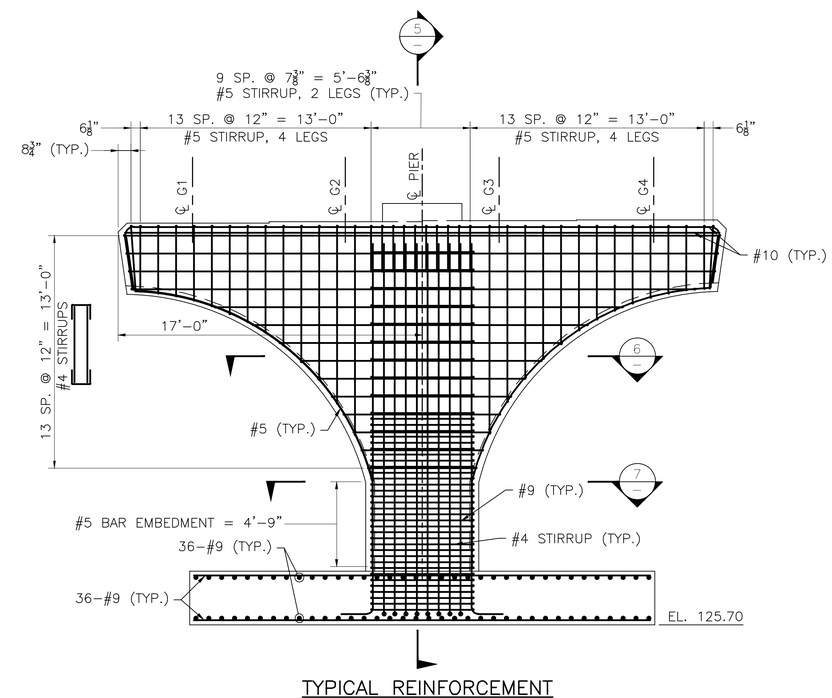

TYPICAL REINFORCEMENT
SCALE: 1/4" = 1'-0"

MONTH DD, YYYY	ISSUED FOR CONSTRUCTION
DATE	DESCRIPTION
USE ONLY PRINTS OF LATEST DATE	

606223_BR(C19039)_17.DWG Plotted on 26-Jun-2018 12:19 PM
First Structural Submittal (S1) 27-June-2018

ACTON & CONCORD
BRUCE FREEMAN RAIL TRAIL PHASE 2B

STATE	FED. AID PROJ. NO.	SHEET NO.	TOTAL SHEETS
MA	–	88	146
PROJECT FILE NO. 606223			

FRAMING PLAN AND BEAM ELEVATIONS

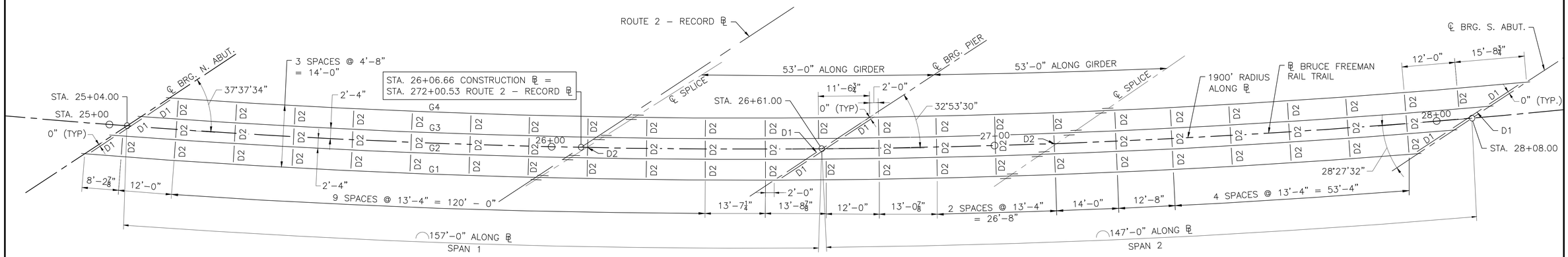

FRAMING PLAN

SCALE: $\frac{3}{32}$" = 1'–0"

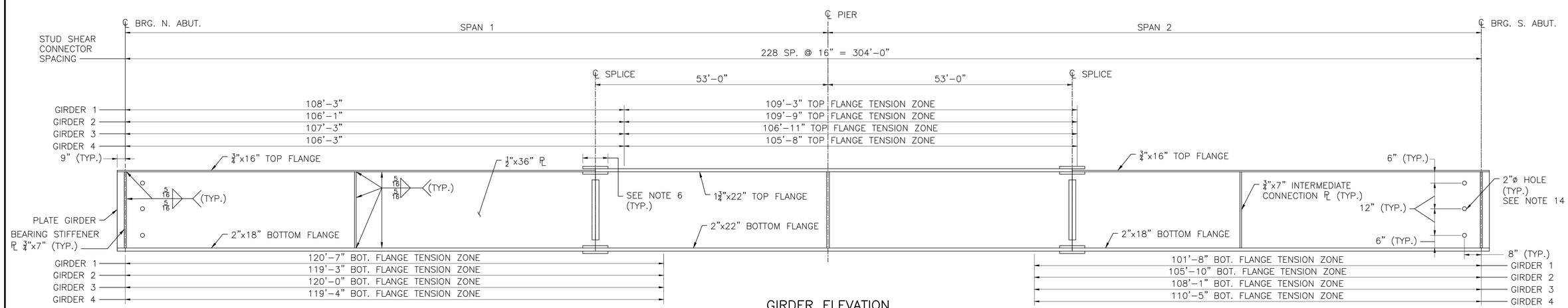

GIRDER ELEVATION

N.T.S.

NOTES:

1. D1= MC18x42.7 (TYP. END DIAPHRAGM)
   D2= MC18x42.7 (TYP. INTERMEDIATE DIAPHRAGM)
2. SEE SHEET 20 FOR DIAPHRAGM AND SPLICE DETAILS.
3. THE MAIN LOAD CARRYING MEMBERS ARE GIRDERS 1 THROUGH 4.
4. ALL STEEL SHALL CONFORM TO AASHTO M 270 GRADE 50. ALL GIRDERS SHALL BE METALIZED WITH ZINC ALUMINUM WIRE (6 – 8 MILS) AND COATED WITH AN APPROPRIATE SEALER (ZONE 1).
5. FOR CAMBER TABLES SEE SHEET 21.
6. FOR PLACEMENT OF STUD SHEAR CONNECTORS OVER THE SPLICE, SEE SPLICE DETAIL ON SHEET 20.
7. GIRDER TENSION ZONE DIMENSIONS SHOWN ARE ORIENTED NORTH TO SOUTH.
8. CHANGE IN SPLICE LOCATION AND/OR ADDITIONAL FIELD SPLICES SHALL BE DESIGNED BY A REGISTERED PROFESSIONAL ENGINEER IN THE STATE OF MASSACHUSETTS AND SUBMITTED FOR APPROVAL BY THE ENGINEER OF RECORD.
9. ALL BEARING STIFFENERS/END CONNECTION PLATES SHALL BE PLUMB.
10. ALL INTERMEDIATE STIFFENERS SHALL BE PERPENDICULAR TO THE WEB AND TO THE GIRDER FLANGES.
11. END OF GIRDERS SHALL BE FABRICATED SO THAT UNDER FULL DEAD LOAD THE ENDS WILL BE PLUMB.
12. SEE CLIP DETAIL ON SHEET 20.
13. BEARING STIFFENER PLATE AT TENSION FLANGE SHALL BE MILLED FOR TIGHT FIT AND WELDED WITH $\frac{5}{16}$" FILLET WELDS, BOTH SIDES OF PLATE.
14. 2"ø HOLES AT END OF GIRDER ARE FOR END DIAPHRAGM REINFORCEMENT.
15. AN INTERMEDIATE CONNECTION PLATE WILL BE INSTALLED AT EACH DIAPHRAGM LOCATION, SEE FRAMING PLAN FOR NUMBER AND SPACING.

SPAN LENGTHS

GIRDER	SPAN 1	SPAN 2	TOTAL
G1	155'–10⅜"	145'–5¾"	301'–4⅛"
G2	156'–7⅜"	146'–5⅞"	303'–1¼"
G3	157'–4⅜"	147'–6¼"	304'–11"
G4	158'–2¼"	148'–7"	306'–9¼"

NOTE: GIRDERS ARE CONCENTRIC.

DATE	DESCRIPTION
MONTH DD, YYYY	ISSUED FOR CONSTRUCTION
USE ONLY PRINTS OF LATEST DATE	

606223_BR(C19039)_18 FRAMING PLAN _BEAM ELEVATIONS.DWG Plotted on 26-Jun-2018 12:20 PM
First Structural Submittal (S1) 27-June-2018

ACTON & CONCORD
BRUCE FREEMAN RAIL TRAIL PHASE 2B

STATE	FED. AID PROJ. NO.	SHEET NO.	TOTAL SHEETS
MA	–	89	146
PROJECT FILE NO. 606223			

STRUCTURAL STEEL DETAILS

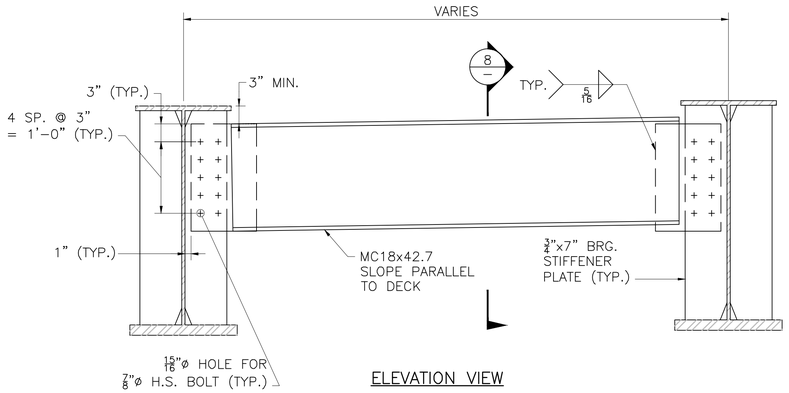

ELEVATION VIEW

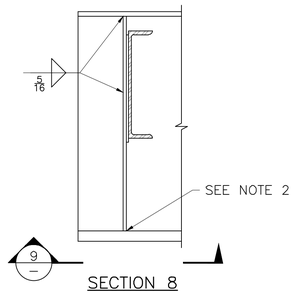

SECTION 8

NOTES:

1. SEE CLIP DETAIL ON THIS SHEET.
2. BEARING STIFFENER PLATE AT BOTTOM FLANGE SHALL BE MILLED FOR TIGHT FIT AND WELDED WITH 5/16" FILLET WELDS BOTH SIDES OF PLATE.
3. TERMINATE FILLET WELDS 1/2" SHORT OF ALL PLATE ENDS.

END DIAPHRAGM DETAILS

SCALE: 1" = 1'-0"

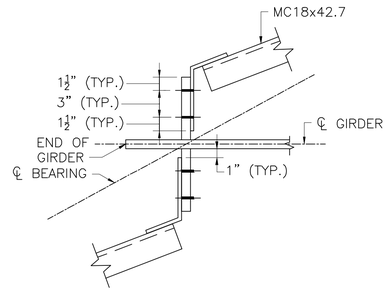

SECTION 9

SCALE: 1 1/2" = 1'-0"

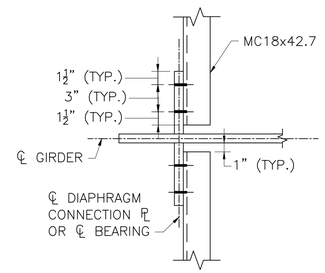

SECTION 11

SCALE: 1 1/2" = 1'-0"

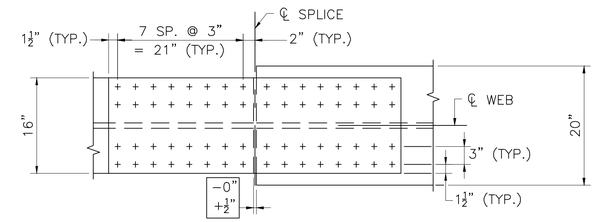

TOP FLANGE

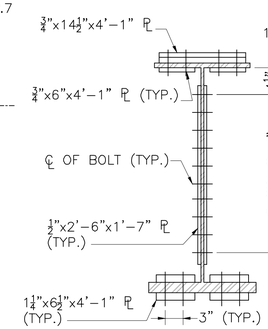

SECTION 12

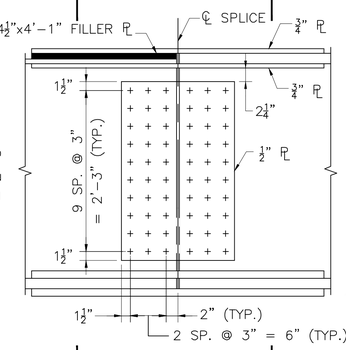

ELEVATION

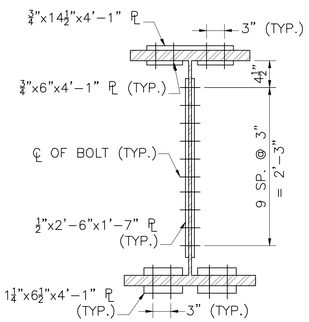

SECTION 13

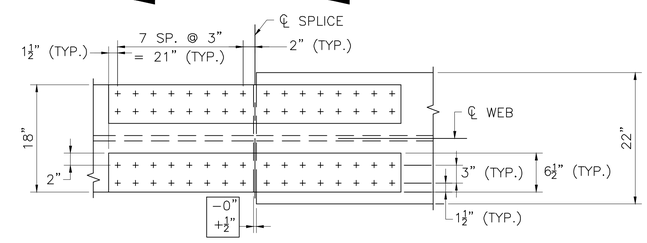

BOTTOM FLANGE

NOTES:

1. BOLTED FIELD SPLICES SHALL BE CONSIDERED SLIP-CRITICAL CONNECTIONS WITH CLASS C FAYING SURFACES.
2. + DENOTES 7/8" ø AASHTO M 164 HIGH STRENGTH BOLT IN 15/16" ø HOLE.
3. ONE ROW OF STUD SHEAR CONNECTORS SHALL BE PLACED ALONG THE CENTERLINE OF THE TOP FLANGE SPLICE PLATE.

BOLTED FIELD SPLICE DETAILS

SCALE: 1" = 1'-0"

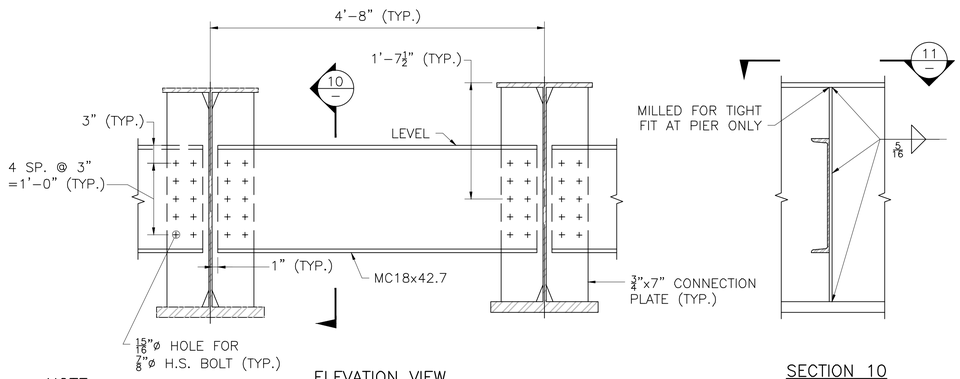

NOTE:

SEE CLIP DETAIL ON THIS SHEET.

ELEVATION VIEW

SECTION 10

INTERMEDIATE DIAPHRAGM DETAIL – D2

SCALE: 1" = 1'-0"

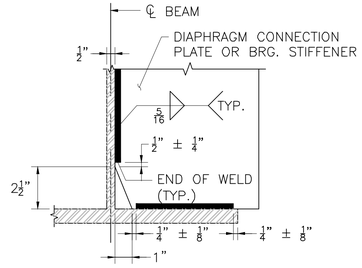

CLIP DETAIL

N.T.S.

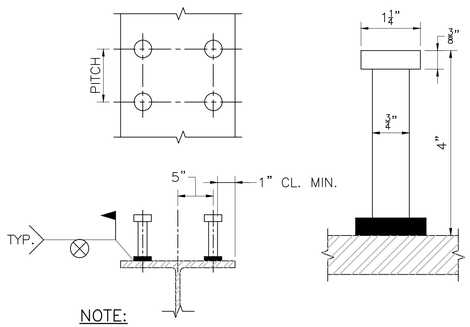

NOTE:

7/8" ø STUDS MAY BE SUBSTITUTED FOR 3/4" ø STUDS BY ADJUSTING THE PITCH TO PROVIDE AN EQUIVALENT CROSS-SECTIONAL AREA PER FOOT.

STUD SHEAR CONNECTORS

N.T.S.

MONTH DD, YYYY	ISSUED FOR CONSTRUCTION
DATE	DESCRIPTION
USE ONLY PRINTS OF LATEST DATE	

606223_BR(C19039)_19 STRUCTURAL STEEL DETAILS.DWG Plotted on 26-Jun-2018 12:20 PM
First Structural Submittal (S1) 27-June-2018

TOF ELEVATIONS & CAMBER TABLE

GIRDER NO.	TOP OF FORM ELEVATIONS FOR DECK SLAB PRIOR TO PLACEMENT OF CONCRETE — INCREASING STATIONS →								
	℄ BRG. N. ABUT	1/8 PT.	1/4 PT.	3/8 PT.	1/2 PT.	5/8 PT.	3/4 PT.	7/8 PT.	℄ BRG. PIER
1	148.21 ft	149.36 ft	150.35 ft	151.11 ft	151.63 ft	151.92 ft	152.04 ft	152.06 ft	152.03 ft
2	148.55 ft	149.67 ft	150.60 ft	151.31 ft	151.79 ft	152.05 ft	152.16 ft	152.15 ft	152.11 ft
3	148.89 ft	149.96 ft	150.84 ft	151.51 ft	151.95 ft	152.19 ft	152.26 ft	152.24 ft	152.16 ft
4	149.22 ft	150.24 ft	151.08 ft	151.71 ft	152.12 ft	152.32 ft	152.37 ft	152.31 ft	152.21 ft

GIRDER NO.	TOP OF FORM ELEVATIONS FOR DECK SLAB PRIOR TO PLACEMENT OF CONCRETE — INCREASING STATIONS →								
	℄ BRG. PIER	1/8 PT.	1/4 PT.	3/8 PT.	1/2 PT.	5/8 PT.	3/4 PT.	7/8 PT.	℄ BRG. S. ABUT
1	152.03 ft	152.01 ft	151.96 ft	151.85 ft	151.63 ft	151.26 ft	150.72 ft	150.02 ft	149.17 ft
2	152.11 ft	152.06 ft	151.98 ft	151.82 ft	151.55 ft	151.12 ft	150.53 ft	149.77 ft	148.88 ft
3	152.16 ft	152.09 ft	151.97 ft	151.77 ft	151.45 ft	150.97 ft	150.33 ft	149.51 ft	148.56 ft
4	152.21 ft	152.10 ft	151.95 ft	151.70 ft	151.34 ft	150.81 ft	150.11 ft	149.23 ft	148.24 ft

TOP OF FORM ELEVATIONS

NOTES:

1. AFTER THE BEAMS ARE ERECTED BUT BEFORE THE FORMS ARE BUILT, ELEVATIONS ON TOP OF THE FLANGE OF THE BEAMS ARE TO BE OBTAINED AT THE POINTS INDICATED IN THE TABLE. THE DIFFERENCE BETWEEN THE ELEVATIONS OBTAINED AND THOSE SHOWN IN THE TABLE GIVES THE ACTUAL BLOCKING DISTANCE FROM THE TOP OF BEAM TO THE BOTTOM OF THE SLAB AT CENTER LINE OF BEAM.
2. SEE FORM NOTES ON SHEET 22.

CAMBER TABLE (INCHES)												
GIRDER NO.		SPAN NO. 1										
		℄ BRG. N. ABUT	0.1L	0.2L	0.3L	0.4L	0.5L	0.6L	0.7L	0.8L	0.9L	℄ BRG. PIER
1	STEEL DL DEFLECTION	0.00	1.32	2.45	3.24	3.59	3.47	2.94	2.13	1.26	0.48	0.00
	CONC. DL DEFLECTION	0.00	2.67	4.94	6.50	7.16	6.88	5.78	4.15	2.42	0.92	0.00
	S.D.L. DEFLECTION	0.00	0.22	0.40	0.53	0.59	0.58	0.50	0.36	0.22	0.08	0.00
	VERT. CURVE CAMBER	0.00	3.73	6.74	8.90	10.19	10.64	10.22	8.95	6.82	3.84	0.00
	ADDITIONAL CAMBER	0.00	0.00	0.00	0.00	0.00	0.00	0.00	0.00	0.00	0.00	0.00
	TOTAL CAMBER	0.00	7.93	14.53	19.17	21.53	21.56	19.43	15.60	10.72	5.33	0.00
2	STEEL DL DEFLECTION	0.00	1.25	2.29	2.98	3.25	3.11	2.60	1.87	1.09	0.41	0.00
	CONC. DL DEFLECTION	0.00	2.52	4.61	5.98	6.49	6.16	5.11	3.63	2.09	0.79	0.00
	S.D.L. DEFLECTION	0.00	0.20	0.37	0.49	0.53	0.51	0.43	0.31	0.18	0.07	0.00
	VERT. CURVE CAMBER	0.00	3.90	6.94	9.12	10.42	10.86	10.42	9.12	6.95	3.91	0.00
	ADDITIONAL CAMBER	0.00	0.00	0.00	0.00	0.00	0.00	0.00	0.00	0.00	0.00	0.00
	TOTAL CAMBER	0.00	7.87	14.21	18.56	20.70	20.64	18.57	14.94	10.31	5.18	0.00
3	STEEL DL DEFLECTION	0.00	1.16	2.11	2.73	2.97	2.83	2.36	1.68	0.96	0.34	0.00
	CONC. DL DEFLECTION	0.00	2.35	4.25	5.48	5.93	5.60	4.63	3.27	1.85	0.65	0.00
	S.D.L. DEFLECTION	0.00	0.19	0.34	0.44	0.49	0.46	0.39	0.28	0.16	0.06	0.00
	VERT. CURVE CAMBER	0.00	3.97	7.06	9.27	10.59	11.03	10.59	9.26	7.06	3.97	0.00
	ADDITIONAL CAMBER	0.00	0.00	0.00	0.00	0.00	0.00	0.00	0.00	0.00	0.00	0.00
	TOTAL CAMBER	0.00	7.67	13.76	17.92	19.97	19.92	17.97	14.49	10.02	5.02	0.00
4	STEEL DL DEFLECTION	0.00	1.05	1.93	2.51	2.75	2.62	2.18	1.54	0.87	0.30	0.00
	CONC. DL DEFLECTION	0.00	2.13	3.89	5.05	5.49	5.19	4.28	2.99	1.66	0.56	0.00
	S.D.L. DEFLECTION	0.00	0.17	0.31	0.41	0.45	0.43	0.36	0.25	0.14	0.05	0.00
	VERT. CURVE CAMBER	0.00	4.03	7.17	9.40	10.75	11.20	10.75	9.40	7.16	4.03	0.00
	ADDITIONAL CAMBER	0.00	0.00	0.00	0.00	0.00	0.00	0.00	0.00	0.00	0.00	0.00
	TOTAL CAMBER	0.00	7.38	13.30	17.37	19.43	19.44	17.56	14.19	9.83	4.94	0.00

CAMBER TABLE (INCHES)												
GIRDER NO.		SPAN NO. 2										
		℄ BRG. PIER	0.1L	0.2L	0.3L	0.4L	0.5L	0.6L	0.7L	0.8L	0.9L	℄ BRG. S. ABUT
1	STEEL DL DEFLECTION	0.00	-0.06	0.17	0.57	1.01	1.38	1.57	1.52	1.20	0.67	0.00
	CONC. DL DEFLECTION	0.00	-0.12	0.34	1.12	2.01	2.79	3.20	3.11	2.47	1.37	0.00
	S.D.L. DEFLECTION	0.00	-0.01	0.03	0.11	0.18	0.24	0.27	0.26	0.20	0.11	0.00
	VERT. CURVE CAMBER	0.00	3.36	5.97	7.84	8.96	9.33	8.96	7.84	5.97	3.36	0.00
	ADDITIONAL CAMBER	0.00	0.00	0.00	0.00	0.00	0.00	0.00	0.00	0.00	0.00	0.00
	TOTAL CAMBER	0.00	3.18	6.52	9.63	12.16	13.74	14.00	12.72	9.85	5.51	0.00
2	STEEL DL DEFLECTION	0.00	0.00	0.27	0.68	1.10	1.45	1.60	1.51	1.18	0.65	0.00
	CONC. DL DEFLECTION	0.00	0.00	0.54	1.34	2.21	2.92	3.25	3.09	2.42	1.34	0.00
	S.D.L. DEFLECTION	0.00	0.00	0.05	0.12	0.20	0.25	0.27	0.26	0.20	0.11	0.00
	VERT. CURVE CAMBER	0.00	3.42	6.08	7.98	9.12	9.50	9.12	7.98	6.08	3.42	0.00
	ADDITIONAL CAMBER	0.00	0.00	0.00	0.00	0.00	0.00	0.00	0.00	0.00	0.00	0.00
	TOTAL CAMBER	0.00	3.43	6.94	10.12	12.63	14.12	14.24	12.84	9.89	5.52	0.00
3	STEEL DL DEFLECTION	0.00	0.05	0.35	0.77	1.20	1.53	1.67	1.56	1.22	0.67	0.00
	CONC. DL DEFLECTION	0.00	0.10	0.69	1.53	2.40	3.09	3.39	3.19	2.49	1.37	0.00
	S.D.L. DEFLECTION	0.00	0.01	0.06	0.14	0.21	0.27	0.29	0.26	0.20	0.11	0.00
	VERT. CURVE CAMBER	0.00	3.48	6.19	8.13	9.29	9.67	9.28	8.11	6.17	3.46	0.00
	ADDITIONAL CAMBER	0.00	0.00	0.00	0.00	0.00	0.00	0.00	0.00	0.00	0.00	0.00
	TOTAL CAMBER	0.00	3.64	7.30	10.57	13.11	14.56	14.62	13.13	10.08	5.61	0.00
4	STEEL DL DEFLECTION	0.00	0.10	0.44	0.89	1.34	1.67	1.79	1.66	1.28	0.70	0.00
	CONC. DL DEFLECTION	0.00	0.19	0.86	1.75	2.66	3.36	3.63	3.39	2.63	1.44	0.00
	S.D.L. DEFLECTION	0.00	0.02	0.08	0.16	0.24	0.29	0.31	0.28	0.21	0.12	0.00
	VERT. CURVE CAMBER	0.00	3.52	6.26	8.21	9.36	9.72	9.30	8.08	6.08	3.28	0.00
	ADDITIONAL CAMBER	0.00	0.00	0.00	0.00	0.00	0.00	0.00	0.00	0.00	0.00	0.00
	TOTAL CAMBER	0.00	3.83	7.64	11.01	13.59	15.04	15.03	13.42	10.20	5.53	0.00

CAMBER TABLE

NOTE:

ALL CAMBER DIMENSIONS ARE INCHES.

DATE	DESCRIPTION
MONTH DD, YYYY	ISSUED FOR CONSTRUCTION

USE ONLY PRINTS OF LATEST DATE

606223_BR(C19039)_20-24 TOF_DECK_BEARING_RAIL.DWG Plotted on 26-Jun-2018 12:20 PM
First Structural Submittal (S1) 27-June-2018

ACTON & CONCORD
BRUCE FREEMAN RAIL TRAIL PHASE 2B

STATE	FED. AID PROJ. NO.	SHEET NO.	TOTAL SHEETS
MA	–	91	146
PROJECT FILE NO. 606223			

DECK SECTION AND DETAILS

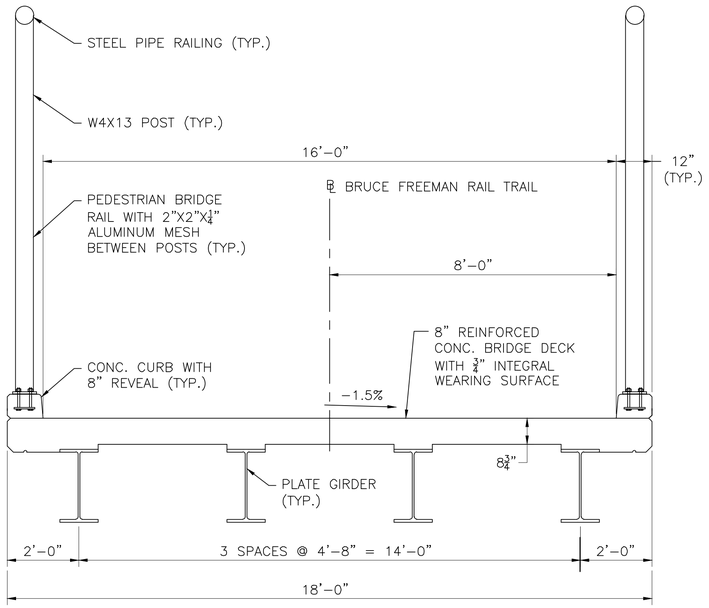

TYPICAL BRIDGE DECK SECTION
SCALE: ½" = 1'–0"

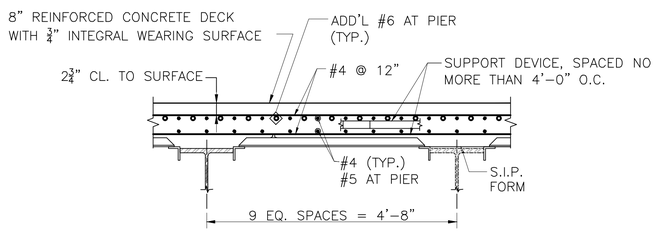

NOTES:

1. ROADWAY DECK SLAB SHALL BE 4000 PSI, ¾ IN, 585 HP CEMENT CONCRETE.
2. LONGITUDINAL REINFORCEMENT SHALL BE PLACED PARALLEL TO THE ℄ OF CONSTRUCTION. TRANSVERSE (PRIMARY) REINFORCEMENT SHALL BE PLACED PERPENDICULAR TO THE ℄ OF CONSTRUCTION.
3. ALL REINFORCEMENT AND SUPPORT DEVICES SHALL BE COATED.
4. BRIDGE DECK SHALL BE GROOVED TRANSVERSELY USING MULTI–BLADE SELF–PROPELLED SAWCUTTING EQUIPMENT.

TYPICAL DECK REINFORCEMENT
SCALE: ¾" = 1'–0"

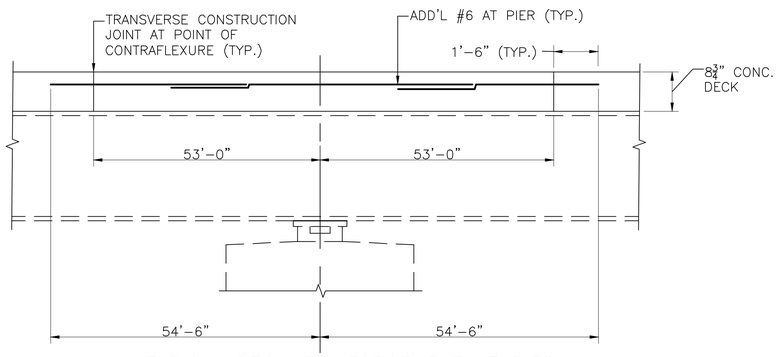

TYPICAL DECK REINFORCEMENT AT PIER
NOT TO SCALE

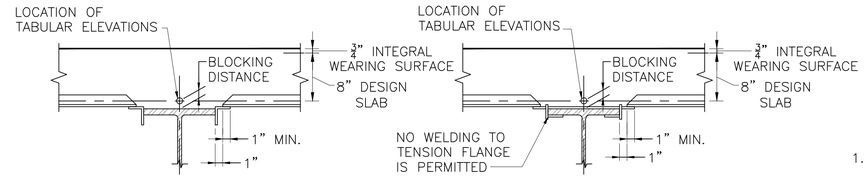

HAUNCH DETAIL AT NON–TENSION FLANGE AREA

HAUNCH DETAIL AT TENSION FLANGE AREA

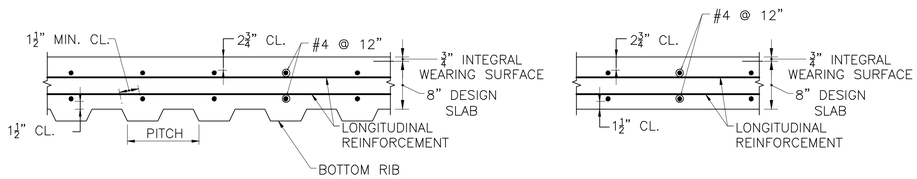

STAY–IN–PLACE FORM

FORM DETAILS
NOT TO SCALE

REMOVABLE FORM

FORM NOTES:

1. SET TOP OF FORMS AT ELEVATIONS GIVEN IN TABLE.
2. FILL THE VALLEYS OF THE S.I.P. FORM WITH EXPANDED POLYSTYRENE (EPS).
3. FORM ENDS SHALL BE CRIMPED CLOSED IN A TAPERED MANNER. TAPER THE EPS FILL AND SEPARATE END CLOSURE PIECES WILL NOT BE ALLOWED.
4. SUPPORT ANGLES SHALL BE PLACED IN THE "LEG DOWN" POSITION WHERE POSSIBLE. WHERE "LEG UP" POSITION IS NECESSARY, THE UPPER MOST PORTION OF THE ANGLE SHALL NOT PROJECT MORE THAN 1" ABOVE THE TOP FLANGE. THE CONTRACTOR SHALL HAVE AN ASSORTMENT OF ANGLES OF VARIOUS SIZES AVAILABLE ON THE SITE TO CONFORM TO THIS REQUIREMENT.
5. CONTRACTOR SHALL DESIGN AND DETAIL ALL ELEMENTS OF THE FORMING SYSTEM AND SHALL SUBMIT TO THE ENGINEER FOR APPROVAL.
6. IN CASES WHERE STANDARD 2" OR 3" DEEP S.I.P FORMS DO NOT SATISFY DESIGN REQUIREMENTS AN ALTERNATIVE FORMING SYSTEM CONSISTING OF DEEPER S.I.P. FORMS OR REMOVABLE FORMS SHALL BE DESIGNED AND DETAILS BY THE CONTRACTOR AND SUBMITTED TO THE ENGINEER FOR APPROVAL. THE DESIGN THICKNESS OF THE SLAB SHALL NOT BE REDUCED.
7. S.I.P. FORMS MAY NOT BE USED WITHIN A DISTANCE OF 4'–0" ON BOTH SIDES OF THE DECK TRANSVERSE CONSTRUCTION JOINTS.

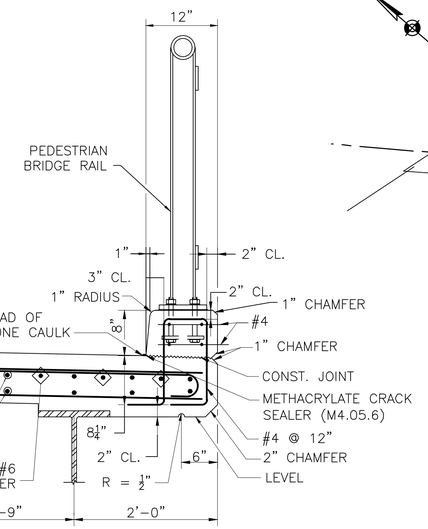

SECTION THRU SAFETY CURB
SCALE: 1" = 1'–0"

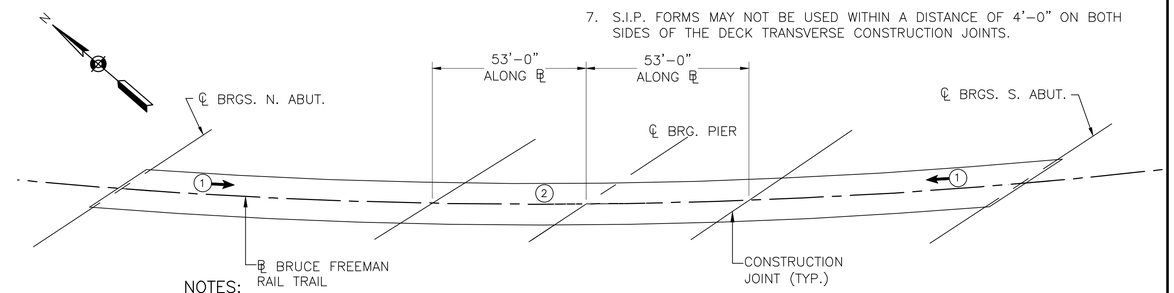

NOTES:

1. INDICATES POSITIVE MOMENT REGION
2. INDICATES NEGATIVE MOMENT REGION
← INDICATES DIRECTION OF PLACEMENT

DECK PLACEMENT SEQUENCE
NOT TO SCALE

SAFETY CURB NOTES:

1. METHACRYLATE CRACK SEALER SHALL BE APPLIED AFTER SAFETY CURB CURING PERIOD IS COMPLETE AND IN ACCORDANCE WITH REQUIREMENTS OF MANUFACTURER AND THE STANDARD SPECIFICATIONS.
2. BEFORE SEALING, THE CONCRETE AT THE INTERFACE OF DECK AND CURB SHALL BE SWEPT CLEAN AND BLOWN OFF USING OIL FREE COMPRESSED AIR IMMEDIATELY PRIOR TO APPLYING THE SEALER.
3. APPLY ¼" HIGH BEAD OF SILICONE CAULKING COMPOUND ABOUT ¼" FROM THE FACE OF CURB.
4. METHACRYLATE SHALL THEN BE POURED INTO THE ¼" WIDE GAP BETWEEN THE FACE OF CURB AND THE BEAD OF CAULK.

CONSTRUCTION JOINT NOTES:

1. BRIDGE DECK SLAB SHALL BE PLACED IN ACCORDANCE WITH THE PLACEMENT SEQUENCE SHOWN ON THE PLANS. THE CONTRACTOR MAY PLACE THE ENTIRE DECK IN ONE CONTINUOUS OPERATION WITHOUT CONSTRUCTION JOINTS WITH THE APPROVAL OF THE ENGINEER PROVIDED THAT THE INITIAL SET (Fc = 500 PSI) OF ALL CONCRETE DOES NOT OCCUR UNTIL AFTER THE COMPLETION OF THE PLACEMENT. AN APPROVED RETARDER SHALL BE USED, WHEN NECESSARY, TO RETAIN THE WORKABILITY OF THE CONCRETE. IF MULTIPLE PLACEMENTS ARE MADE, POSITIVE MOMENT REGIONS SHALL BE PLACED PRIOR TO NEGATIVE MOMENT REGIONS AND A MINIMUM OF 72 HOURS SHALL PASS BETWEEN PLACEMENTS.
2. THE SURFACE OF THE PREVIOUSLY CAST CONCRETE SHALL BE BLAST CLEANED, ROUGHENED, WETTED WITH CLEAN WATER, AND THEN FLUSHED WITH A MORTAR COMPOSED OF EQUAL PARTS OF THE CEMENT AND SAND SPECIFIED FOR THE NEW CONCRETE, BEFORE NEW CONCRETE IS PLACED ADJACENT THERETO. NEW CONCRETE SHALL BE PLACED BEFORE MORTAR HAS TAKEN INITIAL SET.
3. IN LIEU OF THE MORTAR, AN EPOXY ADHESIVE SUITABLE FOR BONDING FRESH CONCRETE TO HARDENED CONCRETE FOR LOAD BEARING APPLICATIONS MAY BE USED. THE EPOXY ADHESIVE SHALL CONFORM TO AASHTO M 235 TYPE V AND SHALL BE APPLIED IN ACCORDANCE WITH THE MANUFACTURER'S RECOMMENDATIONS.
4. DOWEL BAR SPLICERS SHALL BE USED WHERE USE OF LAP SPLICES IS NOT FEASIBLE.

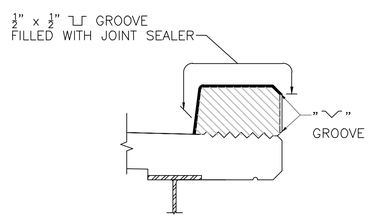

SAFETY CURB NOTES:

1. ALL CONCRETE ABOVE SLAB SHALL BE POURED IN ALTERNATING SECTIONS WITH NOT LESS THAN 3 DAYS BETWEEN POURS.
2. DO NOT CARRY LONGITUDINAL BARS THROUGH THE PARAFFIN JOINTS. END THE REINFORCEMENT 2" CLEAR OF JOINT.
3. JOINT SHALL BE SQUARE TO FACE OF CURB

SAFETY CURB DETAIL
SCALE: ¾" = 1'–0"

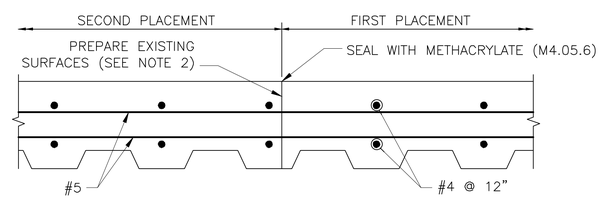

TRANSVERSE CONSTRUCTION JOINT DETAIL IN DECK SLAB
SCALE: 1½" = 1'–0"

DATE	DESCRIPTION
MONTH DD, YYYY	ISSUED FOR CONSTRUCTION
USE ONLY PRINTS OF LATEST DATE	

606223_BRI(C19039)_20-24 TOF_DECK_BEARING_RAIL.DWG Plotted on 26-Jun-2018 12:20 PM
First Structural Submittal (S1) 27-June-2018

STATE	FED. AID PROJ. NO.	SHEET NO.	TOTAL SHEETS
MA	–	92	146
PROJECT FILE NO. 606223			

BEARING DETAILS

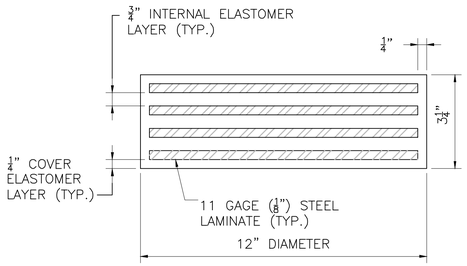

TYPICAL ELASTOMERIC BEARING PAD AT ABUTMENTS

NOT TO SCALE

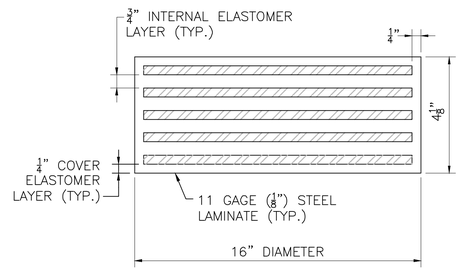

TYPICAL ELASTOMERIC BEARING PAD AT PIER

NOT TO SCALE

NOTES:

1. ELASTOMER SHALL HAVE A HARDNESS OF 60 DUROMETER.
2. STEEL LAMINATES SHALL CONFORM TO ASTM A 1011 GRADE 36.
3. THE COMPRESSIVE DESIGN LOAD ON THE BEARING PAD LOCATED AT THE ABUTMENTS IS 121.30 KIPS. THE COMPRESSIVE DESIGN STRESS IS THE RESULT OF DIVIDING THE COMPRESSIVE DESIGN LOAD BY THE AREA OF THE PAD AND IS EQUAL TO 1.073 KSI.
4. THE COMPRESSIVE DESIGN LOAD ON THE BEARING PAD LOCATED AT THE PIER IS 285.04 KIPS. THE COMPRESSIVE DESIGN STRESS IS THE RESULT OF DIVIDING THE COMPRESSIVE DESIGN LOAD BY THE AREA OF THE PAD AND IS EQUAL TO 1.418 KSI.
5. ELASTOMERIC BEARING PAD SHALL NOT BE VULCANIZED TO THE SOLE PLATE.

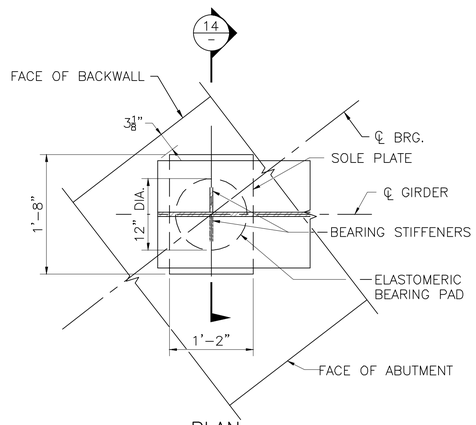

PLAN

SCALE: 1" = 1'-0"

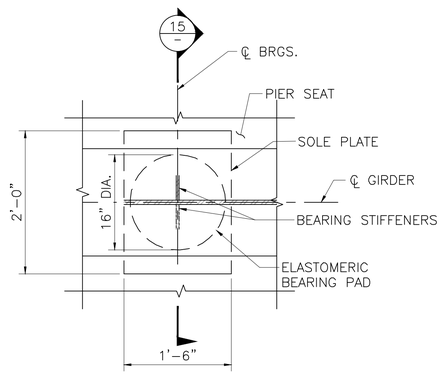

PLAN

SCALE: 1" = 1'-0"

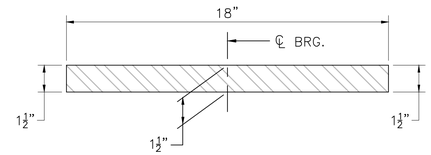

TYPICAL SOLE PLATE DETAIL AT PIER

SCALE: 3" = 1'-0"

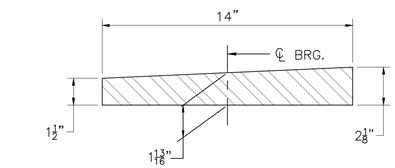

TYPICAL SOLE PLATE DETAIL AT ABUTMENTS

SCALE: 3" = 1'-0"

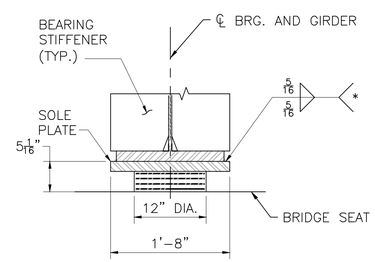

(*) – WELDS SHALL TERMINATE 1/4" FROM EDGE OF PLATE.

SECTION 14

SCALE: 1" = 1'-0"

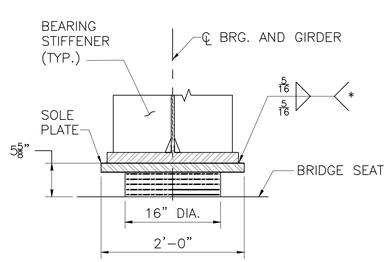

(*) – WELDS SHALL TERMINATE 1/4" FROM EDGE OF PLATE.

SECTION 15

SCALE: 1" = 1'-0"

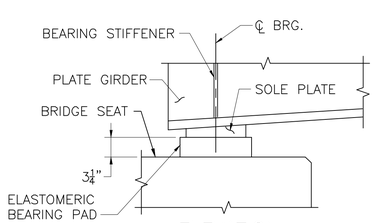

ELEVATION

SCALE: 1" = 1'-0"

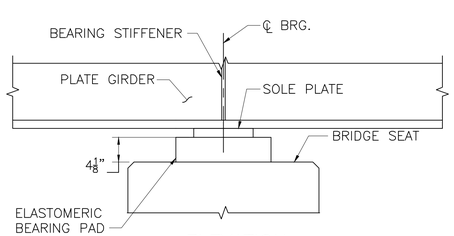

ELEVATION

SCALE: 1" = 1'-0"

BEARING NOTES:

1. STEEL SOLE PLATE SHALL CONFORM TO AASHTO M 270 GRADE 36 AND SHALL BE HOT-DIP GALVANIZED.
2. CENTER THE ELASTOMERIC PAD UNDER THE SOLE PLATE DURING BEAM ERECTION.
3. BEAMS SHALL BE ERECTED WHEN THE AMBIENT TEMPERATURE IS BETWEEN 50 °F AND 77 °F. IF BEAMS ARE ERECTED AT OTHER AMBIENT TEMPERATURES, THEY WILL HAVE TO BE JACKED AND THE ELASTOMERIC BEARINGS RECENTERED WHEN THE TEMPERATURE RETURNS TO THAT RANGE.

MONTH DD, YYYY	ISSUED FOR CONSTRUCTION
DATE	DESCRIPTION
USE ONLY PRINTS OF LATEST DATE	

606223_BR(C19039)_20-24 TOF_DECK_BEARING_RAIL.DWG Plotted on 26-Jun-2018 12:20 PM
First Structural Submittal (S1) 27-June-2018

STATE	FED. AID PROJ. NO.	SHEET NO.	TOTAL SHEETS
MA	–	93	146
PROJECT FILE NO. 606223			

RAILING AND PROTECTIVE SCREEN DETAILS

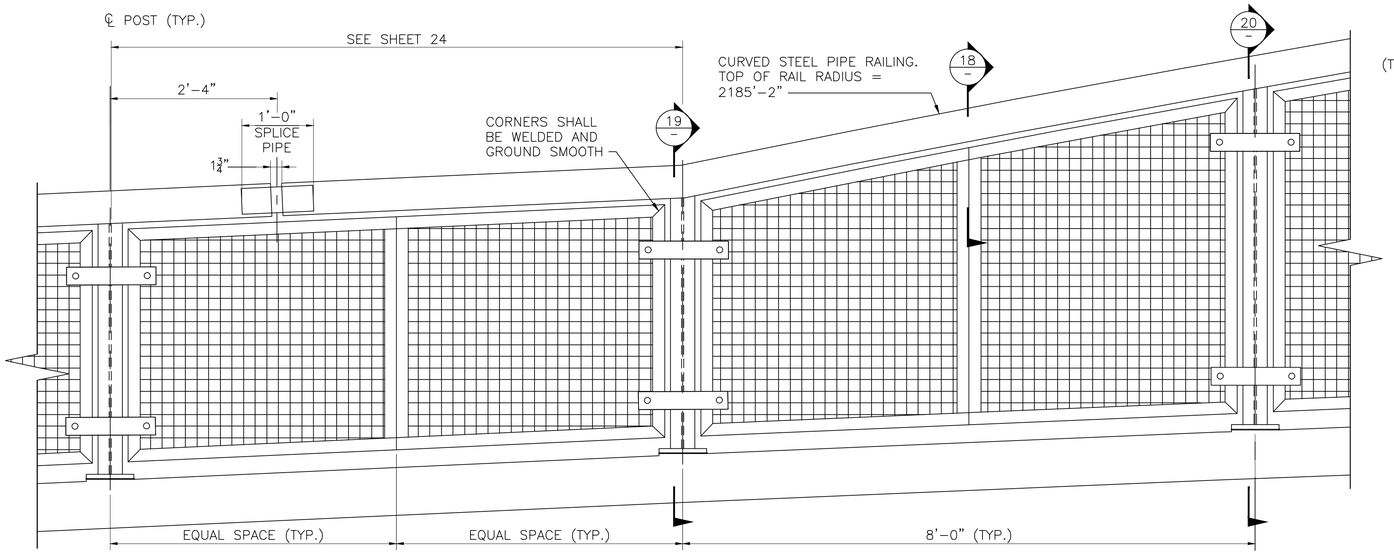

BRIDGE RATING EXTERIOR ELEVATION

SCALE: 1" = 1'–0"

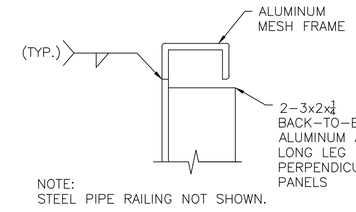

SECTION 18

SCALE: 3" = 1'–0"

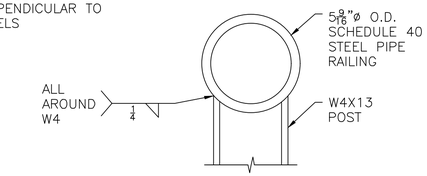

DETAIL A

SCALE: 3" = 1'–0"

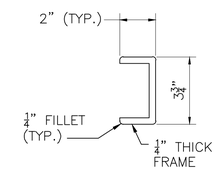

INFILL PANEL FRAME

SCALE: 3" = 1'–0"

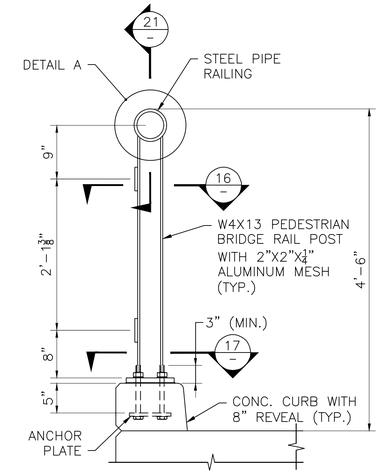

SECTION 19

SCALE: 1" = 1'–0"

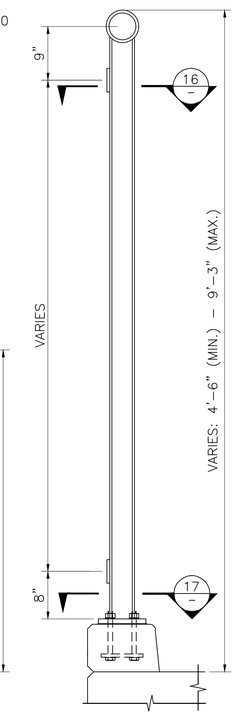

SECTION 20

SCALE: 1" = 1'–0"

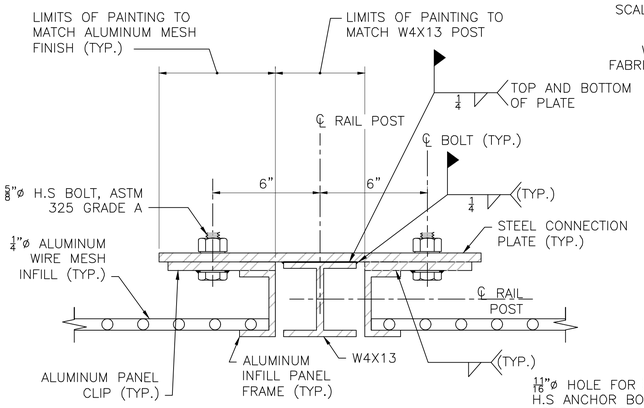

SECTION 16

SCALE: 3" = 1'–0"

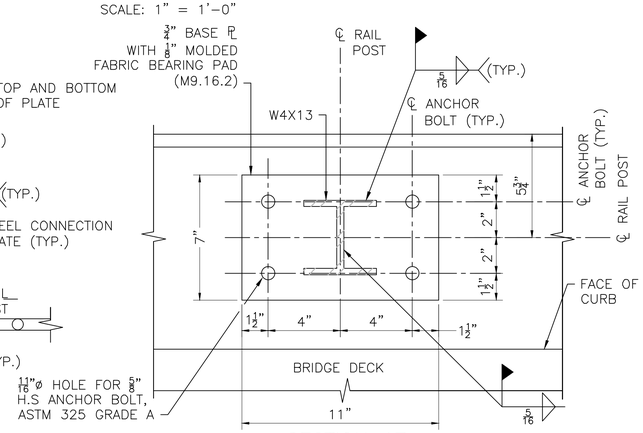

SECTION 17

SCALE: 3" = 1'–0"

RAILING NOTES:

1. RAIL POST AND BASE PLATES SHALL CONFORM TO THE REQUIREMENTS OF AASHTO M 270 GRADE 50. PIPE RAILING SHALL CONFORM TO THE REQUIREMENTS OF ASTM A 500 WITH A CERTIFIED Fy = 50 KSI MINIMUM. PIPE RAILING, ANCHOR PLATES, AND SPLICE PIPE SHALL CONFORM TO THE REQUIREMENTS OF AASHTO M 270 GRADE 36.
2. ALL STEEL (EXCEPT FASTENERS) SHALL BE GALVANIZED AND PAINTED (COLOR TO BE DETERMINED BY THE TOWN OF CONCORD). ANCHOR PLATE SHALL BE GALVANIZED ONLY.
3. ANCHOR BOLTS SHALL BE SET WITH TEMPLATES. THE NUT SECURING THE POST BASE PLATE TO THE CONCRETE SHALL BE TIGHTENED TO A SNUG FIT AND GIVEN AN ADDITIONAL 1/8 TURN AFTER STEEL IS IN PLACE.
4. RAILINGS SHALL BE CONTINUOUS OVER A MINIMUM OF FOUR (4) POSTS WITHOUT SPLICES WHERE POSSIBLE. RAILING SHALL HAVE A MAXIMUM 30 FOOT DISTANCE BETWEEN SPLICES. RAILING BETWEEN POSTS SHALL HAVE AN ALLOWABLE HORIZONTAL TOLERANCE OF ¼" FROM THE CENTERLINE OF POSTS.
5. ENDS OF RAILING SECTIONS SHALL BE SAWED. GRIND SMOOTH EXPOSED EDGES. ALL CUT ENDS SHALL BE TRUE AND SMOOTH.
6. ALL POSTS TO BE PLUMB WHEN PROFILE GRADE EXCEEDS 1.5%. FOR PROFILE GRADES LESS THAN 1.5%, POSTS SHALL BE SET PERPENDICULAR TO GRADE.
7. POST WELDS DO NOT REQUIRE MAGNETIC PARTICLE TESTING.
8. ALUMINUM: PROVIDE ALLOY AND TEMPER RECOMMENDED BY ALUMINUM PRODUCER AND FINISHER FOR TYPE OF USE AND FINISH INDICATED, AND WITH NOT LESS THAN THE STRENGTH AND DURABILITY PROPERTIES OF THE ALLOY AND TEMPER DESIGNATED BELOW FOR EACH ALUMINUM FORM REQUIRED:
   8.a. EXTRUDED BARS AND TUBE: ASTM B 221, ALLOYS 6005–T5, 6061–T6 AND 6063–T6
   8.b. PANEL CLIPS AND STRUCTURAL FASTENERS: ALLOY 6063–T6
9. MESH PANEL: RAILING MANUFACTURER TO PROVIDE ¼ IN. DIAMETER ALUMINUM WIRE WITH 2" SQUARE MESH. PANEL SHALL BE SURROUNDED IN U–CHANNEL AND ANGLE ALUMINUM FRAME. ALL WIRES WELDED TO FRAME WITHIN CHANNEL AND ANGLE LEGS AND HIDDEN FROM VIEW. BOTTOM CHANNEL OF FRAME SHALL BE OPEN IN ORDER TO ALLOW DRAINAGE OF WATER.
10. ALL ALUMINUM SHALL HAVE AN ANODIZED FINISH, CLASS I PROVIDED IN ACCORDANCE WITH AA–M12–C22–A41.

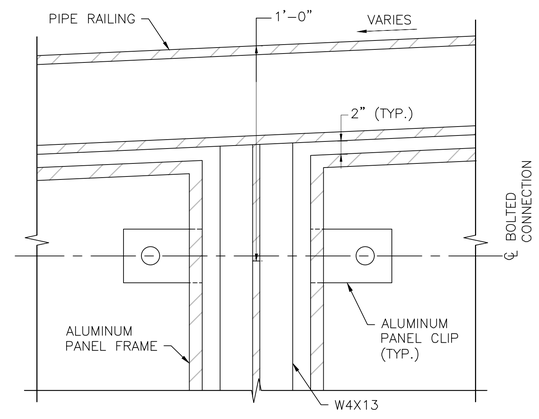

SECTION 21

SCALE: 3" = 1'–0"

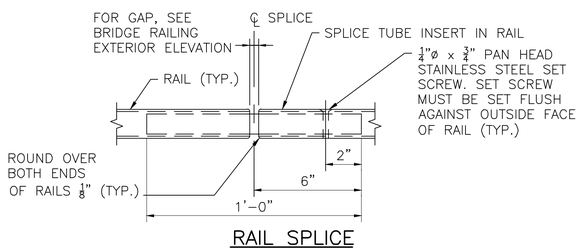

RAIL SPLICE

SCALE: 3" = 1'–0"

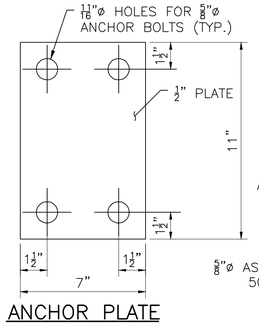

ANCHOR PLATE

SCALE: 3" = 1'–0"

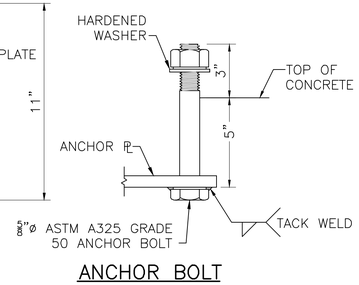

ANCHOR BOLT

SCALE: 3" = 1'–0"

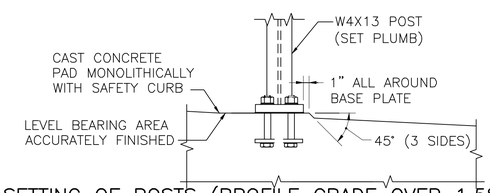

SETTING OF POSTS (PROFILE GRADE OVER 1.5%)

SCALE: 1" = 1'–0"

MONTH DD, YYYY	ISSUED FOR CONSTRUCTION
DATE	DESCRIPTION
USE ONLY PRINTS OF LATEST DATE	

606223_BR(C19039)_20-24 TOF_DECK_BEARING_RAIL.DWG Plotted on 26-Jun-2018 12:20 PM
First Structural Submittal (S1) 27-June-2018

ACTON & CONCORD
BRUCE FREEMAN RAIL TRAIL PHASE 2B

STATE	FED. AID PROJ. NO.	SHEET NO.	TOTAL SHEETS
MA	–	94	146
PROJECT FILE NO. 606223			

TIMBER RAIL TRANSITION

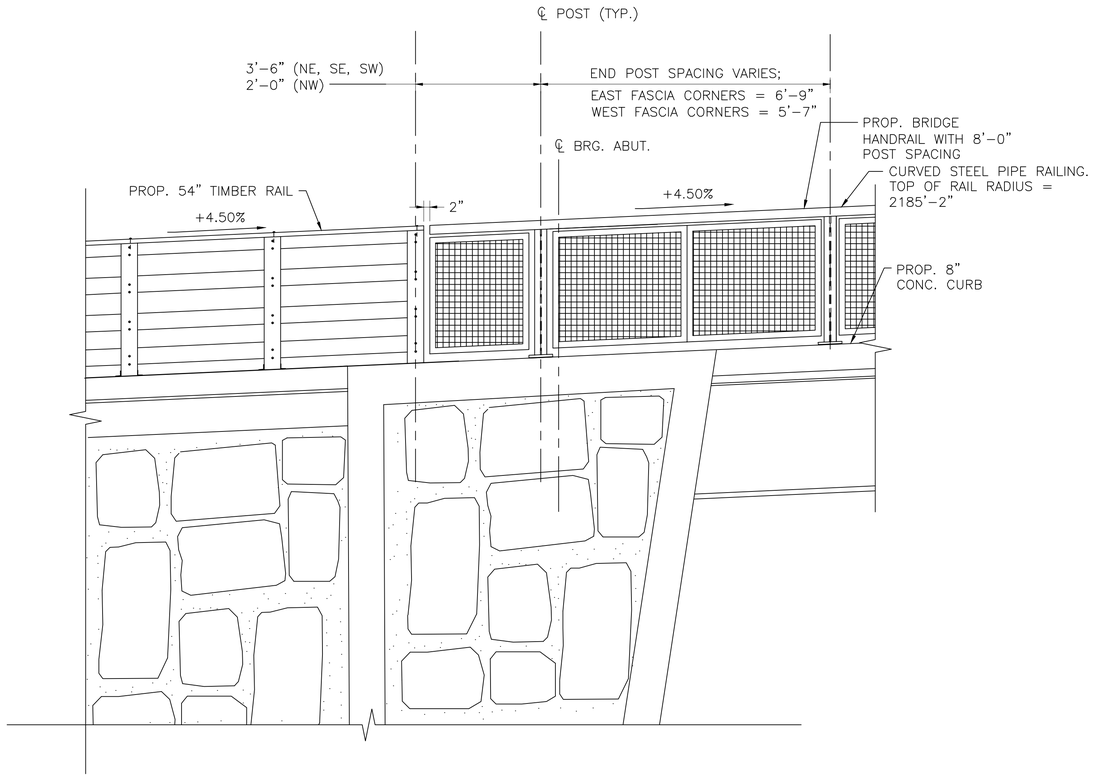

PEDESTRIAN BRIDGE RAIL TO
TIMBER RAIL TRANSITION
SCALE: $\frac{1}{2}$" = 1'–0"

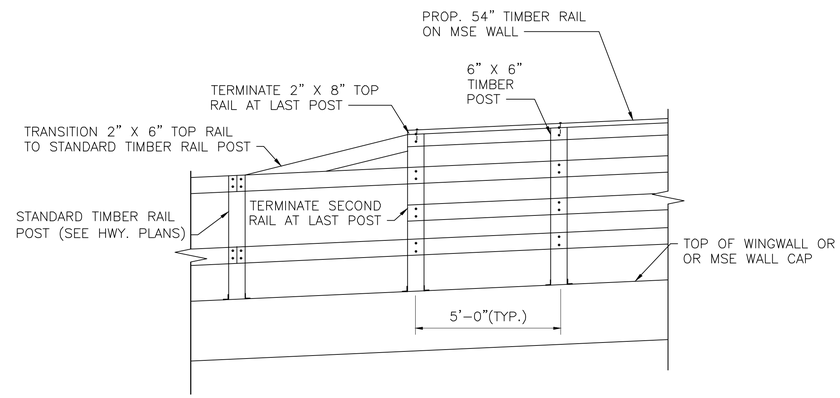

TIMBER RAIL TO
STANDARD TIMBER RAIL TRANSITION
SCALE: $\frac{1}{2}$" = 1'–0"

MONTH DD, YYYY	ISSUED FOR CONSTRUCTION
DATE	DESCRIPTION
USE ONLY PRINTS OF LATEST DATE	

606223_BR(C19039)_20-24 TOF_DECK_BEARING_RAIL.DWG Plotted on 26-Jun-2018 12:20 PM
First Structural Submittal (S1) 27-June-2018

ACTON & CONCORD
BRUCE FREEMAN RAIL TRAIL PHASE 2B

STATE	FED. AID PROJ. NO.	SHEET NO.	TOTAL SHEETS
MA.	–	95	146
PROJECT FILE NO. 606223			

KEY PLAN, LOCUS MAP & PROFILES

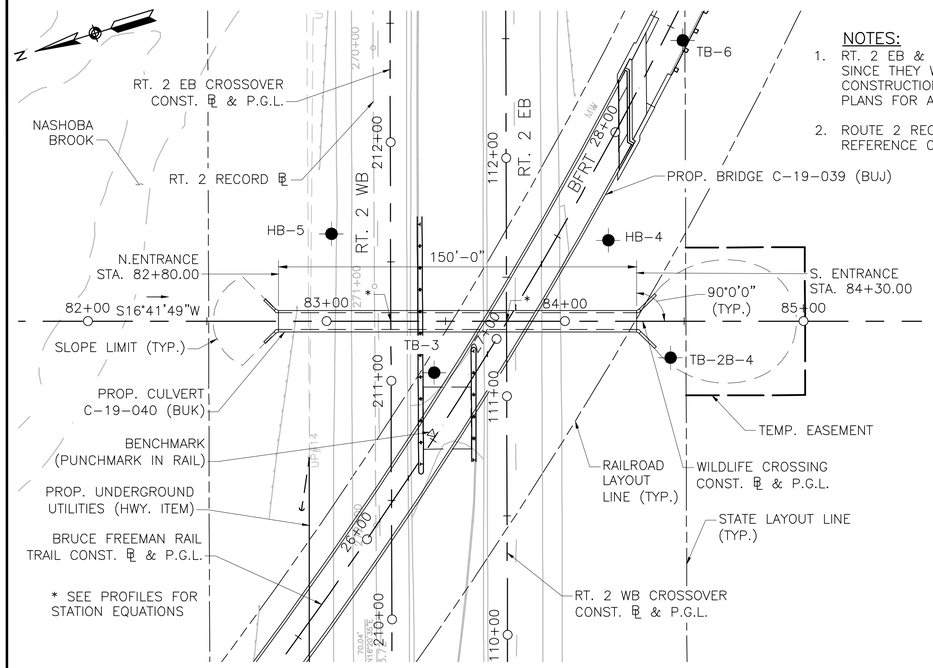

KEY PLAN
SCALE: 1" = 30'

NOTES:

1. RT. 2 EB & WB CROSSOVER BASELINES ARE SHOWN SINCE THEY WILL BE IN PLACE DURING CULVERT CONSTRUCTION. REFER TO CONSTRUCTION STAGING PLANS FOR ADDITIONAL DETAILS.
2. ROUTE 2 RECORD BASELINE IS SHOWN FOR REFERENCE ONLY.

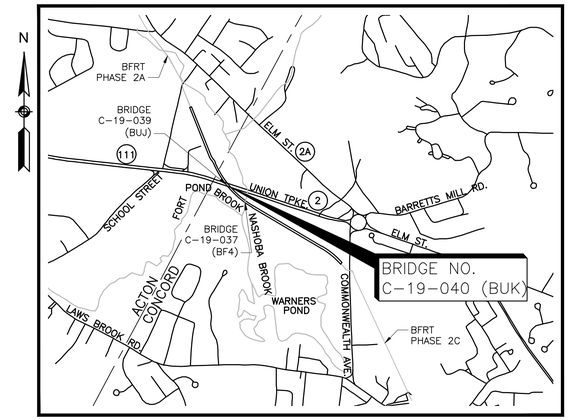

LOCUS
SCALE: 1" = 1500'

INDEX OF BRIDGE SHEETS

1. KEY PLAN, LOCUS MAP & PROFILES
2. GENERAL NOTES & QUANTITIES
3. BORING LOGS
4. BORING LOGS
5. PLAN AND LONGITUDINAL SECTION
6. CULVERT CROSS SECTION, ELEVATION, & DETAILS

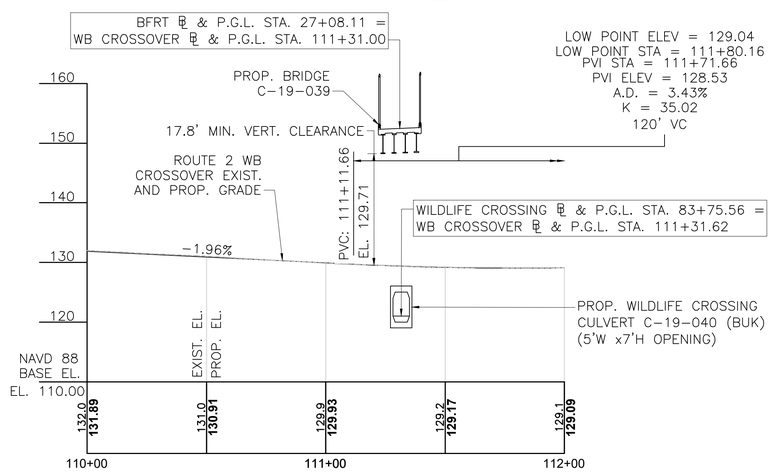

PROFILE ALONG RT. 2 WB CROSSOVER
SCALE: HORZ: 1" = 30'
VERT: 1" = 12'

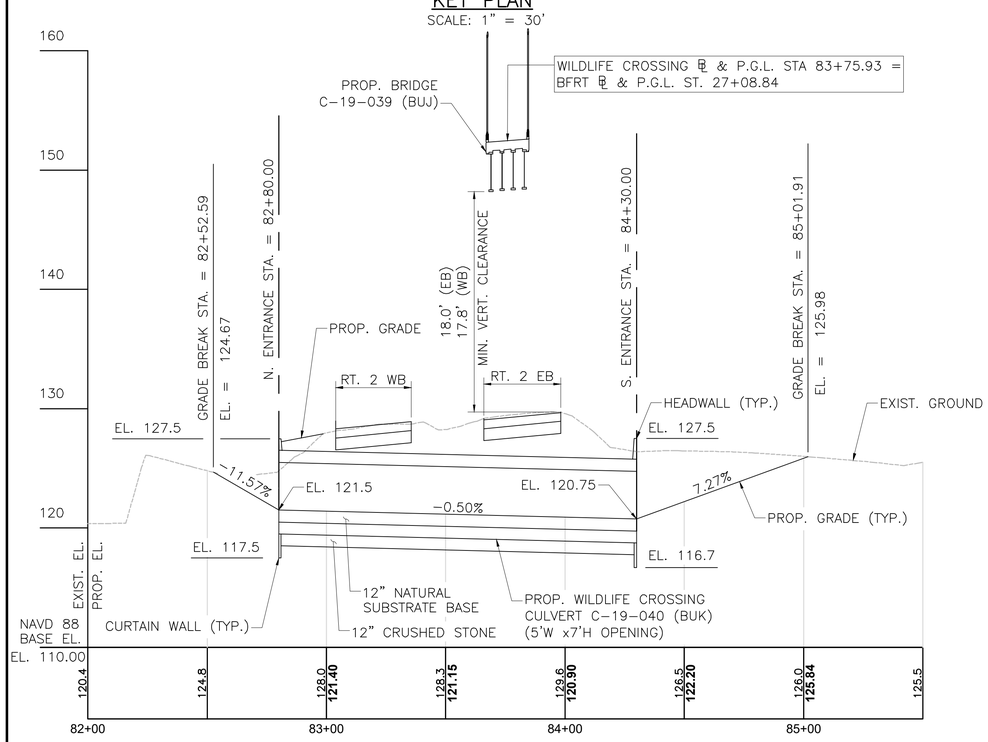

PROFILE ALONG WILDLIFE CROSSING CONST. ℄ & P.G.L.
SCALE: HORZ: 1" = 30'
VERT: 1" = 6'

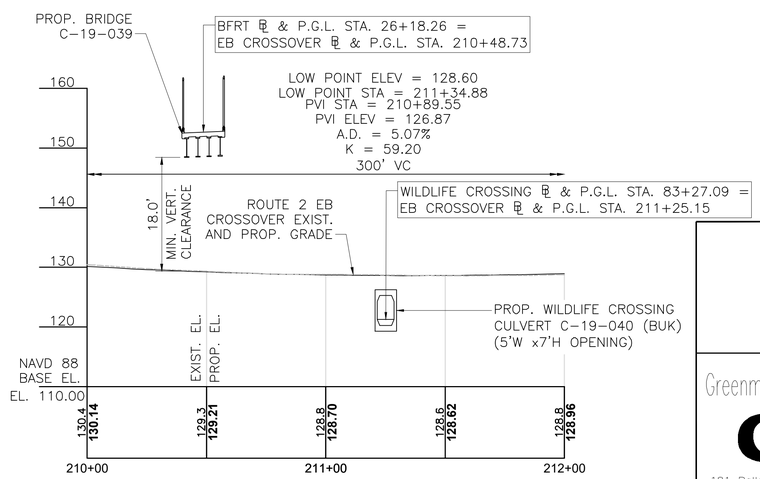

PROFILE ALONG RT. 2 EB CROSSOVER
SCALE: HORZ: 1" = 30'
VERT: 1" = 12'

MONTH DD, YYYY	ISSUED FOR CONSTRUCTION

massDOT Massachusetts Department of Transportation Highway Division

PROPOSED BRIDGE
CONCORD

MA 2 (UNION TURNPIKE)
OVER WILDLIFE CROSSING

MASSACHUSETTS DEPARTMENT OF TRANSPORTATION
HIGHWAY DIVISION
10 PARK PLAZA BOSTON, MASS

Greenman-Pedersen, Inc.
GPI
181 Ballardvale Street, Suite 202
Wilmington, MA 01887

TITLE: CHIEF ENGINEER

SHEET 1 OF 6 SHEETS BRIDGE NO. C-19-040 (BUK)

606223_BR01_02(C19040)-KEYPLAN_NOTES.DWG Plotted on 26-Jun-2018 12:22 PM

First Structural Submittal (S1) 22-Jun-2018

GENERAL NOTES

DESIGN:
IN ACCORDANCE WITH THE 2014 AMERICAN ASSOCIATION OF STATE HIGHWAY AND TRANSPORTATION OFFICIALS (AASHTO) LRFD BRIDGE DESIGN SPECIFICATIONS, 7TH EDITION WITH CURRENT INTERIM SPECIFICATIONS THROUGH 2016 FOR HL–93 LOADING.

MASSDOT BENCH MARK:
PUNCHMARK IN RAIL
N2996046.040 E681142.400
WILDLIFE CROSSING ℄ STA. 83+44.10 47.11' RT
EL. 128.80

ELEVATIONS:
ELEVATIONS ARE BASED ON THE NORTH AMERICAN VERTICAL DATUM (NAVD) OF 1988.

DATE:
TO BE PLACED ON THE OUTSIDE FACES OF BOTH CULVERT HEADWALLS, CENTERED HORIZONTALLY AND VERTICALLY ON THE HEADWALLS. A SHEET SHOWING SIZE AND CHARACTER OF NUMERALS WILL BE FURNISHED. THE DATE USED SHALL BE THE LATEST YEAR OF THE CONTRACT COMPLETION AS OF THE DATE THE CULVERT IS CAST. BOTH HEADWALLS SHALL FEATURE THE SAME DATE.

MASSDOT SURVEY NOTEBOOKS:
COPIES OF ELECTRONIC SURVEY FILES MAY BE OBTAINED FROM MASSDOT.

SCALES:
SCALES NOTED ON THE PLANS ARE NOT APPLICABLE TO REDUCED SIZED PRINTS. DIVIDE SCALES BY 2 FOR HALF–SIZE PRINTS (A3).

FOUNDATIONS:
FOUNDATIONS MAY BE ALTERED, IF NECESSARY, TO SUIT CONDITIONS ENCOUNTERED DURING CONSTRUCTION, WITH THE APPROVAL OF THE ENGINEER.

UNSUITABLE MATERIAL:
ALL UNSUITABLE MATERIAL SHALL BE REMOVED WITHIN THE LIMITS OF THE FOUNDATIONS OF THE STRUCTURE, AS DIRECTED BY THE ENGINEER.

SEISMIC GROUND SHAKING HAZARD:
DESIGN RETURN PERIOD: 1000 YEARS

DESIGN SPECTRA:

$A_S = 0.128$
$S_{DS} = 0.256$
$S_{D1} = 0.096$
SITE CLASS = D

SEISMIC DESIGN CATEGORY (SDC) = A

REINFORCEMENT:
REINFORCING STEEL SHALL CONFORM TO THE REQUIREMENTS OF AASHTO M 31 GRADE 60 (EPOXY COATED). UNLESS OTHERWISE NOTED ON THE CONSTRUCTION DRAWINGS, ALL BARS SHALL BE LAPPED AS FOLLOWS:

MODIFICATION CONDITION	#4 BARS	#5 BARS
1. NONE	21"	26"
2. 12" OF CONCRETE BELOW BAR	29"	36"
3. COATED BARS, COVER < 3db, OR CLEAR SPACING < 6db	31"	39"
4. COATED BARS, ALL OTHER CASES	25"	31"
5. CONDITION 2. AND 3.	35"	44"
6. CONDITION 2. AND 4.	34"	43"

IF THE ABOVE BARS ARE SPACED 6" OR MORE ON CENTER, THE LAP LENGTH SHALL BE 80% OF THE LAP LENGTH GIVEN ABOVE. ALL OTHER BARS SHALL BE LAPPED AS SHOWN ON THE CONSTRUCTION DRAWINGS.

CONCRETE MIXES:

(1)	(2)	(3)	TO BE USED IN CONSTRUCTION OF:
4000	1½	565	WINGWALLS, HEADWALLS, CURTAIN WALLS, CULVERT TO WINGWALL CLOSURE POURS

(1) 28 DAY COMPRESSIVE STRENGTH (PSI)
(2) MAXIMUM AGGREGATE SIZE (INCH)
(3) CEMENTITIOUS CONTENT (POUNDS/C.Y.)

ROUTE 2 STAGED CONSTRUCTION:
STAGED CONSTRUCTION IS REQUIRED FOR CULVERT INSTALLATION BENEATH ROUTE 2. REFER TO SPECIAL PROVISIONS FOR SPECIFIC DETAILS AND RESTRICTIONS PERTINENT TO STAGED CONSTRUCTION AND ROADWAY CLOSURES.

PRECAST BOX CULVERT:
THE CONTRACTOR SHALL SUBMIT DESIGN CALCULATIONS PREPARED IN ACCORDANCE WITH THE 2014 AMERICAN ASSOCIATION OF STATE HIGHWAY AND TRANSPORTATION OFFICIALS LRFD BRIDGE DESIGN SPECIFICATIONS FOR HL–93 LOADING FOR APPROVAL BY THE ENGINEER. THE DESIGN COMPUTATIONS SHALL CONSIDER ALL LOADINGS AS ARE APPROPRIATE DURING FABRICATION, SHIPMENT, ERECTION, CONSTRUCTION, AND IN THE FINAL CONDITION BASED UPON THESE CONSTRUCTION DRAWINGS.

THE DIMENSIONS PROVIDED ARE SHOWN TO ESTABLISH THE SIZE OF THE PROPOSED OPENING. THE WIDTH AND THICKNESS OF THE PROPOSED UNITS MAY VARY DEPENDING UPON THE MANUFACTURER'S SPECIFICATIONS, PROVIDED THAT THE OPENING SIZE AND BURIED DEPTH ARE MAINTAINED.

THE BOX OPENING SHALL BE AS SHOWN ON THE PLANS. THE END CULVERT UNITS SHALL BE BEVELED TO PROVIDE A VERTICALLY SQUARE OPENING. THE CONTRACTOR SHALL DETERMINE THE CONFIGURATION OF THE SEGMENTS OF THE PRECAST CULVERT AS LONG AS THE LIMITS OF THE CULVERT REMAIN IN THE LOCATION SHOWN ON THE PLANS. ANY MODIFICATIONS TO THE GEOMETRY WILL REQUIRE APPROVAL FROM THE ENGINEER PRIOR TO FABRICATION.

THE CONTRACTOR SHALL SUBMIT FOR APPROVAL A COMPLETE DESIGN OF THE BOX CULVERT UNITS BASED ON THE ASSUMED GEOMETRY SHOWN. THE FACTORED BEARING RESISTANCE IS 9.1 KSF WHICH IS A PRODUCT OF THE NOMINAL BEARING RESISTANCE AND A RESISTANCE FACTOR OF 0.45, AS OUTLINED IN THE GEOTECHNICAL REPORT.

THE MINIMUM 28 DAY CONCRETE COMPRESSIVE STRENGTH FOR THE PRECAST BOX CULVERT UNITS SHALL BE 5000 PSI. A MASSDOT PRE–APPROVED CONCRETE MIX SHALL BE USED.

ALL SHOP DRAWINGS AND DESIGN CALCULATIONS SHALL BE STAMPED BY A MASSACHUSETTS REGISTERED PROFESSIONAL ENGINEER.

REFER TO ITEM 995.011 OF THE SPECIAL PROVISIONS FOR FURTHER REQUIREMENTS AND CLARIFICATIONS.

UTILITIES:
THE CONTRACTOR SHALL LOCATE AND PROTECT FROM DAMAGE ALL EXISTING UTILITIES.

ESTIMATED QUANTITIES
(NOT GUARANTEED)

ITEM DESCRIPTION	QUANTITY	UNIT
BRIDGE EXCAVATION	680	CY
GRAVEL BORROW FOR BACKFILLING STRUCTURES AND PIPES	225	CY
CRUSHED STONE FOR BRIDGE FOUNDATIONS	115	TON
CONTROL OF WATER – STRUCTURE NO. C–19–040	1	LS
CULVERT STRUCTURE, CULVERT NO. C–19–040 (BUK)	1	LS

DATE	DESCRIPTION
MONTH DD, YYYY	ISSUED FOR CONSTRUCTION

USE ONLY PRINTS OF LATEST DATE

606223_BR01_02(C19040)-KEYPLAN_NOTES.DWG Plotted on 26-Jun-2018 12:22 PM
First Structural Submittal (S1) DD-Month-2018

BORING LOGS

massDOT Massachusetts Department of Transportation Highway

NEW HAMPSHIRE BORING, INC.
P.O. Box 165
Derry, NH 03038

Phone: (603)437-1610
Fax: (603) 437-0034
E Mail: nhb@nhboring.com

Boring # HB-5
Scale 1" = 5'

City/Town: Concord | Highway Borings | Project File No: 602091 | Contract No: 58183
Project: Route 2 Construction at the Concord Rotary | Date & Time Started: 10-08-09 7:50AM | Total Hours: 4
Groundwater Depth: 9' 6" | Date & Time: 10-08-09 11:30AM | Date & Time Completed: 10-08-09 12:00PM
Coordinates: N 2996062.2 E 681234.6 | Driller's Name: Peter Labossiere | Helper's Name: Jack Lefebvre
Ground Elevation: 130.2' | Inspector's Name: Derek Lee | Inspector's Company: Lamson Engineering, Inc. for AECOM

Sample Number	Depth Range (Feet)	Blow Counts per 6 Inches Coring Times Minute Per Foot	Recovery Inches	Field Description	Strata Changes
S-1	0' - 2'	6 6 7 6	19"	Dry, medium dense, brown, COARSE SAND, some fine sand, trace inorganic silt.	
S-2	4' - 6'	4 3 5 5	18"	Dry, loose, brown, COARSE SAND, some fine sand, trace inorganic silt.	
S-3	9' - 11'	7 3 4 6	10"	Wet, loose, brown, COARSE SAND, trace inorganic silt.	EL. 120.7
					EL. 119.5 ASSUMED BOTTOM OF BASE SLAB AT N. ENTRANCE
S-4	14' - 16'	7 7 8 10	8"	Wet, medium dense, grey, COARSE SAND, some fine sand, trace inorganic silt.	
S-5	19' - 21'	7 8 10 5	12"	Wet, medium dense, grey, COARSE SAND, some fine sand, trace inorganic silt.	
S-6	24' - 26'	11 9 8 9	10"	Wet, medium dense, brown, COARSE SAND, some fine sand, trace inorganic silt.	
					29' EL. 101.2
S-7	29' - 31'	3 4 6 4	14"	Wet, loose, grey, FINE SAND, some inorganic silt.	
S-8	34' - 36'	6 10 5 12	15"	Wet, medium dense, grey, FINE SAND AND INORGANIC SILT.	
					39' EL. 91.2
S-9	39' - 40'8"	34 35 36 84/2"	12"	Wet, very dense, grey, COARSE SAND AND FINE GRAVEL, some fine sand, trace inorganic silt.	
				Top of BEDROCK at 42'.	42' EL. 88.2
C-1	42' - 47'	3 2 1 2 3	32"	Began coring. Hard, white, GRANTINE, some weathering. Percent Recovery= 53%	
				Bottom of Exploration= 47'	47' EL. 83.2

Notes: Changed location, moved boring prior to drilling from 2996067.2, E681234.6 to N2996062.2, E681234.6, boring relocated up hill. Sample by cathead.

Protective Device - Stand: Box:
Well Depth: Solid Pipe:
Stick Up Pipe: Screen Pipe:
Type of Drill Rig: Mobile B-47
Casing Type: HW Size: 4" Hammer Weight: 300Lbs. Fall: 30" Depth: 41' Signs: Cones: Arrow-Board:
Sampler Type: S/S Size: 1 3/8" Automatic Hammer Weight: Safety Hammer Weight: 140Lbs. Donut Hammer Weight: Fall: 30"
Core Barrel Type: NX Size: 2.15"

Penetration Resistance (N) Guide:

Cohesionless Soils (Sands, Gravels) Relative Density	Penetration Resistance	Cohesive Soils (Silts, Clays) Consistency	Penetration Resistance
Very Loose	0 - 4	Very Soft	0 - 2
Loose	4 - 10	Soft	2 - 4
Medium Dense	10 - 30	Medium Stiff	4 - 8
Dense	30 - 50	Stiff	8 - 15
Very Dense	Over 50	Very Stiff	15 - 30
		Hard	Over 30

N=Sum of Second and Third 6" Blow Counts
Terms Used for Second Entry of Descriptions: and = 40-50%, some = 10-40%, trace = 10% or less

BORING HB–5

massDOT Massachusetts Department of Transportation Highway

NEW HAMPSHIRE BORING, INC.
P.O. Box 165
Derry, NH 03038

Phone: (603)437-1610
Fax: (603) 437-0034
E Mail: nhb@nhboring.com

Boring No. TB-3
Scale 1" = 5'

City/Town: Concord | Trail Borings | Project File No: 602091 | Contract No: 58183
Project: Route 2 Construction at the Concord Rotary | Date & Time Started: 10-09-09 7:00AM | Total Hours: 7
Groundwater Depth: 9' | Date & Time: 10-09-09 2:00PM | Date & Time Completed: 10-09-09 2:00PM
Coordinates: N 2996037.7 E 681166.5 | Driller's Name: Peter Labossiere | Helper's Name: Jack Lefebvre
Ground Elevation: 129.0' | Inspector's Name: Derek Lee | Inspector's Company: Lamson Engineering, Inc. for AECOM

Sample Number	Depth Range (Feet)	Blow Counts per 6" Coring Times Minute Per Foot	Recovery (Inches)	Field Description	Strata Changes
S-1	0' - 2'	3 4 3 5	16"	Dry, loose, brown, COARSE SAND ANDFINE SAND, trace organic silt.	
S-2	4' - 6'	14 9 7 7	12"	Wet, medium dense, brown, COARSE SAND, some fine sand, trace inorganic silt.	EL. 119.1 ASSUMED BOTTOM OF BASE SLAB AT MIDPOINT
S-3	9' - 11'	7 5 6 6	8"	Wet, medium dense, brown, COARSE SAND, some fine sand, trace inorganic, silt.	EL. 120.0
					13' EL. 116.0
S-4	14' - 16'	7 7 12 13	12"	Wet, medium dense, grey, COARSE SAND, some fine gravel, trace fine sand.	
S-5	19' - 21'	13 19 8 11	6"	Wet, medium dense, grey, COARSE SAND, some fine gravel, trace fine sand.	
S-6	24' - 26'	16 13 12 6	7"	Wet, medium dense, brown, COARSE SAND, some fine sand, trace inorganic silt.	
S-7	29' - 31'	4 3 3 5	12"	Wet, loose, gray, FINE SAND, some inorganic silt.	
					33' EL. 96.0
S-8	34' - 36'	14 13 15 15	10"	Wet, medium dense, brown, COARSE SAND, some fine sand, trace inorganic silt.	
					37' EL. 92.0
S-9	39' - 40'	70 67	10"	Wet, very dense, gray, FINE SAND AND COARSE SAND, some inorganic silt, (till).	
S-10	44' - 44'6"	120/6"	6"	Wet, very dense, gray, FINE SAND, some inorganic silt, trace coarse sand, (till).	
					49' EL. 80.0
S-11	49' - 49'8"	51 70/2"	8"	Wet, very dense, gray, COARSE SAND, some fine sand, trace inorganic silt, trace bedrock pieces in tip of spoon. Top of BEDROCK at 50'	50' EL. 79.0
				Began coring at 50'.	
C-1	50' - 55'	3 4 4 3 4	39"	Medium hard, highly weathered, highly fractured, gray/brown, SCHIST. Pecent Recovery = 78%	
C-2	55' - 60'	3 3 2 3 3	29"	Medium hard, highly weathered, highly fractured, gray/brown, SCHIST. Percent Recovery = 48%	
					60' EL. 69.0
				Bottom of Exploration = 60'	

Notes: Sample by cathead

Protective Device - Stand: Box:
Well Depth: Solid Pipe:
Stick Up Pipe: Screen Pipe:
Type of Drill Rig: Mobile B-47
Casing Type: HW Size: 4" Hammer Weight: 300Lbs. Fall: 30" Depth: 45' Signs: Cones: 6 Arrow-Board:
Sampler Type: S/S Size: 1 3/8" Automatic Hammer Weight: Safety Hammer Weight: 140Lbs. Donut Hammer Weight: Fall: 30"
Core Barrel Type: NX Size: 2.15"

Penetration Resistance (N) Guide:

Cohesionless Soils (Sands, Gravels) Relative Density	Penetration Resistance	Cohesive Soils (Silts, Clays) Consistency	Penetration Resistance
Very Loose	0 - 4	Very Soft	0 - 2
Loose	4 - 10	Soft	2 - 4
Medium Dense	10 - 30	Medium Stiff	4 - 8
Dense	30 - 50	Stiff	8 - 15
Very Dense	Over 50	Very Stiff	15 - 30
		Hard	Over 30

N=Sum of Second and Third 6" Blow Counts
Terms Used for Second Entry of Descriptions: and = 40-50%, some = 10-40%, trace = 10% or less

BORING TB–3

BORING NOTES:

1. LOCATION OF BORINGS SHOWN ON THE PLAN THUS: TB–2
2. BORINGS ARE TAKEN FOR PURPOSE OF DESIGN AND SHOW CONDITIONS AT BORING POINTS ONLY, BUT DO NOT NECESSARILY SHOW THE NATURE OF THE MATERIALS TO BE ENCOUNTERED DURING CONSTRUCTION.
3. WATER LEVELS SHOWN ON THE BORING LOGS WERE OBSERVED AT THE TIME OF TAKING BORINGS AND DO NOT NECESSARILY SHOW THE TRUE GROUND WATER LEVEL.
4. FIGURES IN COLUMNS INDICATE NUMBER OF BLOWS REQUIRED TO DRIVE A 1 3/8" I.D. SPLIT SPOON SAMPLER 6" USING A 140 POUND WEIGHT FALLING 30".
5. BORING SAMPLES ARE STORED AT A STORAGE FACILITY LOCATED ON ROUTE 114 (219 WINTHROP AVE.) IN LAWRENCE, MA. THE CONTRACTOR MAY EXAMINE THE SOIL AND ROCK SAMPLES BY CONTACTING THE MASSDOT GEOTECHNICAL SECTION AT 10 PARK PLAZA, BOSTON, MA.
6. ALL BORINGS WERE MADE IN OCTOBER 2009 AND NOVEMBER 2014.
7. BORINGS WERE MADE BY NEW HAMPSHIRE BORING, INC. LOCATED AT 1215 WEST CHESTNUT STREET, BROCKTON, MA 02301.
8. THE NORTH AMERICAN VERTICAL DATUM (NAVD) OF 1988 IS USED THROUGHOUT.
9. THE DEPTHS AS SHOWN ON THE ORIGINAL BORING LOGS HAVE BEEN CONVERTED TO ELEVATIONS BY THE ENGINEER.

NOTE:

FOR LOCATION OF BORINGS, SEE SHEET 1.

GROUND WATER INFORMATION

BORING NO.	GROUND SURFACE ELEV. (FT.)	GROUND WATER DEPTH (FT.)	EST. GROUND SURFACE ELEV. (FT.)
HB–5	130.2	9'–6"	120.7
TB–3	129.0	9'–0"	120.0
TB–6	128.2	10'–0"	118.2
HB–4	128.2	11'–0"	117.2
TB–2B–4	126.5	6'–5"	120.1

GROUND WATER:

THE WATER LEVELS RECORDED IN THE TABLE ARE THOSE MEASURED ON THE DATES GIVEN AND DO NOT NECESSARILY REPRESENT GROUND WATER LEVEL AT TIME OF CONSTRUCTION.

BORING LOGS

DATE	DESCRIPTION
MONTH DD, YYYY	ISSUED FOR CONSTRUCTION

USE ONLY PRINTS OF LATEST DATE

606223_BR03_04(C19040)-BORINGS.DWG Plotted on 26-Jun-2018 12:22 PM
First Structural Submittal (S1) DD-Month-YYYY

ACTON & CONCORD
BRUCE FREEMAN RAIL TRAIL PHASE 2B

STATE	FED. AID PROJ. NO.	SHEET NO.	TOTAL SHEETS
MA	–	98	146

PROJECT FILE NO. 606223

BORING LOGS

massDOT Highway

NEW HAMPSHIRE BORING, INC.
P.O. Box 165
Derry, NH 03038
Phone: (603)437-1610
Fax: (603) 437-0034
E Mail: nhb@nhboring.com

Boring No. TB-6
Scale 1" = 5'

City/Town: Concord | Trail Borings | Project File No: 602091 | Contract No: 58183
Project: Route 2 Construction at the Concord Rotary | Date & Time Started: 10-05-09 11:25AM | Total Hours: 4
Groundwater Depth: 10' | Date & Time: 10-06-09 7:00AM | Date & Time Completed: 10-06-09 7:30AM
Coordinates: N 2995897.9 E 681269.9 | Driller's Name: Peter Labossiere | Helper's Name: Jack Lefebvre
Ground Elevation: 128.2' | Inspector's Name: Derek Lee | Inspector's Company: Lamson Engineering, Inc. for AECOM

Sample Number	Depth Range (Feet)	Blow Counts per 6" Coring Times Minute Per Foot	Recovery (Inches)	Field Description	Strata Changes
S-1	0' - 2'	4 6 7 7	6"	Dry, medium dense, brown, COARSE SAND AND FINE SAND, some fine gravel, trace organic silt.	
					4' — EL. 124.2
S-2	4' - 6'	4 2 2 4	16"	Dry, very loose, brown, FINE SAND, some coarse sand, trace inorganic silt.	EL. 118.8 ASSUMED BOTTOM OF BASE SLAB AT S. ENTRANCE
					9' — EL. 119.2
S-3	9' - 11'	12 12 11 9	10"	Wet, medium dense, brown, COARSE SAND, some fine sand, trace inorganic silt.	EL. 118.2
S-4	14' - 16'	13 9 9 11	10"	Wet, medium dense, brown, COARSE SAND, some fine sand, trace inorganic silt.	
S-5	19' - 21'	7 13 8 13	8"	Wet, medium dense, grey, COARSE SAND, some fine sand, trace inorganic silt.	
					24' — EL. 104.2
S-6	24' - 26'	17 11 7 5	12"	Wet, medium dense, grey, COARSE SAND AND FINE SAND, some inorganic silt.	
S-7	29' - 31'	18 8 21 100	8"	Wet, medium dense, grey, COARSE SAND AND FINE SAND, some fine gravel, trace inorganic silt.	
				Top of BEDROCK at 32'.	32' — EL. 96.2
				Began coring.	
C-1	32' - 37"	4 5 14 5 6	54"	Grey, moderately weathered, SCHIST INTO GREY GRANITE. Percent Recovery= 90%	
					37' — EL. 91.2
				Bottom of Exploration = 37'	

Notes: Sample by cathead

Protective Device - Stand: Box:
Well Depth: Solid Pipe:
Stick Up Pipe: Screen Pipe:

Penetration Resistance (N) Guide:

Cohesionless Soils (Sands, Gravels)		Cohesive Soils (Silts, Clays)	
Relative Density	Penetration Resistance	Consistency	Penetration Resistance
Very Loose	0 - 4	Very Soft	0 - 2
Loose	4 - 10	Soft	2 - 4
Medium Dense	10 - 30	Medium Stiff	4 - 8
Dense	30 - 50	Stiff	8 - 15
Very Dense	Over 50	Very Stiff	15 - 30
N=Sum of Second and Third 6" Blow Counts		Hard	Over 30

Type of Drill Rig: Mobile B-47
Casing Type: HW Size: 4" Signs:
Hammer Weight: 300Lbs. Cones:
Fall: 30"
Depth: 30' Arrow-Board:
Sampler Type: S/S Size: 1 3/8"
Automatic Hammer Weight:
Safety Hammer Weight: 140Lbs.
Donut Hammer Weight:
Fall: 30"
Core Barrel Type: NX Size: 2.15"

Terms Used for Second Entry of Descriptions: and = 40-50%, some = 10-40%, trace = 10% or less

BORING TB–6

massDOT Highway

NEW HAMPSHIRE BORING, INC.
P.O. Box 165
Derry, NH 03038
Phone: (603)437-1610
Fax: (603) 437-0034
E Mail: nhb@nhboring.com

Boring # HB-4
Scale 1" = 5'

City/Town: Concord | Highway Borings | Project File No: 602091 | Contract No: 58183
Project: Route 2 Construction at the Concord Rotary | Date & Time Started: 10-02-09 1:15PM | Total Hours:
Groundwater Depth: 11' | Date & Time: 10-05-09 10:30AM | Date & Time Completed: 10-05-09 10:30AM | 5.25
Coordinates: N 2995951.8 E 681198.7 | Driller's Name: Roger Burne | Helper's Name: Patrick Schofield
Ground Elevation: 128.2' | Inspector's Name: Christopher Cheu | Inspector's Company: Lamson Engineering, Inc. for AECOM

Sample Number	Depth Range (Feet)	Blow Counts per 6 Inches Coring Times Minute Per Foot	Recovery Inches	Field Description	Strata Changes
				TOPSOIL * 2"	*
S-1	0' - 2'	4 3 4 5	5"	Dry, loose, brown, FINE TO COARSE SAND, trace fine to medium gravel, trace inorganic silt.	
S-2	4' - 6'	5 5 9 9	12"	Moist, medium dense, light brown, FINE TO COARSE SAND, some inorganic silt.	EL. 118.8 ASSUMED BOTTOM OF BASE SLAB AT S. ENTRANCE
S-3	9' - 11'	5 5 5 5	18"	Wet, medium dense, brown, FINE TO COARSE SAND, trace fine to medium gravel, trace inorganic silt.	EL. 117.2
					14' — EL. 114.2
S-4	14' - 16'	7 9 10 11	15"	Wet, medium dense, grey, FINE TO COARSE SAND AND FINE TO COARSE GRAVEL, trace inorganic silt.	
S-5	19' - 21'	9 11 13 12	18"	Wet, medium dense, brown/ grey, FINE TO COARSE SAND, some fine to coarse gravel, trace inorganic silt.	
					24' — EL. 104.2
S-6	24' - 26'	19 15 9 10	15"	Wet, medium dense, grey, FINE SAND, some inorganic silt, trace clay lenses.	
					28'6" — EL. 99.7
S-7	29' - 31'	29 22 23 27	12"	Wet, dense, brown/ grey, FINE TO COARSE SAND, some fine to coarse gravel, trace inorganic silt.	
S-8	34' - 34'9"	44 120/3"	9"	Wet, very dense, brown/ grey, FINE TO COARSE SAND, some fine to coarse gravel, trace inorganic silt.	34'9" — EL. 93.5
				Encountered BOULDER 34'9" to 35'. * 35'	EL. 93.2
				Advanced Rollerbit to 38'.	
				Top of BEDROCK at 38'.	38' — EL. 90.2
C-1	38' - 43'	4 5 3 4 5	27"	Began coring. Severely fractured, white/ black, GRANITE, trace quartz lenses. Percent Recovery= 45%	
				Bottom of Exploration= 43'	43' — EL. 85.2

Notes: Stopped coring at 5' per order of on-site engineer due to having obtained sufficient information. Well installed at 15'. 4 bags sand/ 1 cement. Sample by cathead.

Protective Device - Stand: Box:
Well Depth: 15' Solid Pipe: 8'
Stick Up Pipe: 3' Screen Pipe: 10'

Penetration Resistance (N) Guide:

Cohesionless Soils (Sands, Gravels)		Cohesive Soils (Silts, Clays)	
Relative Density	Penetration Resistance	Consistency	Penetration Resistance
Very Loose	0 - 4	Very Soft	0 - 2
Loose	4 - 10	Soft	2 - 4
Medium Dense	10 - 30	Medium Stiff	4 - 8
Dense	30 - 50	Stiff	8 - 15
Very Dense	Over 50	Very Stiff	15 - 30
N=Sum of Second and Third 6" Blow Counts		Hard	Over 30

Type of Drill Rig: Diedrich- 50
Casing Type:HW Size:4" Signs:
Hammer Weight: 300Lbs. Cones: 7
Fall: 30"
Depth: 34' Arrow-Board:
Sampler Type: S/S Size: 1 3/8"
Automatic Hammer Weight:
Safety Hammer Weight: 140Lbs.
Donut Hammer Weight:
Fall: 30"
Core Barrel Type: NX Size: 2.15"

Terms Used for Second Entry of Descriptions: and = 40-50%, some = 10-40%, trace = 10% or less

BORING HB–4

massDOT Highway

NEW HAMPSHIRE BORING, INC.
P.O. Box 165
Derry, NH 03038
Phone: (603)437-1610
Fax: (603) 437-0034
E Mail: nhb@nhboring.com

Boring No. TB-2B-4
Scale 1" = 5'

City/Town: Acton - Concord | Bridge: Bruce Freeman Rail Trail (Phase II-B) | Project File No: 606223 | Contract No: 76859
Project: Bruce Freeman Rail Trail Route 2 (Phase II-B) | Date & Time Started: 11-14-14 12:00 pm | Total Hours: 3.5
Groundwater Depth: 6.4' | Date & Time: 11-14-14 3:15 pm | Date & Time Completed: 11-14-14 3:30 pm
Coordinates: N 2995941 E 681144 | Driller's Name: Manlea Thompson | Helper's Name: Donald Palmer
Ground Elevation: 126.5 | Inspector's Name: Weijie Dong | Inspector's Company: Lamson Engineering, Corp., for *

Sample Number	Depth Range (Feet)	Blow Counts per 6 Inches Coring Times Minute Per Foot	Recovery Inches	Field Description	Strata Changes
				TOPSOIL 5"	EL. 126.1
S-1	0' - 2'	2 3 4 4	18"	Moist, loose, red-brown FINE TO COARSE SAND, some inorganic silt, trace fine gravel.	
					4' — EL. 122.5
S-2	5' - 7'	6 4 5 6	14"	Wet, loose, brown FINE TO COARSE SAND, trace fine gravel, trace inorganic silt.	EL. 120.1
					EL. 118.8 ASSUMED BOTTOM OF BASE SLAB AT S. ENTRANCE
S-3	10' - 11'	4 5 14 14	8"	Wet, loose, brown, FINE SAND, trace inorganic silt.	
					11' — EL. 115.5
S-3A	11' - 12'		6"	Wet, medium dense, brown, COARSE TO FINE SAND, trace fine gravel.	
S-4	15' - 17'	9 7 11 13	15"	Wet, medium dense, gray, FINE TO COARSE SAND, some fine to coarse gravel, trace inorganic silt.	
S-5	20' - 22'	8 8 8 8	13"	Wet, medium dense, brown, FINE TO COARSE SAND, some fine to medium gravel, trace inorganic silt.	
S-6	25' - 27'	9 8 8 6	10"	Wet, medium dense, gray, FINE TO COARSE SAND, some fine to coarse gravel, trace inorganic silt.	
S-7	30' - 31'8"	7 7 30 80/2"	9"	Wet, dense, gray, FINE TO COARSE SAND and fine to medium gravel, trace inorganic silt.	
S-8	35' - 37'	28 47 51 54	19"	Wet, very dense, gray, FINE TO COARSE SAND, some inorganic silt, trace fine to medium gravel.	
					37' — EL. 89.5
				Bottom of Exploration = 37'	

Remarks: * AECOM (Consultants)

Protective Device - Stand: Box:
Well Depth: Solid Pipe:
Stick Up Pipe: Screen Pipe:

Penetration Resistance (N) Guide:

Cohesionless Soils (Sands, Gravels)		Cohesive Soils (Silts, Clays)	
Relative Density	Penetration Resistance	Consistency	Penetration Resistance
Very Loose	0 - 4	Very Soft	0 - 2
Loose	4 - 10	Soft	2 - 4
Medium Dense	10 - 30	Medium Stiff	4 - 8
Dense	30 - 50	Stiff	8 - 15
Very Dense	Over 50	Very Stiff	15 - 30
N=Sum of Second and Third 6" Blow Counts		Hard	Over 30

Type of Drill Rig: CME 550X
Arrow-Board: Signs: Cones:
Casing: HW Size: 4" Amt: 35'
Hammer Weight: 300 lbs. Fall: 30"
Sampler Type: S/S Size: 1 3/8"
Automatic Hammer Weight:
Safety Hammer Weight: 140 lbs.
Donut Hammer Weight: Fall: 30"
Core Barrel Type: Size:

Terms Used for Second Entry of Descriptions: and = 40-50%, some = 10-40%, trace = 10% or less

BORING TB–2B–4

BORING LOGS

MONTH DD, YYYY	ISSUED FOR CONSTRUCTION
DATE	DESCRIPTION
USE ONLY PRINTS OF LATEST DATE	

606223_BR03_04(C19040)-BORINGS.DWG Plotted on 28-Jun-2018 12:22 PM
First Structural Submittal (S1) DD-Month-YYYY

ACTON & CONCORD
BRUCE FREEMAN RAIL TRAIL PHASE 2B

STATE	FED. AID PROJ. NO.	SHEET NO.	TOTAL SHEETS
MA	–	99	146
PROJECT FILE NO. 606223			

PLAN AND LONGITUDINAL SECTION

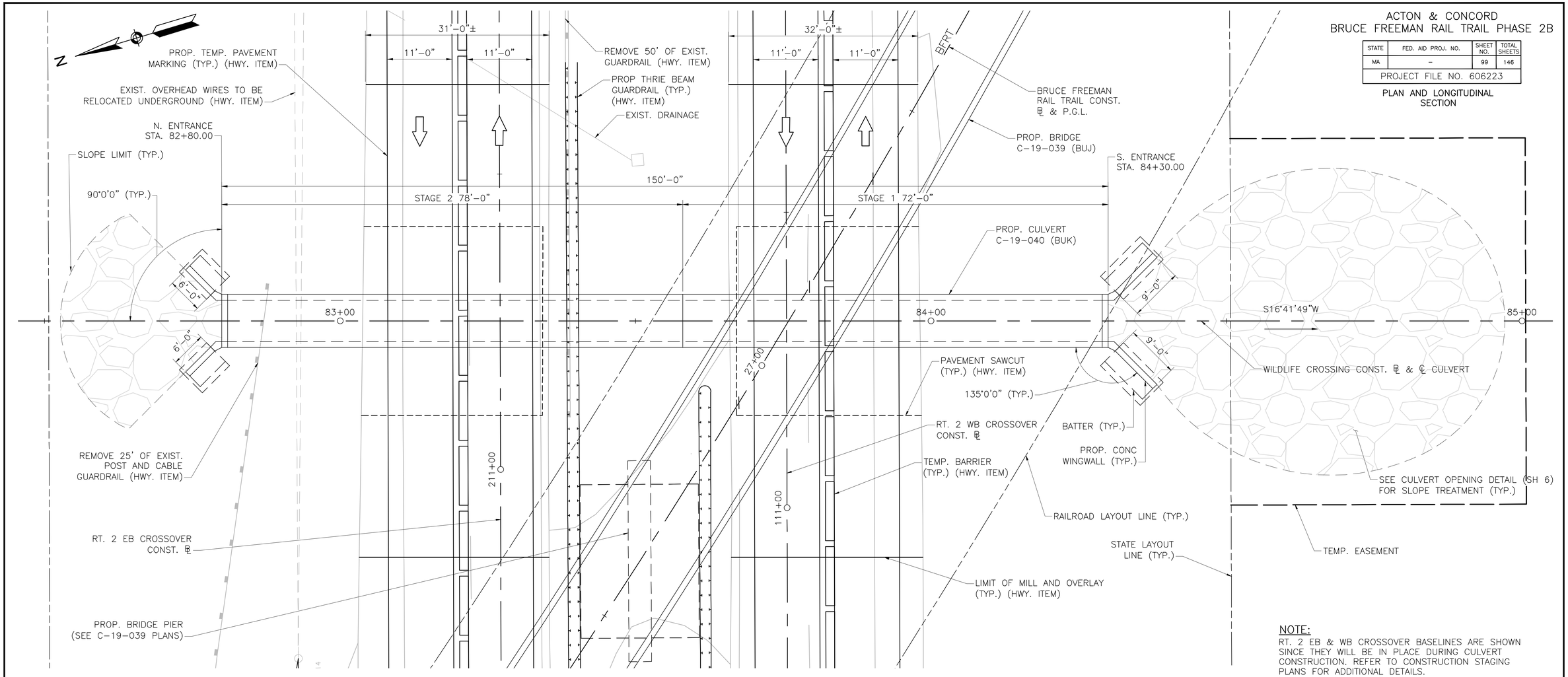

NOTE:
RT. 2 EB & WB CROSSOVER BASELINES ARE SHOWN SINCE THEY WILL BE IN PLACE DURING CULVERT CONSTRUCTION. REFER TO CONSTRUCTION STAGING PLANS FOR ADDITIONAL DETAILS.

PLAN

SCALE: $\frac{1}{8}$" = 1'-0"

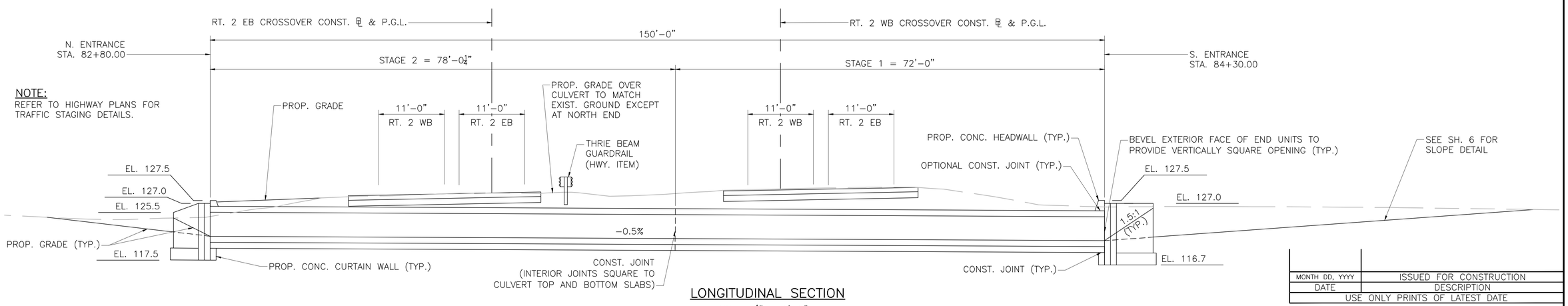

NOTE:
REFER TO HIGHWAY PLANS FOR TRAFFIC STAGING DETAILS.

LONGITUDINAL SECTION

SCALE: $\frac{1}{8}$" = 1'-0"

DATE	DESCRIPTION
MONTH DD, YYYY	ISSUED FOR CONSTRUCTION
USE ONLY PRINTS OF LATEST DATE	

SHEET 5 OF 6 SHEETS BRIDGE NO. C-19-040 (BUK)

606223_BR05(C19040)-PLAN_ELEVATION.DWG Plotted on 26-Jun-2018 12:23 PM

First Structural Submittal (S1) DD-Month-YYYY

ACTON & CONCORD
BRUCE FREEMAN RAIL TRAIL PHASE 2B

STATE	FED. AID PROJ. NO.	SHEET NO.	TOTAL SHEETS
MA	–	100	146
PROJECT FILE NO. 606223			

CULVERT CROSS SECTION, ELEVATION, & DETAILS

WINGWALL NOTES:

1. 4" ø WEEP HOLES (JUST ABOVE FOOTING). PROVIDE 1 WEEP HOLE PER WALL, CENTERED ALONG WALL LENGTH. PROVIDE 1 CUBIC YARD OF CRUSHED STONE AT EACH END OF WEEP HOLE.
2. ALL CONCRETE SHALL BE 4000 PSI, 1 ½ IN, 565 CEMENT CONCRETE.
3. THE FACTORED BEARING PRESSURE = 3.0 KSF AS PER AASHTO LRFD BRIDGE DESIGN SPECIFICATIONS STRENGTH I LOAD COMBINATION.

   FACTORED BEARING RESISTANCE = 3.6 KSF. FACTORED BEARING RESISTANCE IS THE PRODUCT OF THE NOMINAL BEARING RESISTANCE AND A RESISTANCE FACTOR OF 0.55.
4. CRUSHED STONE REQUIRED BEYOND PAYMENT LIMIT SHALL BE CONSIDERED INCIDENTAL TO WATER CONTROL ITEM 991.1.

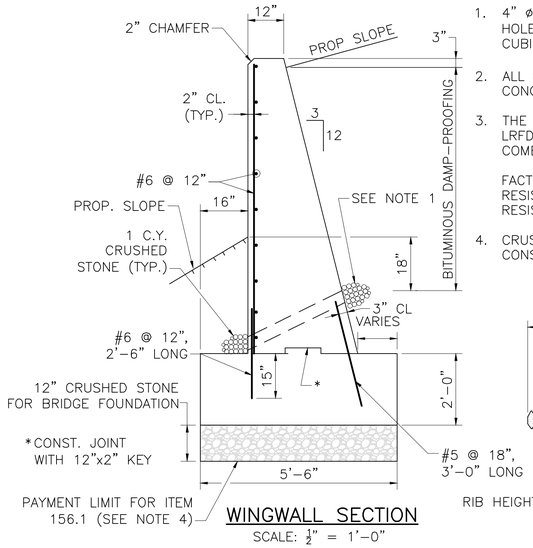

WINGWALL SECTION

SCALE: ½" = 1'-0"

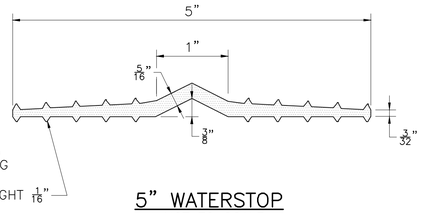

5" WATERSTOP

NOT TO SCALE

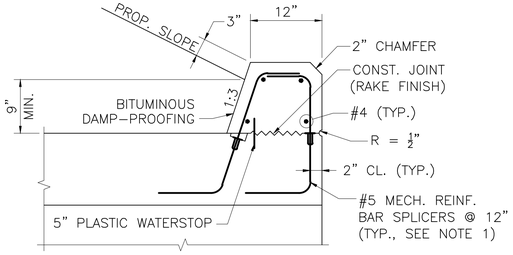

NOTES:

1. THE CONTRACTOR MAY SUBSTITUTE #5 ∫∫ DOWELS, FOR MECHANICAL REINFORCING BAR SPLICERS AND THREADED REBARS.
2. CULVERT REINFORCEMENT IS NOT SHOWN FOR CLARITY.
3. THE CONTRACTOR HAS THE OPTION TO PRECAST THE HEADWALL INTEGRALLY WITH THE CULVERT. IF CAST INTEGRALLY THE 5" WATERSTOP IS NOT REQUIRED.
4. THE PROPOSED SLOPE OVER THE NORTH END OF THE CULVERT PARALLEL TO ROUTE 2 SHALL BE GRADED AT A MAXIMUM SLOPE OF 10H:1V.

CULVERT END DETAIL

SCALE: 1" = 1'-0"

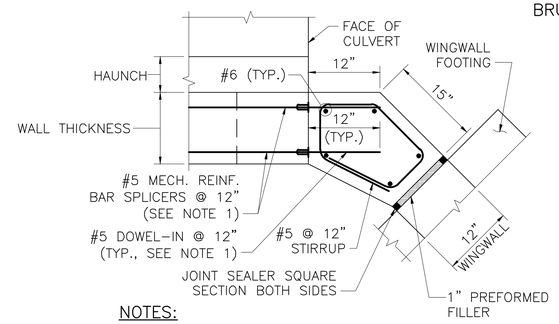

NOTES:

1. THE CONTRACTOR MAY SUBSTITUTE #5 DOWELS, 3'-0" LONG, FOR MECHANICAL REINFORCING BAR SPLICERS AND THREADED REBARS.
2. CULVERT REINFORCEMENT IS NOT SHOWN FOR CLARITY.

SECTION 1

SCALE: 1" = 1'-0"

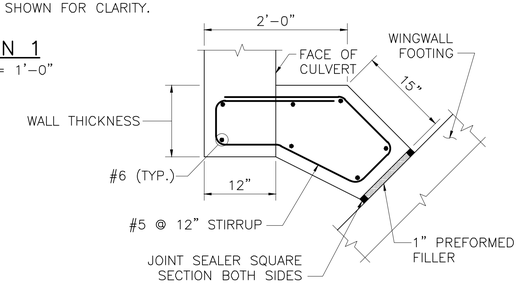

SECTION 2

SCALE: 1" = 1'-0"

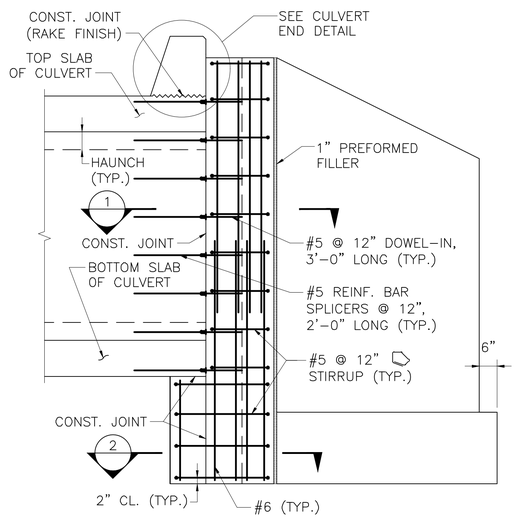

NOTES:

1. THE CONTRACTOR MAY SUBSTITUTE #5 DOWELS, 3'-0" LONG FOR MECHANICAL REINFORCING BAR SPLICERS AND THREADED REBARS.
2. CULVERT REINFORCEMENT IS NOT SHOWN FOR CLARITY.

SECTION AT WINGWALL

SCALE: ½" = 1'-0"

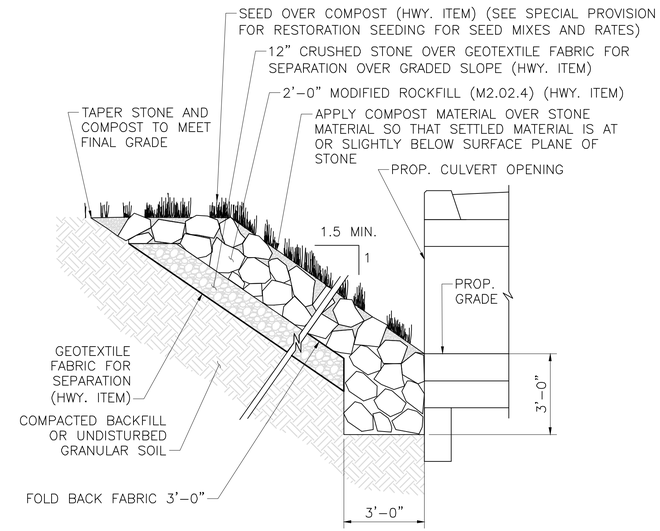

CULVERT OPENING DETAIL

SCALE: ⅜" = 1'-0"

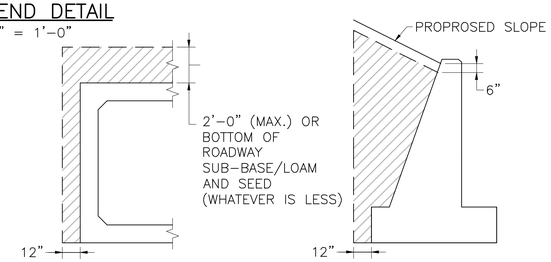

BOX CULVERT WINGWALL

LIMITS OF GRAVEL BORROW FOR BACKFILLING STRUCTURES AND PIPES

SCALE: ¼" = 1'-0"

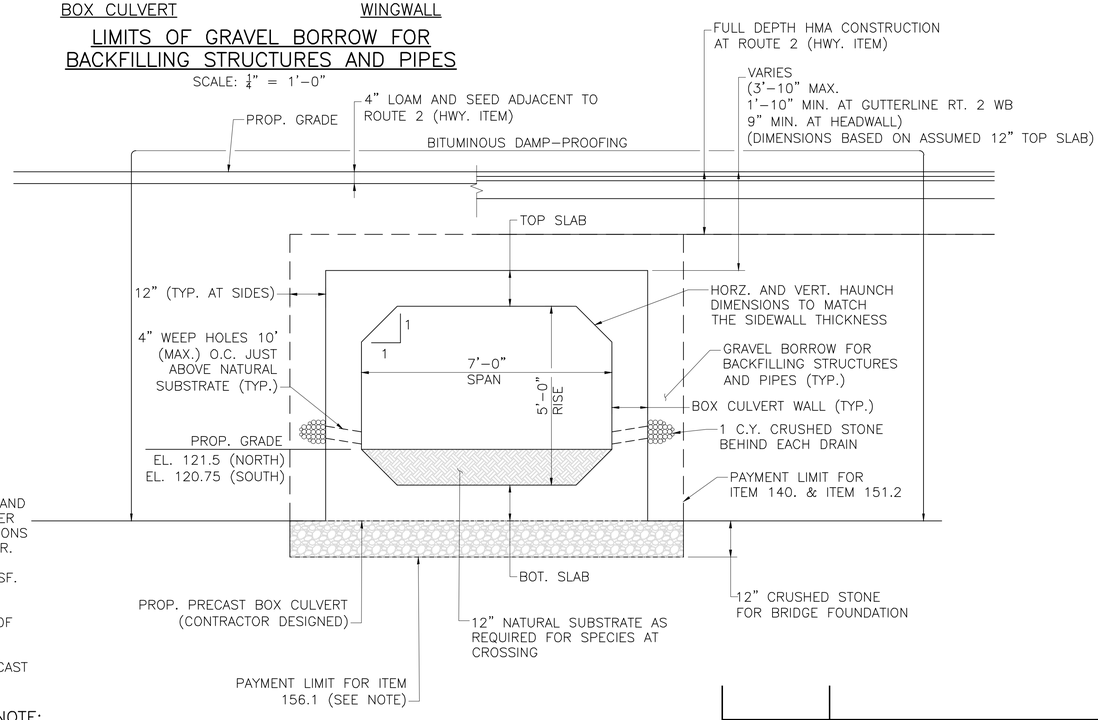

NOTE:

CRUSHED STONE REQUIRED BEYOND PAYMENT LIMIT SHALL BE CONSIDERED INCIDENTAL TO WATER CONTROL ITEM 991.1

BOX CULVERT CROSS SECTION

SCALE: ½" = 1'-0"

NOTE:
SOUTH ELEVATION SIMILAR

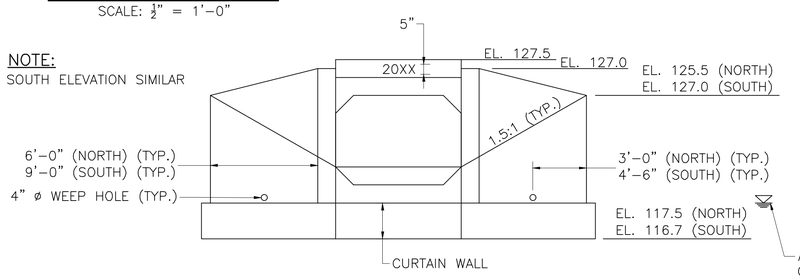

BOX CULVERT NORTH DEVELOPED ELEVATION

SCALE: ¼" = 1'-0"

CULVERT NOTES:

1. THE CULVERT IS CONTRACTOR DESIGNED AND THE FACTORED BEARING PRESSURE AS PER AASHTO LRFD BRIDGE DESIGN SPECIFICATIONS WILL BE DETERMINED BY THE CONTRACTOR.
2. FACTORED BEARING RESISTANCE = 9.1 KSF. FACTORED BEARING RESISTANCE IS THE PRODUCT OF THE NOMINAL BEARING RESISTANCE AND A RESISTANCE FACTOR OF 0.45
3. REFER TO SPECIAL PROVISIONS FOR PRECAST CULVERT JOINT AND JOINT SEALING REQUIREMENTS.

MONTH DD, YYYY	ISSUED FOR CONSTRUCTION
DATE	DESCRIPTION
USE ONLY PRINTS OF LATEST DATE	

606223_BR06(C19040)-DETAILS.DWG Plotted on 26-Jun-2018 12:24 PM
First Structural Submittal (S1) DD-Month-YYYY

ACTON & CONCORD
BRUCE FREEMAN RAIL TRAIL PHASE 2B

STATE	FED. AID PROJ. NO.	SHEET NO.	TOTAL SHEETS
MA	–	101	146
PROJECT FILE NO. 606223			

KEY PLAN, LOCUS MAP & PROFILES

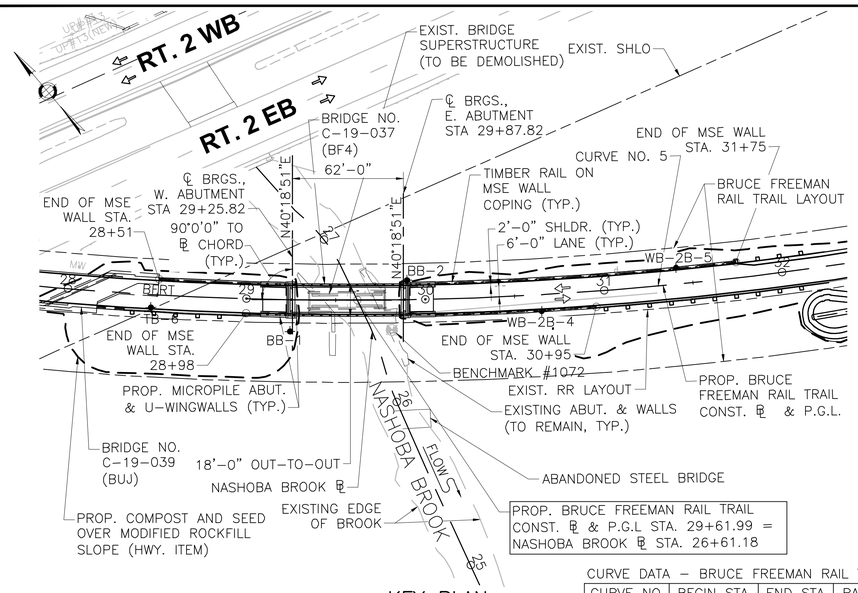

KEY PLAN
SCALE: 1" = 40'

CURVE DATA – BRUCE FREEMAN RAIL TRAIL CONST. ℄ & P.G.L.

CURVE NO.	BEGIN STA.	END STA.	RADIUS	DELTA	LENGTH
5	20+75.83	33+33.96	1900.00'	37°56'23"	1258.13'

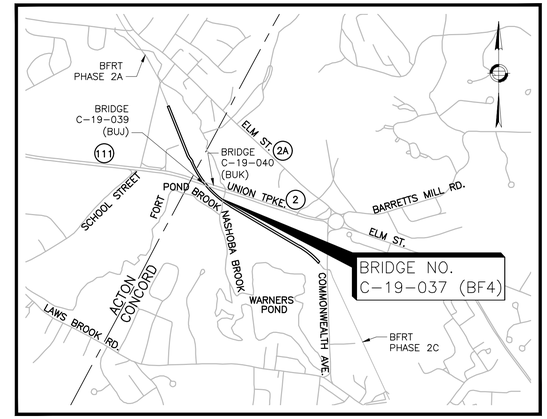

LOCUS
SCALE: 1" = 1500'

INDEX OF BRIDGE SHEETS

1. KEY PLAN, LOCUS MAP & PROFILES
2. GENERAL NOTES & QUANTITIES
3. BORING LOGS
4. PLAN & ELEVATION
5. WEST ABUTMENT PLAN & ELEVATION
6. EAST ABUTMENT PLAN & ELEVATION
7. MSE WALL PLANS & ELEVATIONS
8. ABUTMENT DETAILS (1 OF 2)
9. ABUTMENT DETAILS (2 OF 2)
10. WALL DETAILS
11. APPROACH SLAB PLAN & DETAILS
12. FRAMING PLAN & STRUCTURAL STEEL DETAILS
13. DECK & TIMBER RAILING DETAILS
14. BEARING DETAILS

NOTE:
FOR GENERAL NOTES AND QUANTITIES, SEE SHEET 2.

HYDRAULIC DESIGN DATA:

DRAINAGE AREA:.....20.3 SQUARE MILES
DESIGN FLOOD DISCHARGE:.....845 CUBIC FEET PER SECOND
DESIGN FLOOD FREQUENCY:.....100 YEARS
DESIGN FLOOD VELOCITY:.....3.90 FEET PER SECOND
DESIGN FLOOD ELEVATION:.....123.8 FEET, NAVD

BASE (100-YEAR) FLOOD DATA

BASE FLOOD DISCHARGE:.....845 CUBIC FEET PER SECOND
BASE FLOOD ELEVATION:.....123.8 FEET, NAVD

DESIGN AND CHECK SCOUR DATA

DESIGN SCOUR FLOOD EVENT RETURN FREQUENCY:.....25 YEARS
CHECK SCOUR FLOOD EVENT RETURN FREQUENCY:.....50 YEARS

FLOOD OF RECORD

THERE IS NO FLOOD OF RECORD FOR NASHOBA BROOK.

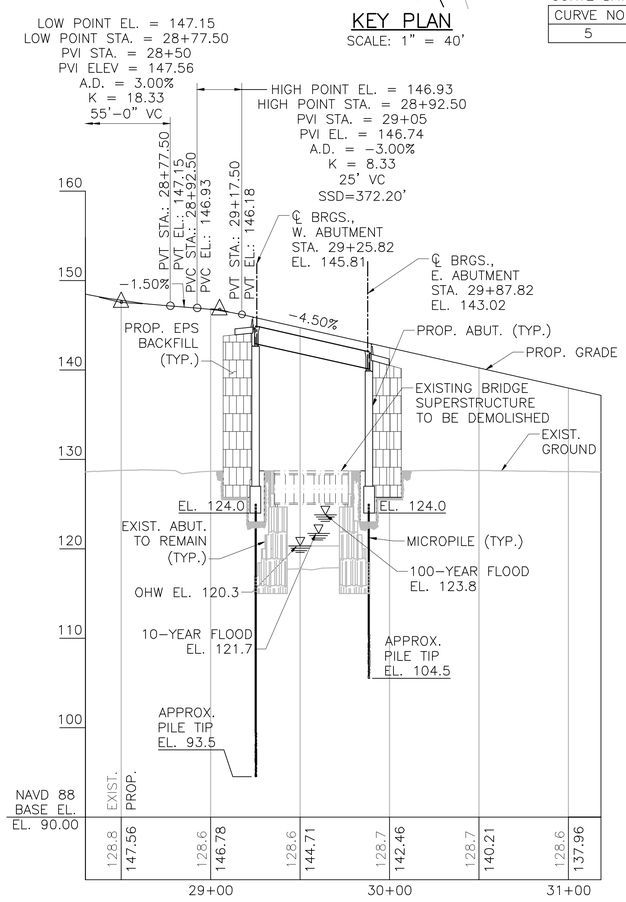

PROFILE ALONG BRUCE FREEMAN RAIL TRAIL CONST. ℄ & P.G.L.
HORIZ. SCALE: 1" = 40'
VERT. SCALE: 1/8" = 1'

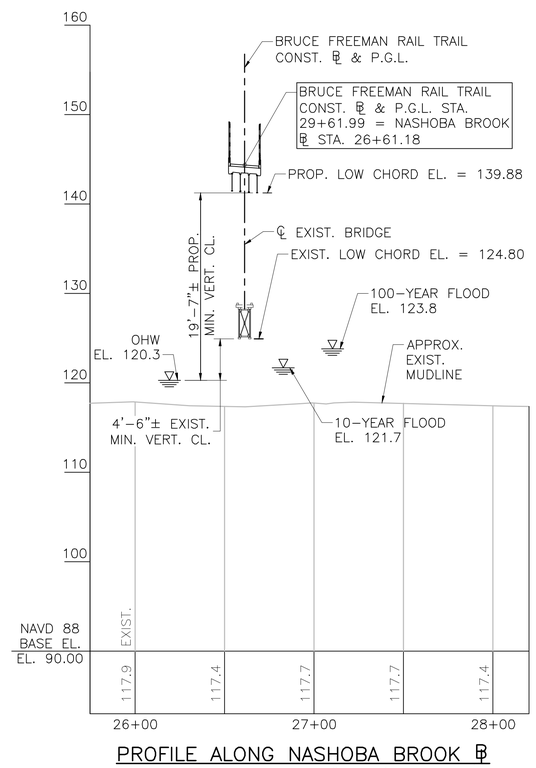

PROFILE ALONG NASHOBA BROOK ℄
HORIZ. SCALE: 1" = 40'
VERT. SCALE: 1/8" = 1'

MONTH DD, YYYY	ISSUED FOR CONSTRUCTION

massDOT Massachusetts Department of Transportation Highway Division

PROPOSED BRIDGE
CONCORD
BRUCE FREEMAN RAIL TRAIL
OVER NASHOBA BROOK
MASSACHUSETTS DEPARTMENT OF TRANSPORTATION
HIGHWAY DIVISION
10 PARK PLAZA BOSTON, MASS

Greenman-Pedersen, Inc.
GPI
181 Ballardvale Street, Suite 202
Wilmington, MA 01887

TITLE: CHIEF ENGINEER

606223_BR01(C19037)-KEYPLANLOCUS.DWG Plotted on 26-Jun-2018 12:25 PM
First Structural Submittal (S1) 22-Jun-2018

GENERAL NOTES

DESIGN:
IN ACCORDANCE WITH THE 2014 AMERICAN ASSOCIATION OF STATE HIGHWAY AND TRANSPORTATION OFFICIALS (AASHTO) LRFD BRIDGE DESIGN SPECIFICATIONS WITH CURRENT INTERIM SPECIFICATIONS THROUGH 2016 AND THE 2009 AASHTO LRFD GUIDE SPECIFICATIONS FOR THE DESIGN OF PEDESTRIAN BRIDGES WITH INTERIM SPECIFICATIONS THROUGH 2015 FOR PEDESTRIAN LOADING OF 90 PSF AND H10 LOADING.

EXISTING BRIDGE PLANS:
PLANS OF THE EXISTING BRIDGE DO NOT EXIST. THE CONTRACTOR SHALL TAKE ALL REQUIRED MEASUREMENTS OF THE EXISTING STRUCTURE TO APPROPRIATELY BID THE DEMOLITION ITEM.

MASSDOT BENCH MARK:
BENCHMARK #1072 IRON PIN
N2995801.24 E681364.41 EL. 124.85 STA. 29+81.08 16.72' RT

ELEVATIONS ARE BASED ON THE NORTH AMERICAN VERTICAL DATUM (NAVD) OF 1988.

MASSDOT SURVEY NOTEBOOKS:
COPIES OF ELECTRONIC SURVEY FILES MAY BE OBTAINED FROM THE MASSACHUSETTS DEPARTMENT OF TRANSPORTATION–HIGHWAY DIVISION.

SCALES:
SCALES NOTED ON THE PLANS ARE NOT APPLICABLE TO REDUCED SIZE PRINTS. DIVIDE SCALES BY 2 FOR HALF–SIZE PRINTS (A3).

FOUNDATIONS:
FOUNDATIONS MAY BE ALTERED, IF NECESSARY, TO SUIT CONDITIONS ENCOUNTERED DURING CONSTRUCTION, WITH THE APPROVAL OF THE ENGINEER.

UNSUITABLE MATERIAL:
ALL UNSUITABLE MATERIAL SHALL BE REMOVED WITHIN THE LIMITS OF THE FOUNDATIONS OF THE STRUCTURE, AS DIRECTED BY THE ENGINEER.

SEISMIC GROUND SHAKING HAZARD:
DESIGN RETURN PERIOD: 2500 YEAR

DESIGN SPECTRA:

AS = 0.128
SDS = 0.256
SD1 = 0.096

SITE CLASS = D

SEISMIC DESIGN CATEGORY (SDC) = A

ANCHOR BOLTS:
ALL ANCHOR BOLTS SHALL BE SET BY TEMPLATE BEFORE THE CONCRETE IS PLACED.

REINFORCEMENT:
REINFORCING STEEL SHALL CONFORM TO THE REQUIREMENTS OF AASHTO M 31 GRADE 60 AND BE EPOXY COATED. UNLESS OTHERWISE NOTED ON THE CONSTRUCTION DRAWINGS, ALL BARS SHALL BE LAPPED AS FOLLOWS:

MODIFICATION CONDITION:	#4 BARS	#5 BARS
1. NONE	21"	26"
2. 12 INCHES OF CONCRETE BELOW BAR	29"	36"
3. COATED BARS, COVER <3db, OR CLEAR SPACING < 6db	31"	39"
4. COATED BARS, ALL OTHER CASES	25"	31"
5. CONDITION 2 AND 3	35"	44"
6. CONDITION 2 AND 4	34"	43"

IF THE ABOVE BARS ARE SPACED 6 INCHES OR MORE ON CENTER, THE LAP LENGTH SHALL BE 80% OF THE LAP LENGTH GIVEN ABOVE. ALL OTHER BARS SHALL BE LAPPED AS SHOWN ON THE CONSTRUCTION DRAWINGS.

CONCRETE MIXES

(1)	(2)	(3)	
4000	$1\frac{1}{2}$"	565	PILE CAPS, ABUTMENT & WINGWALL STEMS, CURTAIN WALLS & APPROACH SLABS
4000	$\frac{3}{4}$"	610	KEEPER BLOCKS & BACKWALLS
4000	$\frac{3}{4}$"	585 HP	DECK, END DIAPHRAGMS & CURBS

(1) 28 DAY COMPRESSIVE STRENGTH (PSI)
(2) MAXIMUM AGGREGATE SIZE (INCH)
(3) CEMENTITIOUS CONTENT (POUNDS/CY)

ESTIMATED QUANTITIES
(NOT GUARANTEED)

ITEM DESCRIPTION	QUANTITY	UNIT
DEMOLITION OF SUPERSTRUCTURE OF BRIDGE NO. C–19–037	1	LS
BRIDGE EXCAVATION	110	CY
GRAVEL BORROW FOR BACKFILLING STRUCTURES AND PIPES	30	CY
SUPERPAVE BRIDGE SURFACE COURSE – 9.5 (SSC–B–9.5)	10	TON
SUPERPAVE BRIDGE PROTECTIVE COURSE – 9.5 (SPC–B–9.5)	10	TON
SAWING & SEALING JOINTS IN ASPHALT PAVEMENT AT BRIDGES	32	FT
DRILLED MICROPILES	380	FT
MICROPILE VERIFICATION LOAD TEST	1	EA
MICROPILE PROOF LOAD TEST	2	EA
BRIDGE STRUCTURE, BRIDGE NO. C–19–037 (BF4)	1	LS
MECHANICALLY STABILIZED EARTH WALL	605	SY
MSE WALL MANUFACTURER'S REPRESENTATIVE	8	DAY
EXPANDED POLYSTYRENE	260	CY
EPS MANUFACTURER'S REPRESENTATIVE	5	DAY

DATE	DESCRIPTION
MONTH DD, YYYY	ISSUED FOR CONSTRUCTION
USE ONLY PRINTS OF LATEST DATE	

606223_BR02(C19037)-GENERAL NOTES.DWG Plotted on 26-Jun-2018 12:25 PM
First Structural Submittal (S1) 22-Jun-2018

BORING LOGS

massDOT Highway

NEW HAMPSHIRE BORING, INC.
P.O. Box 165
Derry, NH 03038

Phone: (603)437-1610
Fax: (603) 437-0034
E Mail: nhb@nhboring.com

Boring No. TB-6
Scale 1" = 5'

City/Town: Concord | Trail Borings | Project File No: 602091 | Contract No: 58183
Project: Route 2 Construction at the Concord Rotary | Date & Time Started: 10-05-09 11:25AM | Total Hours: 4
Groundwater Depth: 10' | Date & Time: 10-06-09 7:00AM | Date & Time Completed: 10-06-09 7:30AM
Coordinates: N 2995897.9 E 681269.9 | Driller's Name: Peter Labossiere | Helper's Name: Jack Lefebvre
Ground Elevation: 128.2' | Inspector's Name: Derek Lee | Inspector's Company: Lamson Engineering, Inc. for AECOM

Sample Number	Depth Range (Feet)	Blow Counts per 6" Coring Times Minute Per Foot	Recovery (Inches)	Field Description	Strata Changes
S-1	0' - 2'	4 6 7 7	6"	Dry, medium dense, brown, COARSE SAND AND FINE SAND, some fine gravel, trace organic silt.	
S-2	4' - 6'	4 2 2 4	16"	Dry, very loose, brown, FINE SAND, some coarse sand, trace inorganic silt.	4'
S-3	9' - 11'	12 12 11 9	10"	Wet, medium dense, brown, COARSE SAND, some fine sand, trace inorganic silt.	9'
S-4	14' - 16'	13 9 9 11	10"	Wet, medium dense, brown, COARSE SAND, some fine sand, trace inorganic silt.	
S-5	19' - 21'	7 13 8 13	8"	Wet, medium dense, grey, COARSE SAND, some fine sand, trace inorganic silt.	
S-6	24' - 26'	17 11 7 5	12"	Wet, medium dense, grey, COARSE SAND AND FINE SAND, some inorganic silt.	24'
S-7	29' - 31'	18 8 21 100	8"	Wet, medium dense, grey, COARSE SAND AND FINE SAND, some fine gravel, trace inorganic silt.	
				Top of BEDROCK at 32'.	32'
C-1	32' - 37'	4 5 14 5 6	54"	Began coring. Grey, moderately weathered, SCHIST INTO GREY GRANITE. Percent Recovery= 90%	
				Bottom of Exploration = 37'	37'

EL. 130.0, EL. 120.0, EL. 110.0, EL. 100.0, EL. 90.0
EL. 124.2, EL. 119.2, EL. 118.2, EL. 104.2, EL. 96.2, EL. 91.2

Notes: Sample by cathead

Protective Device - Stand: Box: Well Depth: Solid Pipe: Stick Up Pipe: Screen Pipe:

Penetration Resistance (N) Guide:

Cohesionless Soils (Sands, Gravels)		Cohesive Soils (Silts, Clays)	
Relative Density	Penetration Resistance	Consistency	Penetration Resistance
Very Loose	0 - 4	Very Soft	0 - 2
Loose	4 - 10	Soft	2 - 4
Medium Dense	10 - 30	Medium Stiff	4 - 8
Dense	30 - 50	Stiff	8 - 15
Very Dense	Over 50	Very Stiff	15 - 30
N=Sum of Second and Third 6" Blow Counts		Hard	Over 30

Terms Used for Second Entry of Descriptions: and = 40-50%, some = 10-40%, trace = 10% or less

Type of Drill Rig: Mobile B-47
Casing Type: HW Size: 4" Hammer Weight: 300Lbs. Fall: 30" Depth: 30'
Signs: Cones: Arrow-Board:
Sampler Type: S/S Size: 1 3/8" Automatic Hammer Weight: Safety Hammer Weight: 140Lbs. Donut Hammer Weight: Fall: 30"
Core Barrel Type: NX Size: 2.15"

BORING TB–6
SCALE: 1" = 5'

massDOT Highway

NEW HAMPSHIRE BORING, INC.
P.O. Box 165
Derry, NH 03038

Phone: (603)437-1610
Fax: (603) 437-0034
E Mail: nhb@nhboring.com

Boring No. BB-1
Scale 1" = 5'

City/Town: Concord | Bridge: Bridge Borings | Project File No: 602091 | Contract No: 58183
Project: Route 2 Construction at the Concord Rotary | Date & Time Started: 10-02-09 10:45AM | Total Hours: 9
Groundwater Depth: 10' | Date & Time: 10-05-10 7:00PM | Date & Time Completed: 10-05-10 11:15AM
Coordinates: N 2995843.1200 E 681321.7253 | Driller's Name: Peter Labossiere | Helper's Name: Jack Lefebvre
Ground Elevation: 129.0' | Inspector's Name: Derek Lee | Inspector's Company: Lamson Engineering, Inc. for AECOM

Sample Number	Depth Range (Feet)	Blow Counts per 6 Inches Coring Times Minute Per Foot	Recovery Inches	Field Description	Strata Changes
S-1	0' - 2'	4 5 3 5	10"	Dry, loose, brown, COARSE SAND, some fine sand, trace organic silt.	
S-2	4' - 6'	14 4 5 9	8"	Wet, loose, brown, COARSE SAND, some fine gravel, trace fine sand.	
S-3	9' - 11'	12 12 10 9	12"	Wet, medium dense, brown, COARSE SAND, some fine sand, trace inorganic silt.	
S-4	14' - 16'	7 11 15 7	6"	Wet, medium dense, brown, COARSE SAND, some fine sand.	
S-5	19' - 21'	15 26 21 18	10"	Wet, dense, brown, COARSE SAND, some fine gravel, trace fine sand.	23'
S-6	24' - 25'6"	16 22 98/6'	8"	Wet, very dense, gray, COARSE SAND, some fine sand, trace inorganic silt.	
				Top of BEDROCK encountered at 29'.	29'
C-1	29' 29' - 34'	120 6 4 5 6 6	0" 56"	Began coring at 29'. Hard, moderately weathered, moderately fractured, pink-white to gray, GRANITE. Percent Recovery = 93%	
C-2	34' - 39'	4 6 5 6 6	59"	Hard, fresh, slightly fractured, gray and white GRANITE. Percent Recovery = 98%	
				Bottom of Exploration = 39'	39'

EL. 124.0 PROP. BOTTOM OF WEST ABUTMENT, EL. 119.0, EL. 106.0, EL. 100.0, EL. 93.5 APPROXIMATE PILE TIP ELEVATION, WEST ABUTMENT, EL. 90.0

Remarks: Sampling with cathead.

Arrow-Board: Signs: Cones:

Protective Device - Stand: Box: Well Depth: Solid Pipe: Stick Up Pipe: Screen Pipe:

Penetration Resistance (N) Guide:

Cohesionless Soils (Sands, Gravels)		Cohesive Soils (Silts, Clays)	
Relative Density	Penetration Resistance	Consistency	Penetration Resistance
Very Loose	0 - 4	Very Soft	0 - 2
Loose	4 - 10	Soft	2 - 4
Medium Dense	10 - 30	Medium Stiff	4 - 8
Dense	30 - 50	Stiff	8 - 15
Very Dense	Over 50	Very Stiff	15 - 30
N=Sum of Second and Third 6" Blow Counts		Hard	Over 30

Terms Used for Second Entry of Descriptions: and = 40-50%, some = 10-40%, trace = 10% or less

Type of Drill Rig: Mobile B-47
Casing HW Size: 4" Depth: 29'
Hammer Weight: 300 lbs.
Fall: 30"
Sampler Type: S/S Size: 1 3/8" Automatic Hammer Weight: Safety Hammer Weight: 140 lbs. Donut Hammer Weight: Fall: 30"
Core Barrel Type: NX Size: 2.15"

BORING BB–1
SCALE: 1" = 5'

massDOT Highway

NEW HAMPSHIRE BORING, INC.
P.O. Box 165
Derry, NH 03038

Phone: (603)437-1610
Fax: (603) 437-0034
E Mail: nhb@nhboring.com

Boring No. BB-2
Scale 1" = 5'

City/Town: Concord | Bridge: Bridge Borings | Project File No: 602091 | Contract No: 58183
Project: Route 2 Construction at the Concord Rotary | Date & Time Started: 11-10-09 9:00AM | Total Hours: 6
Groundwater Depth: 8' | Date & Time: 11-10-09 2:00PM | Date & Time Completed: 11-10-09 3:00PM
Coordinates: N 2995815.9 E 681385.5 | Driller's Name: Peter Labossiere | Helper's Name: Jack Lefebvre
Ground Elevation: 128' | Inspector's Name: Derek Lee | Inspector's Company: Lamson Engineering, Inc. for AECOM

Sample Number	Depth Range (Feet)	Blow Counts per 6 Inches Coring Times Minute Per Foot	Recovery Inches	Field Description	Strata Changes
S-1	0' - 2'	4 4 3 3	12"	Dry, loose, brown, COARSE SAND, some fine sand.	
S-2	4' - 6'	4 3 3 3	18"	Dry, loose, brown, COARSE SAND, some fine sand.	
S-3	9' - 11'	8 6 4 3	10"	Wet, loose to medium dense, COARSE SAND, some fine sand, trace inorganic silt.	13'
S-4	14' - 16'	20 25 50 30	10"	Wet, very dense, brown, FINE SAND AND COARSE SAND, some inorganic silt.	
				Top of BEDROCK at 17', casing refusal at 17'.	17'
C-1	18' - 23'	8 8 7 9 11	47"	Rollerbit to 18' and began coring. Hard, gray, white GNEISS. Percent Recovery = 78%	
C-2	23' - 28'	8 4 5 6 6	60"	Hard, gray, white GNEISS. Percent Recovery = 78%	
				Bottom of Exploration = 28'	28'

EL. 124.0 PROP. BOTTOM OF EAST ABUTMENT, EL. 120.0, EL. 111.0, EL. 104.5 APPROXIMATE PILE TIP ELEVATION, EAST ABUTMENT, EL. 100.0

Remarks: Sampling with cathead.

Arrow-Board: Signs: Cones:

Protective Device - Stand: Box: Well Depth: Solid Pipe: Stick Up Pipe: Screen Pipe:

Penetration Resistance (N) Guide:

Cohesionless Soils (Sands, Gravels)		Cohesive Soils (Silts, Clays)	
Relative Density	Penetration Resistance	Consistency	Penetration Resistance
Very Loose	0 - 4	Very Soft	0 - 2
Loose	4 - 10	Soft	2 - 4
Medium Dense	10 - 30	Medium Stiff	4 - 8
Dense	30 - 50	Stiff	8 - 15
Very Dense	Over 50	Very Stiff	15 - 30
N=Sum of Second and Third 6" Blow Counts		Hard	Over 30

Terms Used for Second Entry of Descriptions: and = 40-50%, some = 10-40%, trace = 10% or less

Type of Drill Rig: Mobile B-47
Casing HW Size: 4" Depth: 17'
Hammer Weight: 300 lbs.
Fall: 30"
Sampler Type: S/S Size: 1 3/8" Automatic Hammer Weight: Safety Hammer Weight: 140 lbs. Donut Hammer Weight: Fall: 30"
Core Barrel Type: NX Size: 2.15"

BORING BB–2
SCALE: 1" = 5'

BORING NOTES:

1. LOCATION OF BORINGS SHOWN ON THE PLAN THUS: BB–1
2. BORINGS ARE TAKEN FOR PURPOSE OF DESIGN AND SHOW CONDITIONS AT BORING POINTS ONLY, BUT DO NOT NECESSARILY SHOW THE NATURE OF THE MATERIALS TO BE ENCOUNTERED DURING CONSTRUCTION.
3. WATER LEVELS SHOWN ON THE BORING LOGS WERE OBSERVED AT THE TIME OF TAKING BORINGS AND DO NOT NECESSARILY SHOW THE TRUE GROUND WATER LEVEL.
4. FIGURES IN COLUMNS INDICATE NUMBER OF BLOWS REQUIRED TO DRIVE A 1 3/8" I.D. SPLIT SPOON SAMPLER 6" USING A 140 POUND WEIGHT FALLING 30".
5. BORING SAMPLES ARE STORED AT A STORAGE FACILITY LOCATED ON ROUTE 114 (219 WINTHROP AVE.) IN LAWRENCE, MA. THE CONTRACTOR MAY EXAMINE THE SOIL AND ROCK SAMPLES BY CONTACTING THE MASSDOT GEOTECHNICAL SECTION AT 10 PARK PLAZA, BOSTON, MA.
6. ALL BORINGS WERE MADE IN OCTOBER 2009 AND NOVEMBER 2009.
7. BORINGS WERE MADE BY NEW HAMPSHIRE BORING, INC. LOCATED AT 1215 WEST CHESTNUT STREET, BROCKTON, MA 02301.
8. THE NORTH AMERICAN VERTICAL DATUM (NAVD) OF 1988 IS USED THROUGHOUT.
9. THE DEPTHS AS SHOWN ON THE BORING LOGS HAVE BEEN CONVERTED TO ELEVATIONS.

NOTE:

FOR LOCATION OF BORINGS, SEE SHEET 1.

MONTH DD, YYYY	ISSUED FOR CONSTRUCTION
DATE	DESCRIPTION
USE ONLY PRINTS OF LATEST DATE	

606223_BRDG(C19037)-BORINGS.DWG Plotted on 26-Jun-2018 12:25 PM
First Structural Submittal (S1) 22-Jun-2018

ACTON & CONCORD
BRUCE FREEMAN RAIL TRAIL PHASE 2B

STATE	FED. AID PROJ. NO.	SHEET NO.	TOTAL SHEETS
MA	–	104	146
PROJECT FILE NO. 606223			

PLAN & ELEVATION

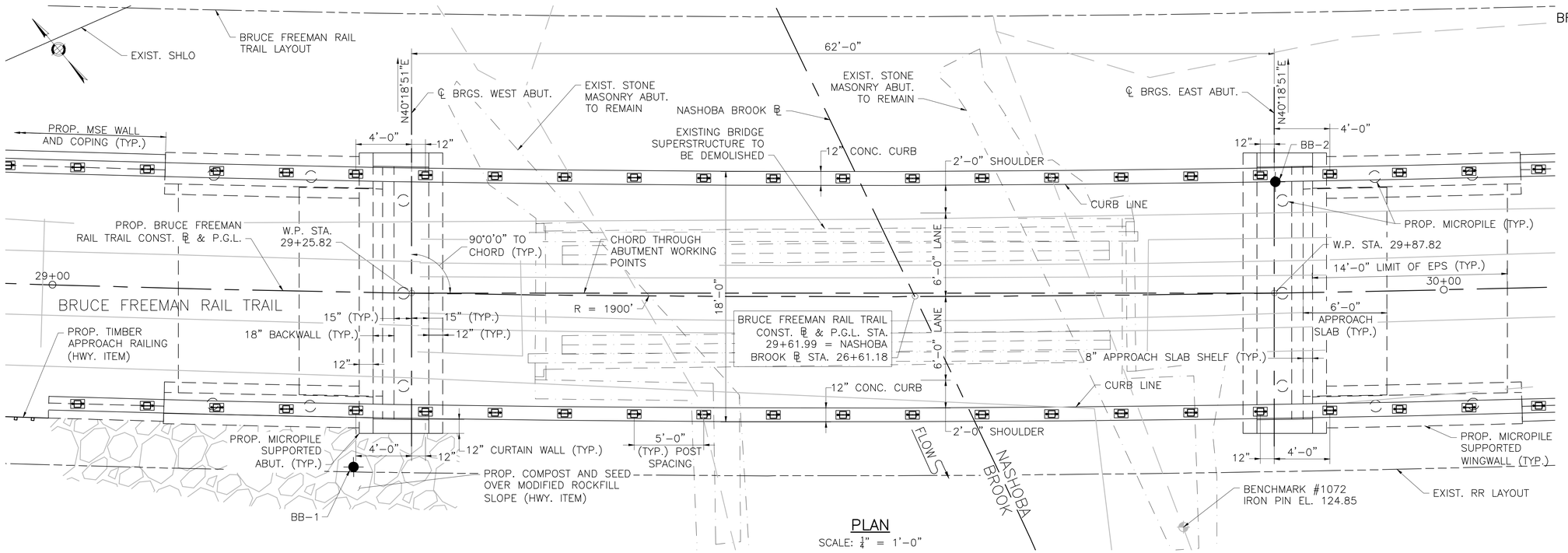

PLAN
SCALE: 1/4" = 1'-0"

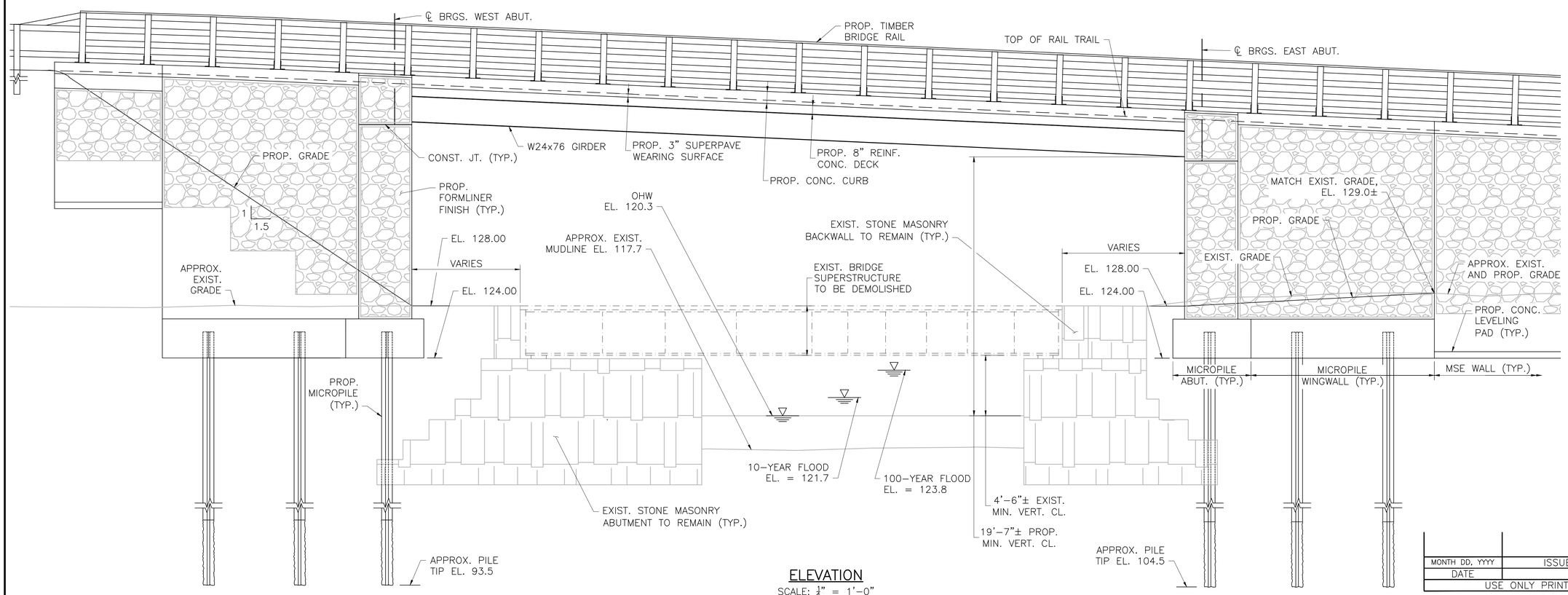

ELEVATION
SCALE: 1/4" = 1'-0"

MONTH DD, YYYY	ISSUED FOR CONSTRUCTION
DATE	DESCRIPTION
USE ONLY PRINTS OF LATEST DATE	

SHEET 4 OF 14 SHEETS BRIDGE NO. C-19-037 (BF4)

606223_BR04(C19037)-PLAN & ELEVATION.DWG Plotted on 26-Jun-2018 12:26 PM

First Structural Submittal (S1) 22-Jun-2018

ACTON & CONCORD
BRUCE FREEMAN RAIL TRAIL PHASE 2B

STATE	FED. AID PROJ. NO.	SHEET NO.	TOTAL SHEETS
MA	–	105	146
PROJECT FILE NO. 606223			

WEST ABUTMENT PLAN & ELEVATION

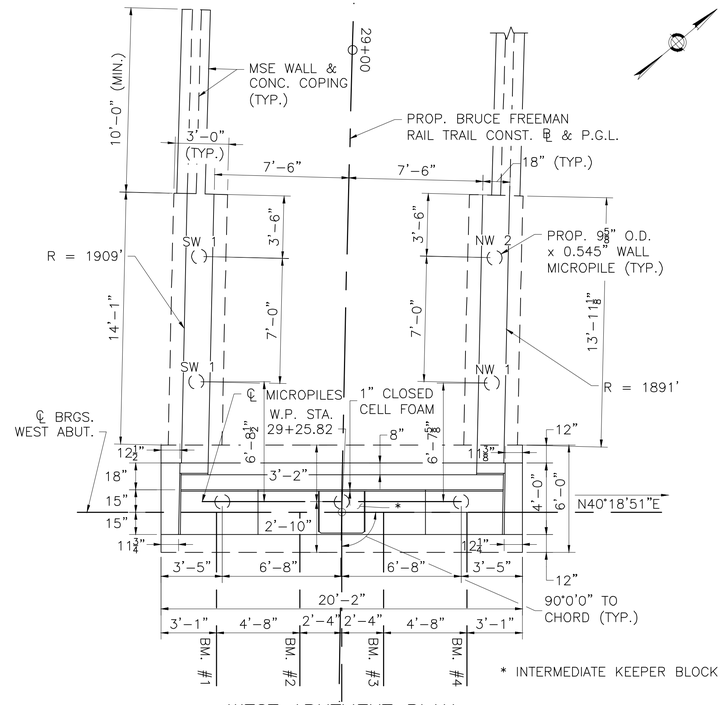

WEST ABUTMENT PLAN

SCALE: ¼" = 1'-0"

WINGWALL MICROPILE LOCATION TABLE

MICROPILE NO.	STATION	OFFSET	NORTHING	EASTING
NW 1	29+18.44	8.25' LT	2995861.0134	681332.9178
NW 2	29+11.41	8.25' LT	2995865.6589	681327.6814
SW 1	29+18.69	8.25' RT	2995848.4804	681322.1828
SW 2	29+11.72	8.25' RT	2995853.1249	681316.9455

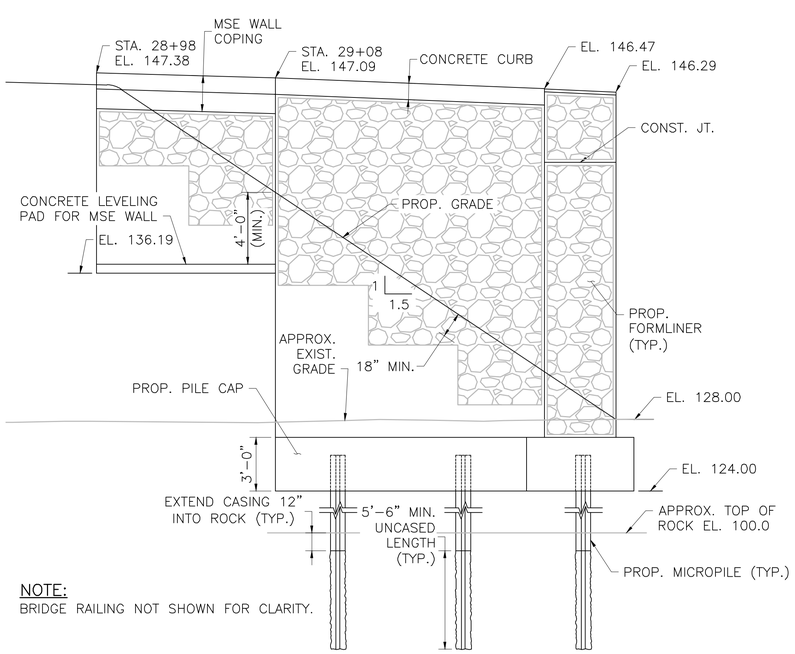

NOTE:
BRIDGE RAILING NOT SHOWN FOR CLARITY.

SOUTHWEST WALL ELEVATION

SCALE: ¼" = 1'-0"

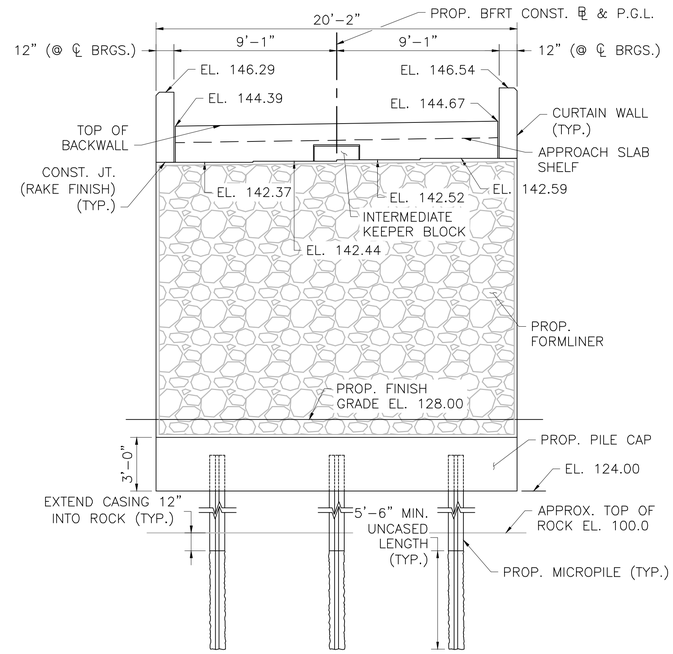

WEST ABUTMENT ELEVATION

SCALE: ¼" = 1'-0"

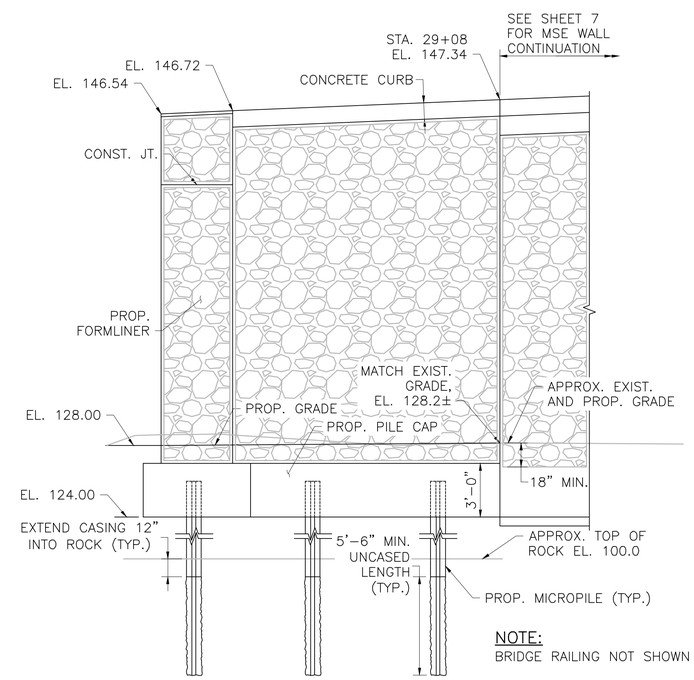

NOTE:
BRIDGE RAILING NOT SHOWN FOR CLARITY.

NORTHWEST WALL ELEVATION

SCALE: ¼" = 1'-0"

MONTH DD, YYYY	ISSUED FOR CONSTRUCTION
DATE	DESCRIPTION
USE ONLY PRINTS OF LATEST DATE	

606223_BRG5(C190371-WABUT PLAN & ELEV.DWG Plotted on 26-Jun-2018 12:26 PM
First Structural Submittal (S1) 22-Jun-2018

ACTON & CONCORD
BRUCE FREEMAN RAIL TRAIL PHASE 2B

STATE	FED. AID PROJ. NO.	SHEET NO.	TOTAL SHEETS
MA	–	106	146
PROJECT FILE NO. 606223			

EAST ABUTMENT PLAN & ELEVATION

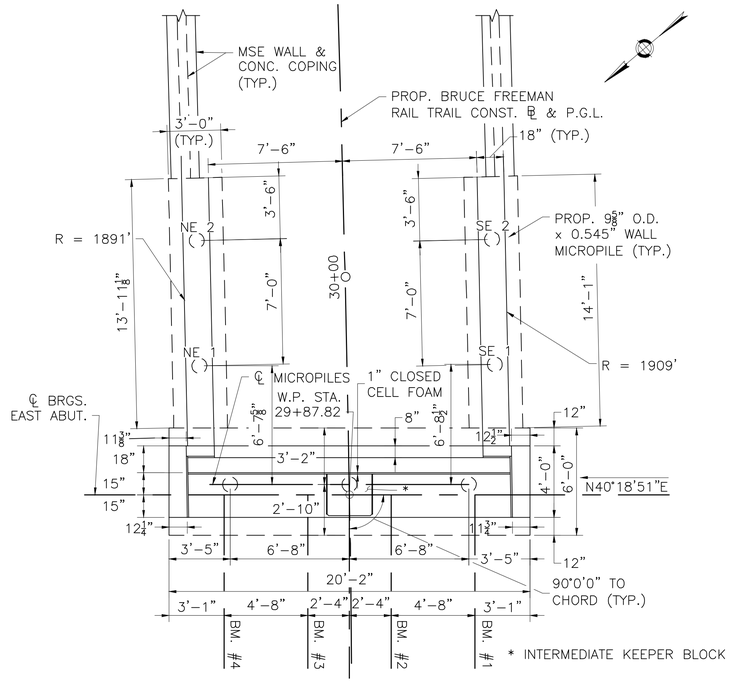

EAST ABUTMENT PLAN

SCALE: ¼" = 1'-0"

WINGWALL MICROPILE LOCATION TABLE

MICROPILE NO.	STATION	OFFSET	NORTHING	EASTING
SE 1	29+94.95	8.25' RT	2995798.9354	681380.5751
SE 2	30+01.92	8.25' RT	2995794.5245	681386.0106
NE 1	29+95.20	8.25' LT	2995811.5672	681391.1922
NE 2	30+02.23	8.25' LT	2995807.1553	681396.6269

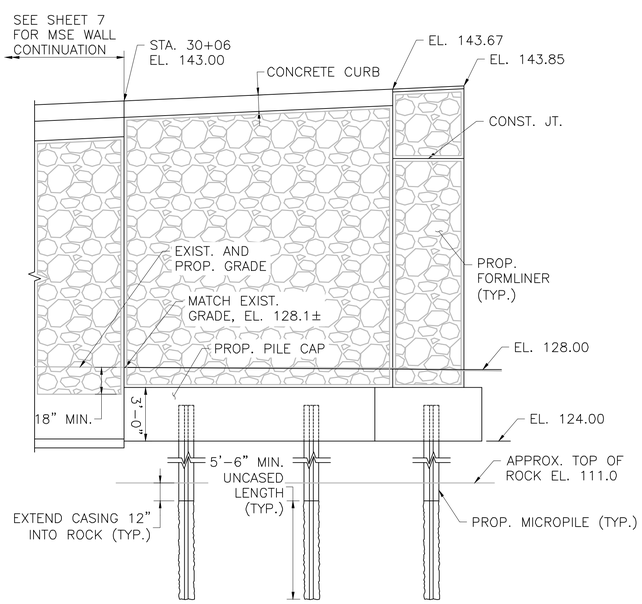

NOTE:
BRIDGE RAILING NOT SHOWN FOR CLARITY.

NORTHEAST WALL ELEVATION

SCALE: ¼" = 1'-0"

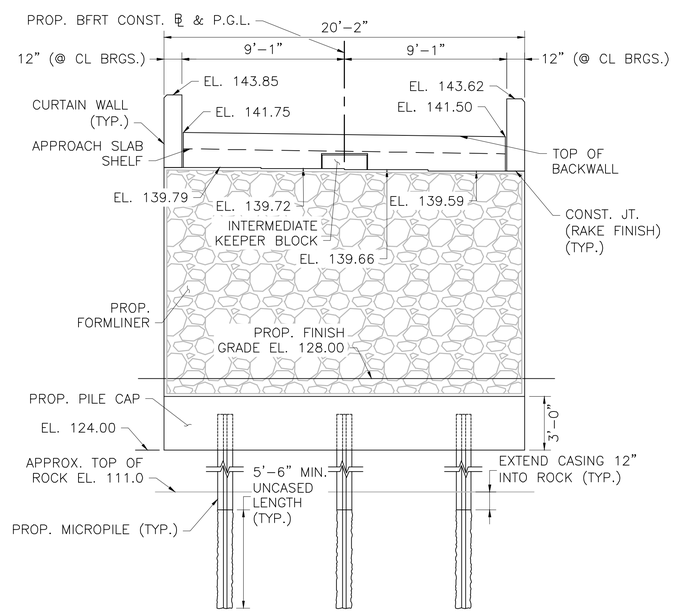

EAST ABUTMENT ELEVATION

SCALE: ¼" = 1'-0"

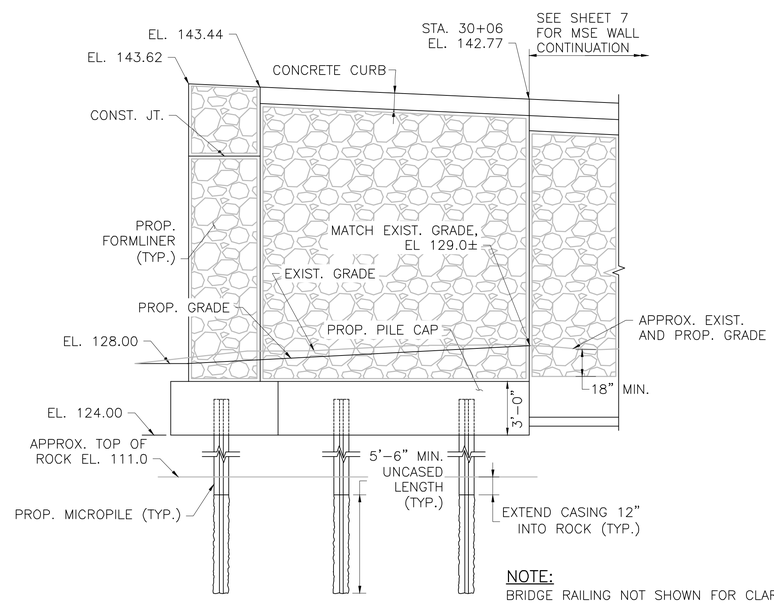

NOTE:
BRIDGE RAILING NOT SHOWN FOR CLARITY.

SOUTHEAST WALL ELEVATION

SCALE: ¼" = 1'-0"

MONTH DD, YYYY	ISSUED FOR CONSTRUCTION
DATE	DESCRIPTION
USE ONLY PRINTS OF LATEST DATE	

606223_BR06(C19037)-EABUT. PLAN & ELEV.DWG Plotted on 26-Jun-2018 12:26 PM
First Structural Submittal (S1) 22-Jun-2018

ACTON & CONCORD
BRUCE FREEMAN RAIL TRAIL PHASE 2B

STATE	FED. AID PROJ. NO.	SHEET NO.	TOTAL SHEETS
MA	–	107	146
PROJECT FILE NO. 606223			

MSE WALL PLANS & ELEVATIONS

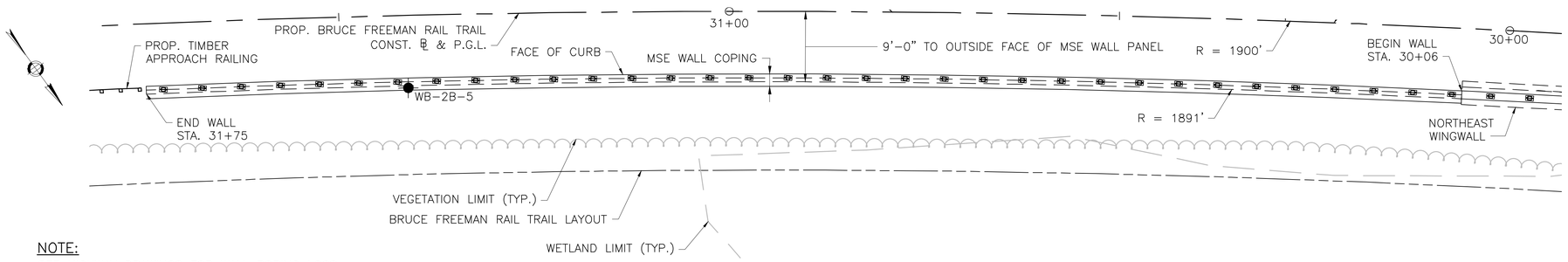

NOTE:
SEE HIGHWAY DRAWINGS FOR WALL BORING LOGS.

NORTHEAST MSE WALL PLAN
SCALE: 1/8" = 1'–0"

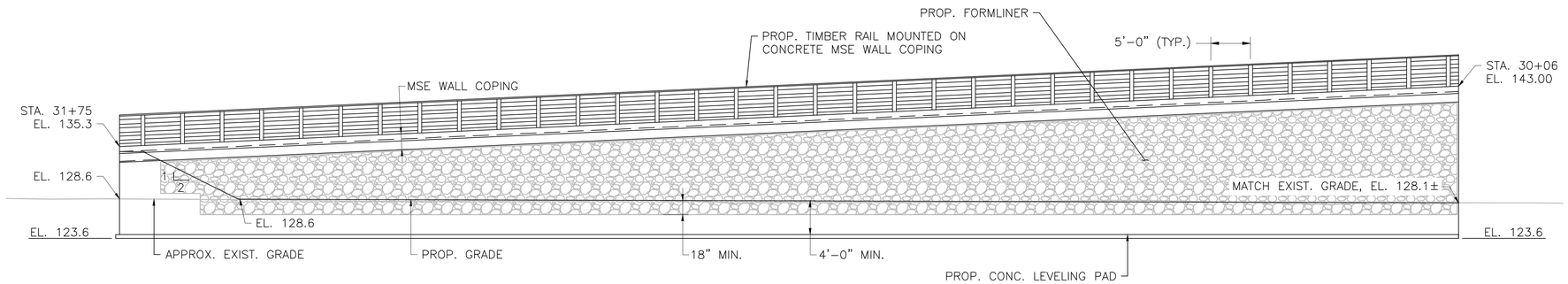

NORTHEAST MSE WALL ELEVATION
SCALE: 1/8" = 1'–0"

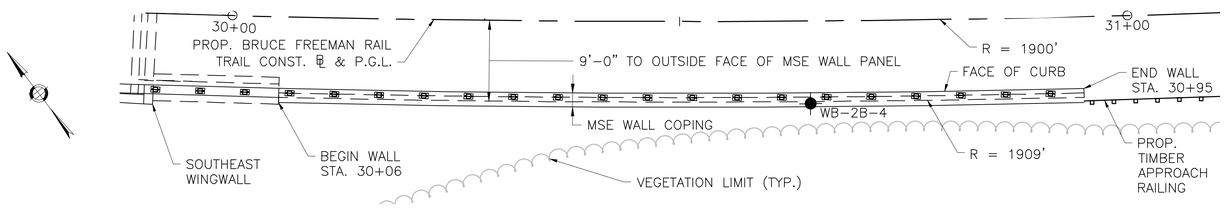

SOUTHEAST MSE WALL PLAN
SCALE: 1/8" = 1'–0"

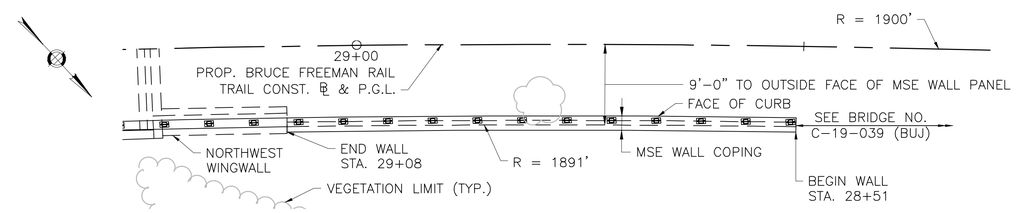

NORTHWEST MSE WALL PLAN
SCALE: 1/4" = 1'–0"

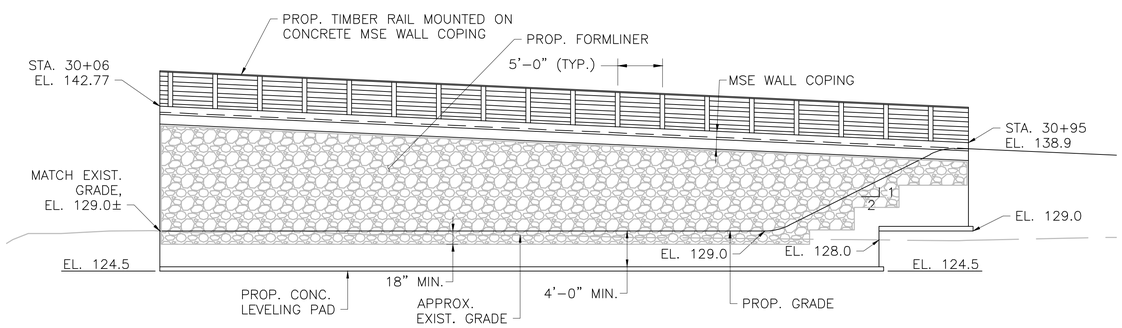

SOUTHEAST MSE WALL ELEVATION
SCALE: 1/8" = 1'–0"

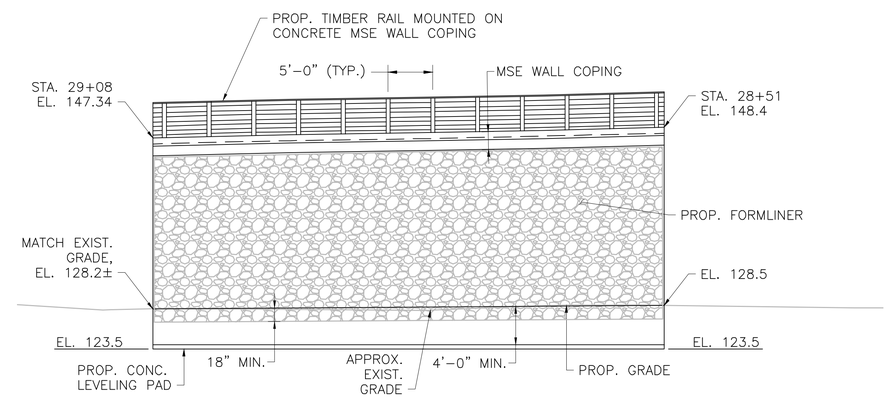

NORTHWEST MSE WALL ELEVATION
SCALE: 1/8" = 1'–0"

MONTH DD, YYYY	ISSUED FOR CONSTRUCTION
DATE	DESCRIPTION
USE ONLY PRINTS OF LATEST DATE	

606223_BR07(C19037)-MSE WALLS PLANS & ELEVS.DWG Plotted on 26-Jun-2018 12:28 PM
First Structural Submittal (S1) 22-Jun-2018

ACTON & CONCORD
BRUCE FREEMAN RAIL TRAIL PHASE 2B

STATE	FED. AID PROJ. NO.	SHEET NO.	TOTAL SHEETS
MA	–	108	146
PROJECT FILE NO. 606223			

ABUTMENT DETAILS (1 OF 2)

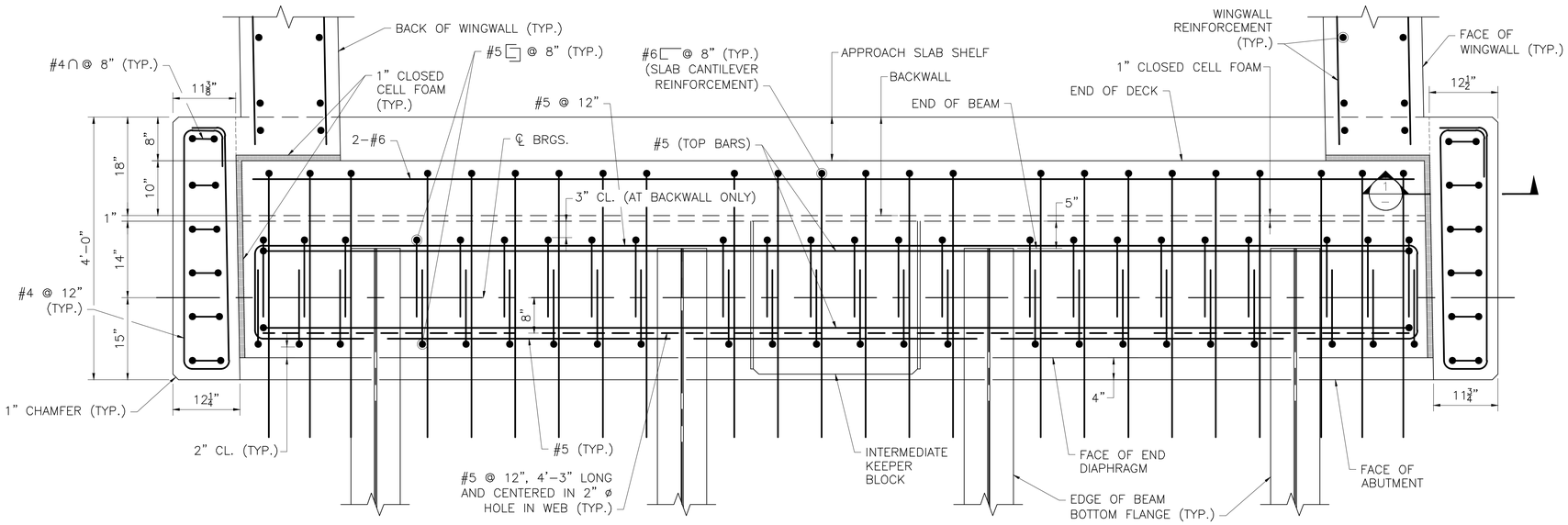

NOTES:
1. EAST ABUTMENT SHOWN, WEST ABUTMENT SIMILAR.
2. FORMLINER NOT SHOWN FOR CLARITY.

END DIAPHRAGM PLAN
SCALE: 1" = 1'-0"

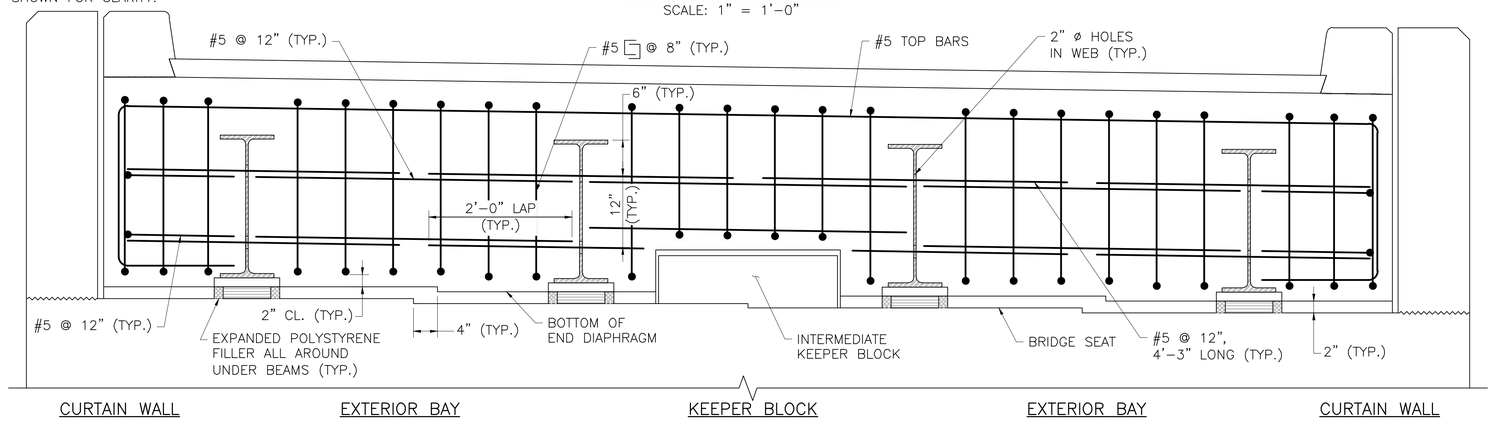

NOTE:
CONTRACTOR MAY USE EXPANDED POLYSTYRENE FILLER OR A REMOVABLE FORM TO FORM THE BOTTOM OF THE END DIAPHRAGM.

END DIAPHRAGM ELEVATION
SCALE: 1" = 1'-0"

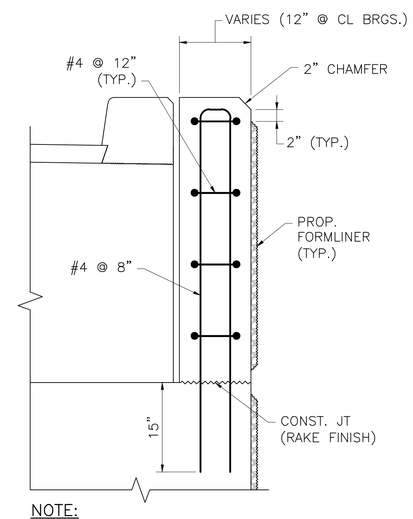

NOTE:
ABUTMENT REINFORCEMENT BELOW CONSTRUCTION JOINT HAS BEEN OMITTED FOR CLARITY.

SECTION 1
SCALE: 1" = 1'-0"

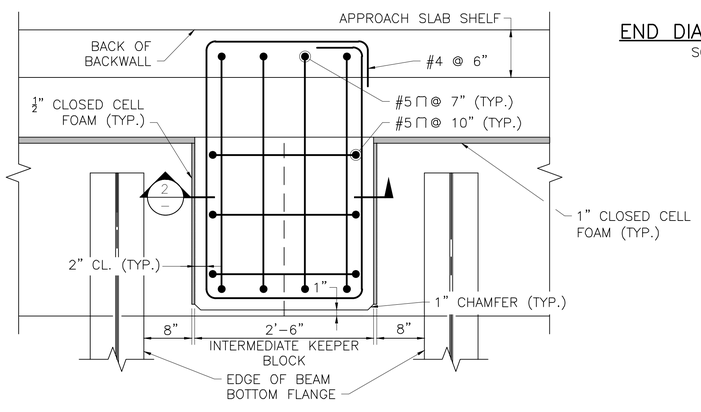

INTERMEDIATE KEEPER BLOCK
SCALE: 1" = 1'-0"

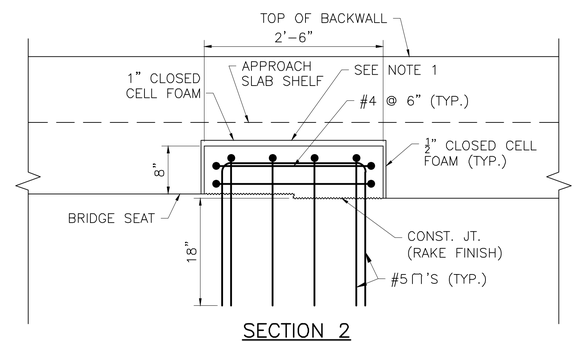

SECTION 2
SCALE: 1" = 1'-0"

NOTES:
1. TOP OF KEEPER BLOCK SHALL BE TROWELED SMOOTH PARALLEL TO PROFILE GRADE.
2. ABUTMENT REINFORCEMENT BELOW CONSTRUCTION JOINT HAS BEEN OMITTED FOR CLARITY.

MONTH DD, YYYY	ISSUED FOR CONSTRUCTION
DATE	DESCRIPTION
USE ONLY PRINTS OF LATEST DATE	

606223_BR08(C19037)-ABUT. DETAILS 1 OF 2.DWG Plotted on 26-Jun-2018 12:29 PM
First Structural Submittal (S1) 22-Jun-2018

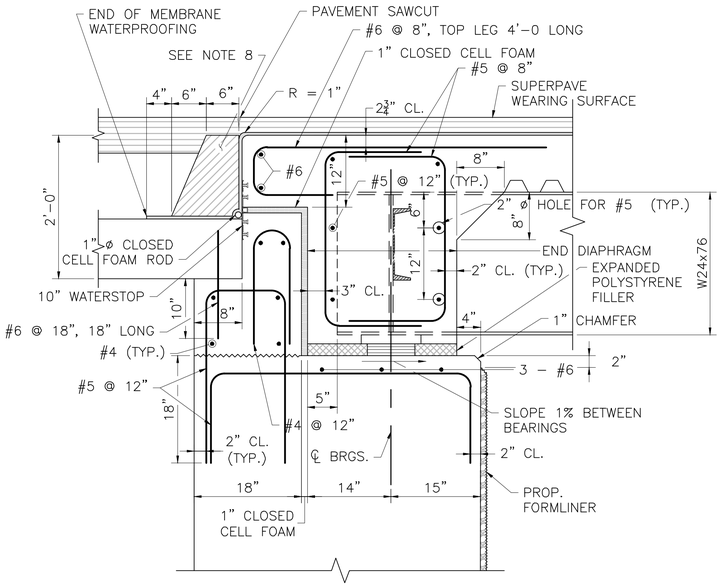

DETAILS AT ABUTMENT – ROADWAY SECTION

SCALE: 1" = 1'-0"

ROADWAY SECTION NOTES:

1. ALL REINFORCEMENT SHOWN IN THIS DETAIL SHALL BE COATED.
2. ALL BACKWALL CONCRETE ABOVE THE CONSTRUCTION JOINT LOCATED AT THE BRIDGE SEAT SHALL BE 4000 PSI, ¾ IN, 610 CEMENT CONCRETE. THE CONSTRUCTION JOINT SHALL BE GIVEN A RAKE FINISH WITH A ¼" MINIMUM AMPLITUDE.
3. TOP OF BACKWALL SHALL BE TROWELED SMOOTH PARALLEL TO THE PROFILE GRADE.
4. THE BACKWALL, KEEPER BLOCK, AND CURTAIN WALL CONCRETE MUST BE PLACED AND SUFFICIENTLY CURED PRIOR TO PLACING THE END DIAPHRAGM CONCRETE.
5. THE END DIAPHRAGM CONCRETE SHALL BE 4000 PSI, ¾ IN, 585 HP CEMENT CONCRETE AND SHALL BE PLACED MONOLITHICALLY WITH THE DECK.
6. PRIOR TO PLACING THE END DIAPHRAGM CONCRETE, CLOSED CELL FOAM OF THE SPECIFIED THICKNESSES SHALL BE ATTACHED WITH ADHESIVE TO ALL SURFACES OF THE BACKWALL, KEEPER BLOCKS, AND CURTAIN WALLS AS SHOWN ON THE PLANS. EXPANDED POLYSTYRENE FILLER SHALL BE PLACED UNDER THE BEAM SOLE PLATE AND THE BOTTOM OF THE END DIAPHRAGM SHALL BE FORMED AS SPECIFIED. THE CONTRACTOR SHALL INSURE THAT ALL ABUTMENT CONCRETE IS PROPERLY LINED. END DIAPHRAGM CONCRETE MUST NOT COME IN DIRECT CONTACT WITH ABUTMENT CONCRETE.
7. DRAPE MEMBRANE WATERPROOFING OVER CLOSED CELL FOAM BACKER ROD.
8. PROTECTIVE COURSE TO BE SUPERPAVE BRIDGE PROTECTIVE COURSE (SPC-B-12.5), PLACED IN 2" LAYERS AND COMPACTED WITH A MECHANICAL HAND-GUIDED TAMPER WITHIN 12 HOURS AFTER PLACING MEMBRANE WATERPROOFING.

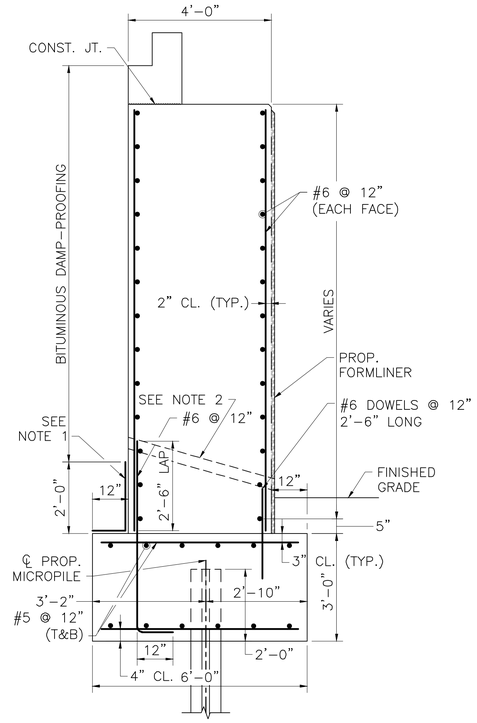

TYPICAL ABUTMENT SECTION

SCALE: ½" = 1'-0"

ABUTMENT NOTES:

1. MEMBRANE WATERPROOFING AND 8"x16"x2", 4000 PSI, ¾ IN, 610 CEMENT CONCRETE BLOCKS LAID IN MORTAR OR OTHER WATERPROOFING PROTECTIVE COURSE, MIN. 2" THICK AS SPECIFIED IN MHD STANDARD SPECIFICATIONS.
2. 4" ø WEEP HOLES 10'-0" O.C. (JUST ABOVE PROTECTIVE COURSE).
3. ALL CONCRETE SHALL BE 4000 PSI, 1½ IN, 565 CEMENT CONCRETE EXCEPT THE BACKWALL, WHICH SHALL BE 4000 PSI, ¾ IN, 610 CEMENT CONCRETE.
4. THE FACTORED AXIAL DESIGN LOAD PER PILE IS 193 KIPS AS PER AASHTO LRFD BRIDGE DESIGN SPECIFICATIONS STRENGTH I LOAD COMBINATION.

   THE FACTORED STRUCTURAL RESISTANCE PER PILE IS 198 KIPS AND IS THE PRODUCT OF THE NOMINAL STRUCTURAL RESISTANCE OF 264 KIPS AND A RESISTANCE FACTOR OF 0.75.
5. THE FACTORED GEOTECHNICAL PILE RESISTANCE IS 195 KIPS AND IS THE PRODUCT OF THE NOMINAL GEOTECHNICAL RESISTANCE OF 354 KIPS AND A RESISTANCE FACTOR OF 0.55. THE ESTIMATED TIP ELEVATIONS ARE 93.5 AT THE WEST ABUTMENT AND 104.5 AT THE EAST ABUTMENT.

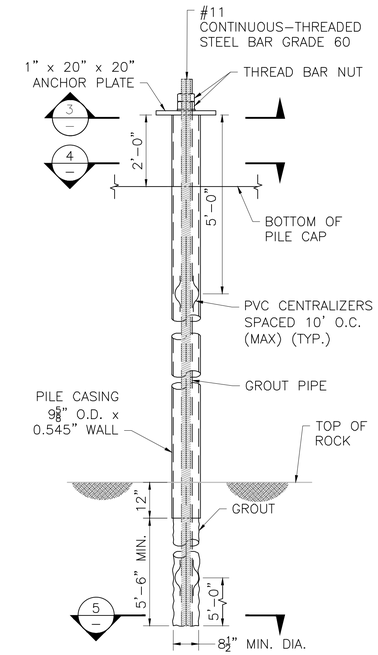

MICROPILE ELEVATION

SCALE: ½" = 1'-0"

MICROPILE NOTES:

1. STEEL CASING SHALL CONFORM TO THE REQUIREMENTS OF API 5L GRADE X52 PSL 2 WHICH HAS A MINIMUM YIELD STRENGTH OF 52,000 PSI.
2. ANCHOR PLATES SHALL CONFORM TO THE REQUIREMENTS OF ASTM A709 GRADE 50.
3. GROUT SHALL HAVE A MINIMUM 28-DAY COMPRESSIVE STRENGTH OF 5000 PSI AND BE PLACED BY GRAVITY HEAD ONLY.
4. CENTRAL REINFORCING BAR SHALL CONFORM TO ASTM A615 GRADE 60 AND BE CONTINUOUSLY THREADED FOR THE ENTIRE BAR LENGTH.
5. FOR CASING SPLICE REQUIREMENTS, SEE SPECIAL PROVISIONS.
6. PRIOR TO THE START OF THE INSTALLATION OF THE MICROPILES, THE CONTRACTOR SHALL SUBMIT A PILE SCHEDULE, PILE INSTALLATION AND PILE TESTING PLAN FOR REVIEW AND APPROVAL OF THE ENGINEER.

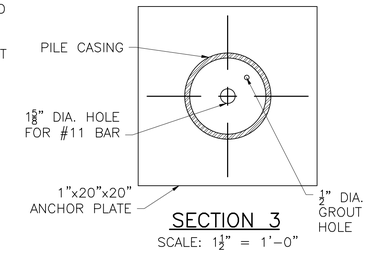

SECTION 3

SCALE: 1½" = 1'-0"

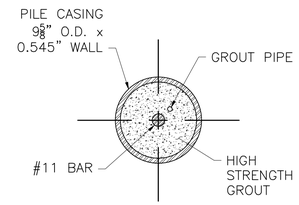

SECTION 4

SCALE: 1½" = 1'-0"

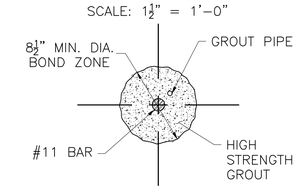

SECTION 5

SCALE: 1½" = 1'-0"

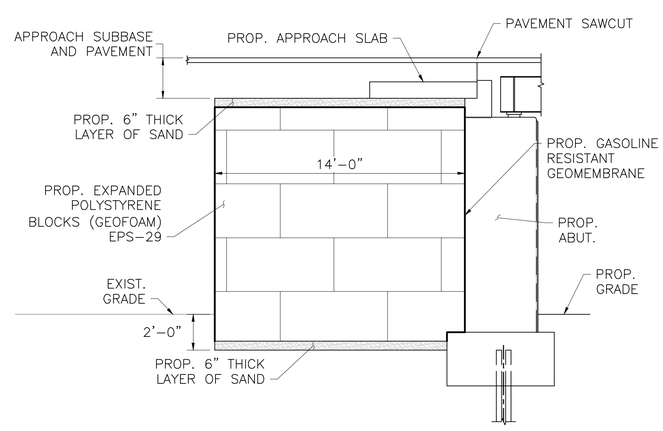

ABUTMENT EPS DETAILS

SCALE: ¼" = 1'-0"

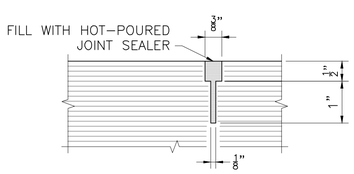

PAVEMENT SAWCUT DETAIL

NOT TO SCALE

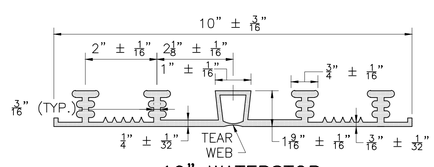

10" WATERSTOP

NOT TO SCALE

MONTH DD, YYYY	ISSUED FOR CONSTRUCTION
DATE	DESCRIPTION
USE ONLY PRINTS OF LATEST DATE	

606223_BR09(C19037)-ABUT. DETAILS 2 OF 2.DWG Plotted on 26-Jun-2018 12:29 PM
First Structural Submittal (S1) 22-Jun-2018

ACTON & CONCORD
BRUCE FREEMAN RAIL TRAIL PHASE 2B

STATE	FED. AID PROJ. NO.	SHEET NO.	TOTAL SHEETS
MA	–	110	146
PROJECT FILE NO. 606223			

WALL DETAILS

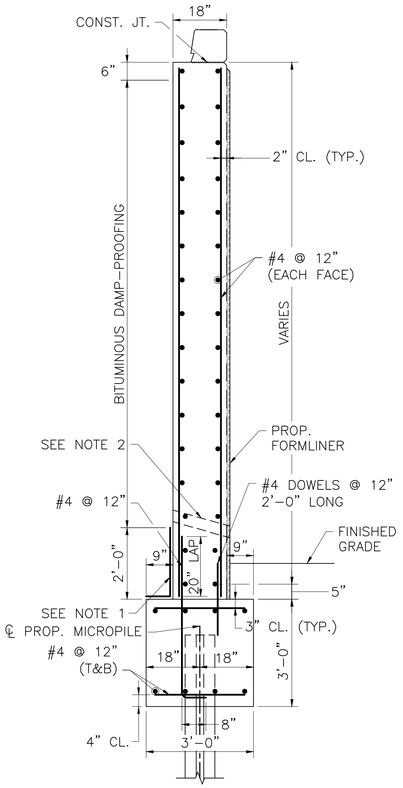

TYPICAL WINGWALL SECTION

SCALE: $\frac{1}{2}$" = 1'-0"

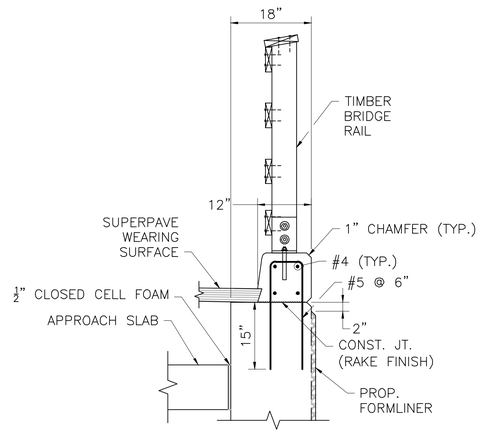

TOP OF WINGWALL DETAILS

SCALE: $\frac{3}{4}$" = 1'-0"

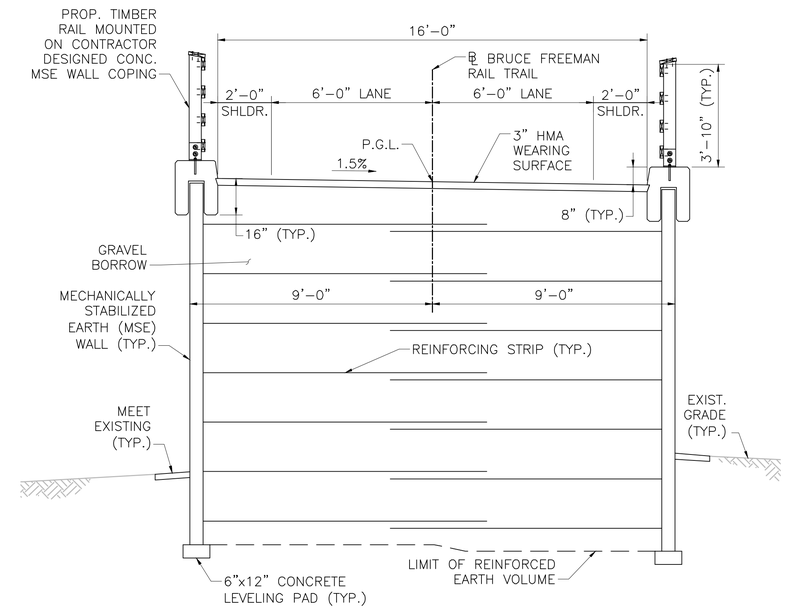

APPROACH MSE WALL DETAILS

SCALE: $\frac{3}{8}$" = 1'-0"

WINGWALL NOTES:

1. MEMBRANE WATERPROOFING AND 8"x16"x2", 4000 PSI, $\frac{3}{4}$ IN, 610 CEMENT CONCRETE BLOCKS LAID IN MORTAR OR OTHER WATERPROOFING PROTECTIVE COURSE, MIN. 2" THICK AS SPECIFIED IN MHD STANDARD SPECIFICATIONS.
2. 4" ø WEEP HOLES 10'-0" O.C. (JUST ABOVE PROTECTIVE COURSE).
3. ALL CONCRETE SHALL BE 4000 PSI, $1\frac{1}{2}$ IN, 565 CEMENT CONCRETE.
4. THE FACTORED AXIAL DESIGN LOAD PER PILE IS 193 KIPS AS PER AASHTO LRFD BRIDGE DESIGN SPECIFICATIONS STRENGTH I LOAD COMBINATION.
5. THE FACTORED GEOTECHNICAL PILE RESISTANCE IS 195 KIPS AND IS THE PRODUCT OF THE NOMINAL GEOTECHNICAL RESISTANCE OF 354 KIPS AND A RESISTANCE FACTOR OF 0.55. THE ESTIMATED TIP ELEVATIONS ARE 93.5 AT THE WEST WINGWALLS AND 104.5 AT THE EAST WINGWALLS.

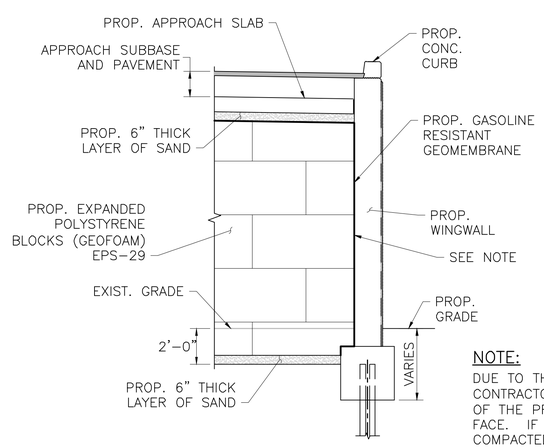

WINGWALL EPS DETAILS

SCALE: $\frac{1}{4}$" = 1'-0"

NOTE:

DUE TO THE CURVATURE OF THE TRAIL AND THE WINGWALLS, THE CONTRACTOR HAS THE OPTION TO TERMINATE THE EPS 6" FROM THE BACK OF THE PROPOSED WINGWALLS AND INSTALL THE EPS WITH A VERTICAL FACE. IF THIS OPTION IS CHOSEN, THE VOID SHALL BE FILLED WITH COMPACTED SAND FILL.

MSE WALL NOTES:

1. THE FACTORED BEARING PRESSURE = 6.07 KSF AS PER AASHTO LRFD BRIDGE DESIGN SPECIFICATIONS STRENGTH I LOAD COMBINATION.

   FACTORED BEARING RESISTANCE = 6.10 KSF. FACTORED BEARING RESISTANCE IS THE PRODUCT OF THE NOMINAL BEARING RESISTANCE AND A RESISTANCE FACTOR OF 0.65.
2. THE SOIL REINFORCEMENT LENGTH SHALL BE AS A MINIMUM 70% OF THE DESIGN HEIGHT (H) BUT NOT LESS THAN 8'-0".

MONTH DD, YYYY	ISSUED FOR CONSTRUCTION
DATE	DESCRIPTION
USE ONLY PRINTS OF LATEST DATE	

606223_BR10(C19037)-WALL DETAILS.DWG Plotted on 26-Jun-2018 12:29 PM
First Structural Submittal (S1) 22-Jun-2018

ACTON & CONCORD
BRUCE FREEMAN RAIL TRAIL PHASE 2B

STATE	FED. AID PROJ. NO.	SHEET NO.	TOTAL SHEETS
MA	–	111	146
PROJECT FILE NO. 606223			

APPROACH SLAB PLAN & DETAILS

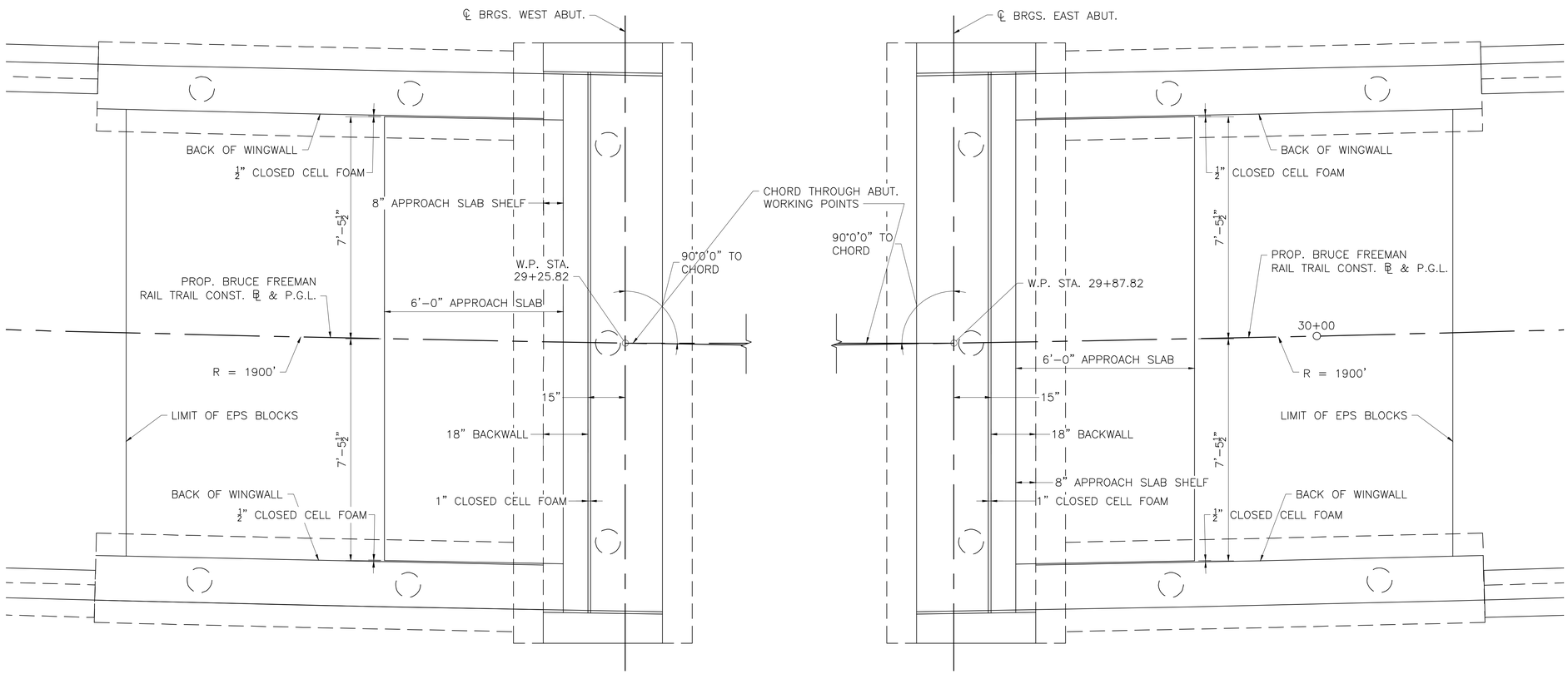

APPROACH SLAB PLAN

SCALE: ½" = 1'-0"

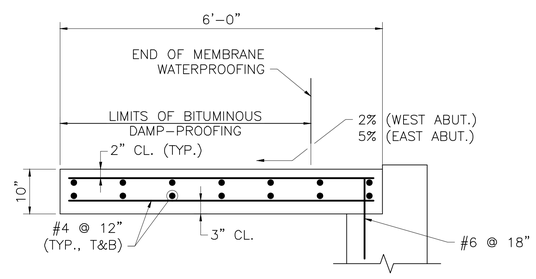

NOTES:

1. APPROACH SLAB TO BE 4000 PSI, 1½ IN, 565 CEMENT CONCRETE.
2. PLACE LONGITUDINAL REINFORCEMENT PARALLEL TO THE ℄ OF CONSTRUCTION. PLACE TRANSVERSE REINFORCEMENT PARALLEL TO ABUTMENT.

APPROACH SLAB DETAILS

SCALE: ¾" = 1'-0"

DATE	DESCRIPTION
MONTH DD, YYYY	ISSUED FOR CONSTRUCTION
USE ONLY PRINTS OF LATEST DATE	

606223_BR11(C19037)-APPR. SLAB.DWG Plotted on 26-Jun-2018 12:29 PM
First Structural Submittal (S1) 22-Jun-2018

STATE	FED. AID PROJ. NO.	SHEET NO.	TOTAL SHEETS
MA	–	112	146
PROJECT FILE NO. 606223			

FRAMING PLAN & STRUCTURAL STEEL DETAILS

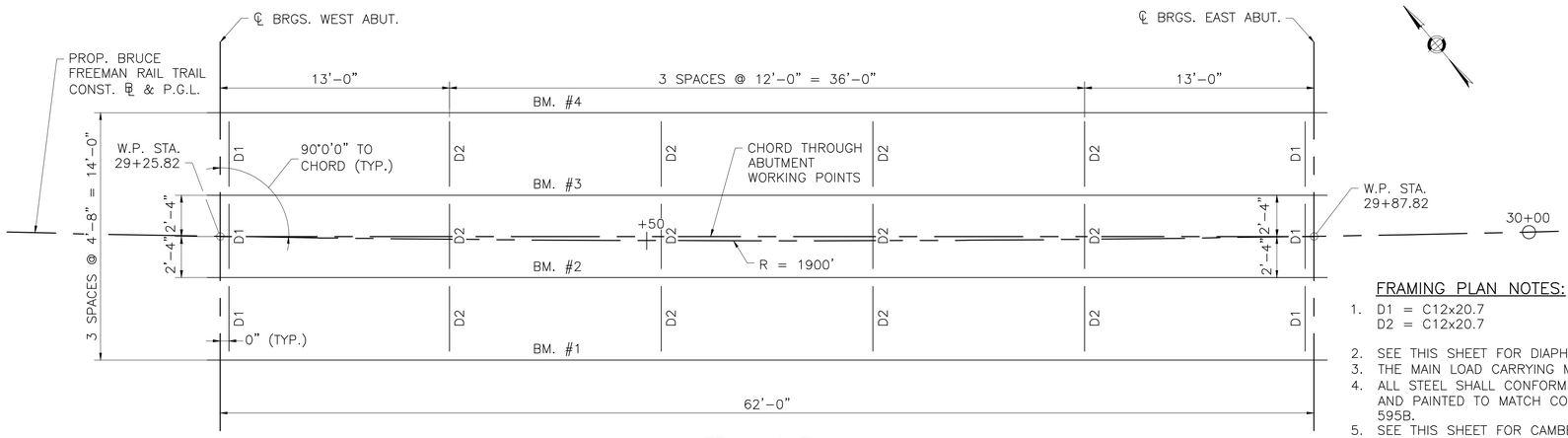

FRAMING PLAN
SCALE: $\frac{1}{4}$" = 1'–0"

FRAMING PLAN NOTES:

1. D1 = C12x20.7
   D2 = C12x20.7
2. SEE THIS SHEET FOR DIAPHRAGM DETAILS.
3. THE MAIN LOAD CARRYING MEMBERS ARE BM. #1 THROUGH BM. #4.
4. ALL STEEL SHALL CONFORM TO AASHTO M270 GRADE 50 (GALVANIZED) AND PAINTED TO MATCH COLOR CHIP NO. 16495 OF FEDERAL STANDARD 595B.
5. SEE THIS SHEET FOR CAMBER TABLE.
6. FOR SHEAR STUD SPACING, SEE BEAM ELEVATION (THIS SHEET).

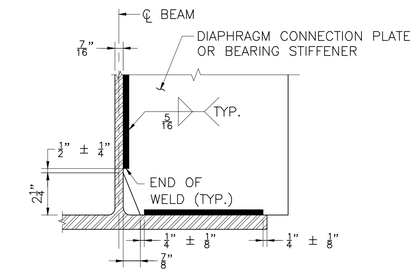

CLIP DETAIL
NOT TO SCALE

NOTE:
AT STIFFENER LOCATIONS, MODIFY THE PLATE ATTACHMENT TO THE FLANGES AS SHOWN IN THE TYPICAL STIFFENER ATTACHMENTS ON THIS SHEET.

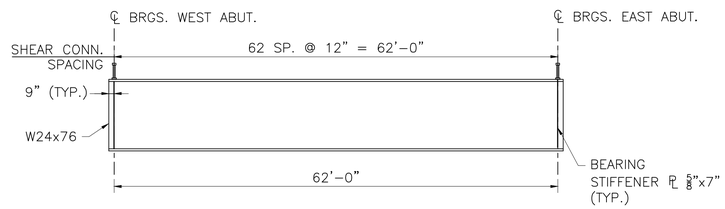

BEAM ELEVATION
HORIZ. SCALE: 1" = 10'–0"
VERT. SCALE: $\frac{1}{2}$" = 1'–0"

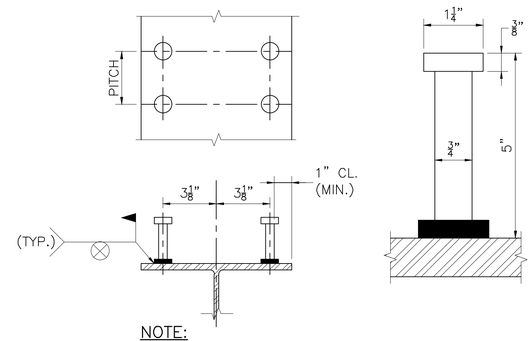

NOTE:
$\frac{7}{8}$" ø STUDS MAY BE SUBSTITUTED FOR $\frac{3}{4}$" ø STUDS BY ADJUSTING THE PITCH TO PROVIDE AN EQUIVALENT CROSS–SECTIONAL AREA PER FOOT.

STUD SHEAR CONNECTORS
NOT TO SCALE

CAMBER TABLE (INCHES)												
BM. NO.		SPAN NO. 1										
		℄ BRG. W. ABUT	0.1L	0.2L	0.3L	0.4L	0.5L	0.6L	0.7L	0.8L	0.9L	℄ BRG. E. ABUT
1	STEEL DL DEFLECTION	0.00	0.16	0.29	0.38	0.46	0.48	0.46	0.39	0.29	0.16	0.00
	CONC. DL DEFLECTION	0.00	0.90	1.64	2.21	2.62	2.75	2.63	2.25	1.64	0.90	0.00
	S.D.L. DEFLECTION	0.00	0.20	0.36	0.49	0.58	0.61	0.58	0.50	0.36	0.20	0.00
	VERT. CURVE CAMBER	0.00	0.00	0.00	0.00	0.00	0.00	0.00	0.00	0.00	0.00	0.00
	ADDITIONAL CAMBER	0.00	0.16	0.31	0.47	0.62	0.78	0.62	0.47	0.31	0.16	0.00
	TOTAL CAMBER	0.00	1.42	2.60	3.55	4.28	4.61	4.28	3.61	2.60	1.42	0.00
2	STEEL DL DEFLECTION	0.00	0.16	0.29	0.39	0.46	0.48	0.46	0.39	0.29	0.16	0.00
	CONC. DL DEFLECTION	0.00	0.88	1.61	2.17	2.57	2.69	2.57	2.21	1.61	0.88	0.00
	S.D.L. DEFLECTION	0.00	0.20	0.36	0.48	0.57	0.60	0.57	0.49	0.36	0.20	0.00
	VERT. CURVE CAMBER	0.00	0.00	0.00	0.00	0.00	0.00	0.00	0.00	0.00	0.00	0.00
	ADDITIONAL CAMBER	0.00	0.16	0.31	0.47	0.62	0.78	0.62	0.47	0.31	0.16	0.00
	TOTAL CAMBER	0.00	1.39	2.56	3.50	4.21	4.54	4.22	3.55	2.56	1.39	0.00
3	STEEL DL DEFLECTION	0.00	0.16	0.29	0.39	0.46	0.48	0.46	0.39	0.29	0.16	0.00
	CONC. DL DEFLECTION	0.00	0.87	1.57	2.12	2.52	2.64	2.52	2.16	1.57	0.87	0.00
	S.D.L. DEFLECTION	0.00	0.20	0.36	0.49	0.58	0.60	0.58	0.49	0.36	0.20	0.00
	VERT. CURVE CAMBER	0.00	0.00	0.00	0.00	0.00	0.00	0.00	0.00	0.00	0.00	0.00
	ADDITIONAL CAMBER	0.00	0.16	0.31	0.47	0.62	0.78	0.62	0.47	0.31	0.16	0.00
	TOTAL CAMBER	0.00	1.38	2.53	3.46	4.17	4.49	4.17	3.51	2.53	1.38	0.00
4	STEEL DL DEFLECTION	0.00	0.16	0.29	0.38	0.46	0.48	0.46	0.39	0.29	0.16	0.00
	CONC. DL DEFLECTION	0.00	0.85	1.54	2.08	2.47	2.59	2.47	2.12	1.54	0.85	0.00
	S.D.L. DEFLECTION	0.00	0.20	0.37	0.50	0.59	0.62	0.59	0.51	0.37	0.20	0.00
	VERT. CURVE CAMBER	0.00	0.00	0.00	0.00	0.00	0.00	0.00	0.00	0.00	0.00	0.00
	ADDITIONAL CAMBER	0.00	0.16	0.31	0.47	0.62	0.78	0.62	0.47	0.31	0.16	0.00
	TOTAL CAMBER	0.00	1.37	2.51	3.43	4.13	4.46	4.14	3.48	2.51	1.37	0.00

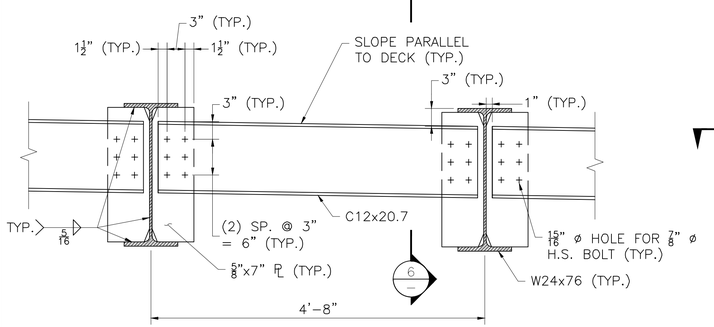

END DIAPHRAGM (D1) DETAILS
SCALE: 1" = 1'–0"

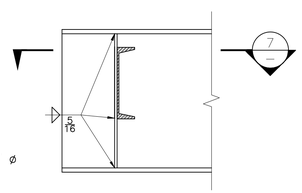

SECTION 6
SCALE: 1" = 1'–0"

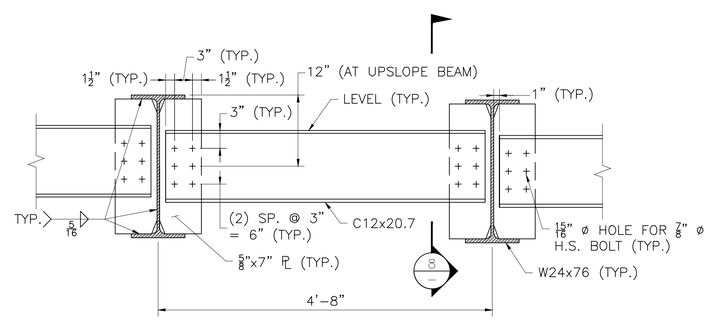

INTERMEDIATE DIAPHRAGM (D2) DETAILS
SCALE: 1" = 1'–0"

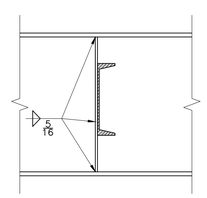

SECTION 8
SCALE: 1" = 1'–0"

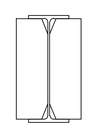

SECTION

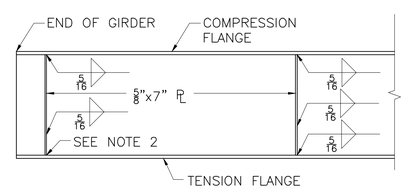

STIFFENER ATTACHMENT DETAILS
SCALE: $\frac{3}{4}$" = 1'–0"

NOTES:

1. SEE CLIP DETAIL ON THIS SHEET.
2. BEARING STIFFENER PLATE AT BOTTOM FLANGE SHALL BE MILLED FOR TIGHT FIT AND WELDED WITH $\frac{5}{16}$" FILLET WELDS BOTH SIDES OF PLATE.
3. ALL INTERMEDIATE STIFFENERS SHALL BE PERPENDICULAR TO THE WEB AND TO THE GIRDER FLANGES.
4. ALL BEARING STIFFENERS SHALL BE PLUMB.
5. ENDS OF BEAMS SHALL BE FABRICATED SO THAT UNDER FULL DEAD LOAD THE ENDS WILL BE PLUMB.

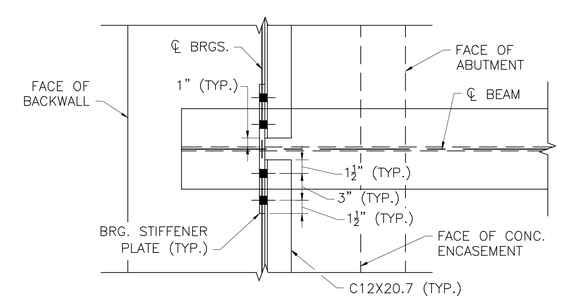

SECTION 7
SCALE: $1\frac{1}{2}$" = 1'–0"

MONTH DD, YYYY	ISSUED FOR CONSTRUCTION
DATE	DESCRIPTION
USE ONLY PRINTS OF LATEST DATE	

606223_BR12(C19037)-FRAMING PLAN.DWG Plotted on 26-Jun-2018 12:29 PM
First Structural Submittal (S1) 22-Jun-2018

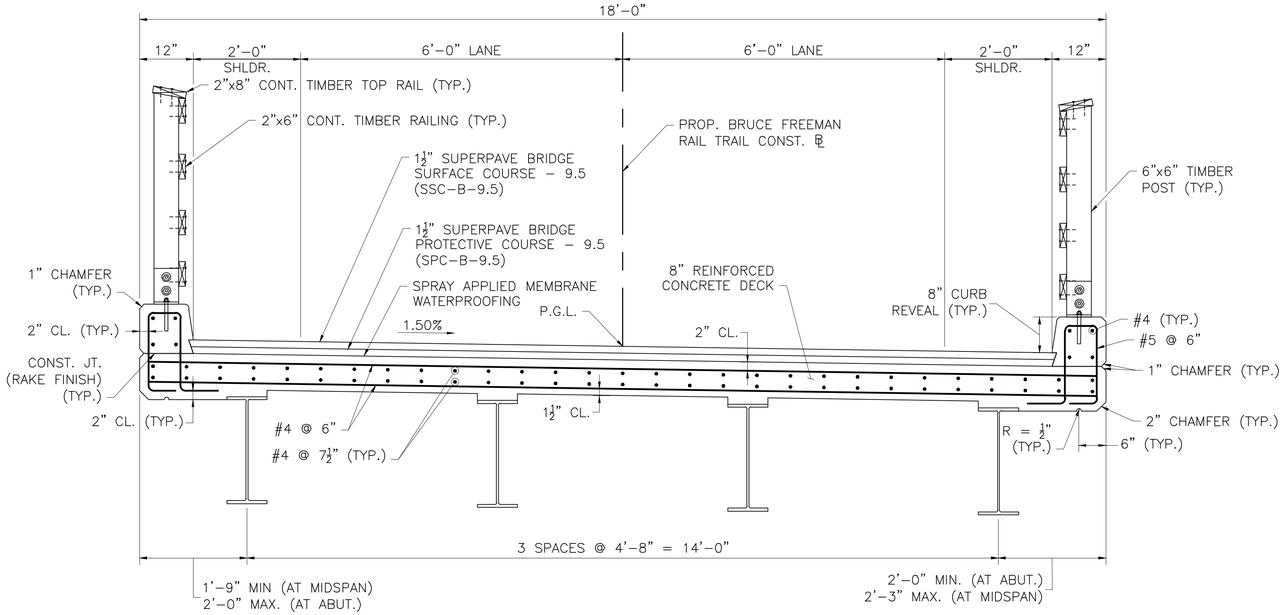

PROPOSED CROSS SECTION

SCALE: ¾" = 1'-0"

BEAM NO.	TOP OF FORM ELEVATIONS FOR DECK SLAB PRIOR TO PLACEMENT OF CONCRETE — INCREASING STATIONS →								
	℄ BRG. W. ABUT	1/8 PT.	1/4 PT.	3/8 PT.	1/2 PT.	5/8 PT.	3/4 PT.	7/8 PT.	℄ BRG. E. ABUT
1	144.78	144.54	144.28	144.00	143.67	143.30	142.89	142.46	142.00
2	144.85	144.61	144.35	144.06	143.74	143.37	142.96	142.52	142.07
3	144.93	144.68	144.42	144.13	143.80	143.43	143.02	142.59	142.13
4	145.00	144.76	144.49	144.20	143.87	143.50	143.09	142.66	142.20

NOTE:

AFTER THE BEAMS ARE ERECTED BUT BEFORE THE FORMS ARE BUILT, ELEVATIONS ON TOP OF THE FLANGE OF THE BEAMS ARE TO BE OBTAINED AT THE POINTS INDICATED IN THE TABLE. THE DIFFERENCE BETWEEN THE ELEVATIONS OBTAINED AND THOSE SHOWN IN THE TABLE GIVES THE ACTUAL BLOCKING DISTANCE FROM THE TOP OF BEAM TO THE BOTTOM OF THE SLAB AT CENTER LINE OF BEAM.

NOTES:

1. CONCRETE DECK SLAB AND CURB SHALL BE 4000 PSI, ¾ IN., 585 HP CEMENT CONCRETE.
2. LONGITUDINAL REINFORCEMENT SHALL BE PLACED PARALLEL TO THE ℄ OF CONSTRUCTION. TRANSVERSE (PRIMARY) REINFORCEMENT SHALL BE PLACED PERPENDICULAR TO THE ℄ OF CONSTRCUTION.
3. ALL REINFORCEMENT AND SUPPORT DEVICES SHALL BE COATED.
4. THE FINISHED SURFACE OF BRIDGE DECK SHALL BE SMOOTH AND WITHOUT ANY PROJECTIONS THAT COULD PUNCTURE THE MEMBRANE WATERPROOFING OR DEPRESSION THAT COULD RETAIN WATER.

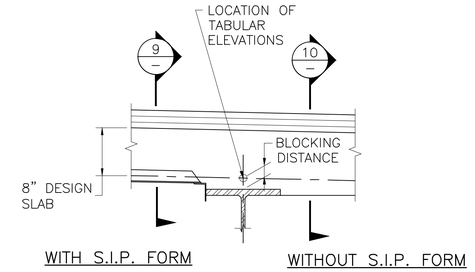

HAUNCH DETAIL

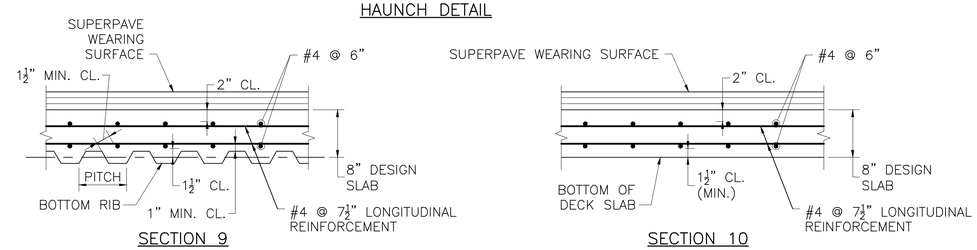

SECTION 9 SECTION 10

STAY-IN-PLACE FORM DETAILS

NOT TO SCALE

S.I.P FORM NOTES:

1. FOR 2" S.I.P. FORM, SET BOTTOM OF FORM 1" BELOW ELEVATION GIVEN IN TABLE. FOR 3" S.I.P. FORM, SET BOTTOM OF FORM 1½" BELOW TABLE ELEVATIONS.
2. FORM ENDS SHALL BE CRIMPED CLOSED IN A TAPERED MANNER. SEPARATE END CLOSURE PIECES WILL NOT BE ALLOWED.
3. SUPPORT ANGLES SHALL BE PLACED IN THE "LEG DOWN" POSITION WHERE POSSIBLE. WHERE "LEG UP" POSITION IS NECESSARY, THE UPPER MOST PORTION OF THE ANGLE SHALL NOT PROJECT MORE THAN 1" ABOVE THE TOP FLANGE OR COVER PLATE. THE CONTRACTOR SHALL HAVE AN ASSORTMENT OF ANGLES OF VARIOUS SIZES AVAILABLE ON THE SITE TO CONFORM TO THIS REQUIREMENT.
4. ALL MAIN STEEL REINFORCEMENT IN THE LOWER MAT SHALL BE CENTERED OVER THE VALLEY OF THE S.I.P. FORM.
5. CONTRACTOR SHALL DESIGN AND DETAIL ALL ELEMENTS OF THE FORMING SYSTEM AND SHALL SUBMIT TO THE ENGINEER FOR APPROVAL.
6. IN CASES WHERE STANDARD 2" OR 3" DEEP S.I.P. FORMS DO NOT SATISFY DESIGN REQUIREMENTS AN ALTERNATIVE FORMING SYSTEM CONSISTING OF DEEPER S.I.P. FORMS OR REMOVABLE FORMS SHALL BE DESIGNED AND DETAILED BY THE CONTRACTOR AND SUBMITTED TO THE ENGINEER FOR APPROVAL. THE DESIGN THICKNESS OF THE SLAB SHALL NOT BE REDUCED.
7. S.I.P FORMS SHALL NOT BE USED TO FORM OVERHANGS.

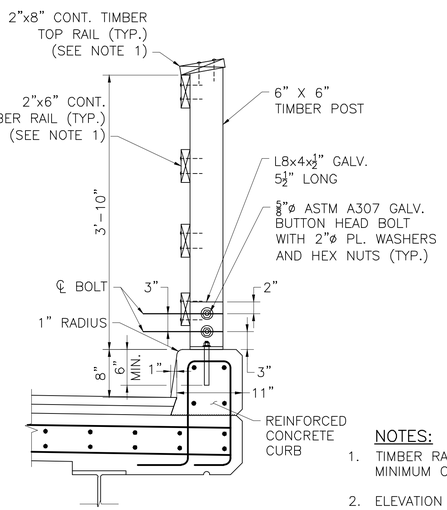

TRANSVERSE SECTION

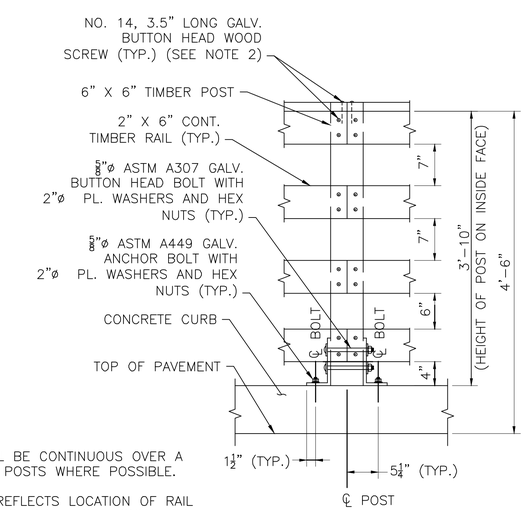

ELEVATION

NOTES:

1. TIMBER RAILS SHALL BE CONTINUOUS OVER A MINIMUM OF THREE POSTS WHERE POSSIBLE.
2. ELEVATION SHOWN REFLECTS LOCATION OF RAIL BUTT JOINT, AT INTERMEDIATE JOINT ONLY TWO WOOD SCREWS REQUIRED PER RAILING.

TIMBER BRIDGE RAILING DETAILS

SCALE: 1" = 1'-0"

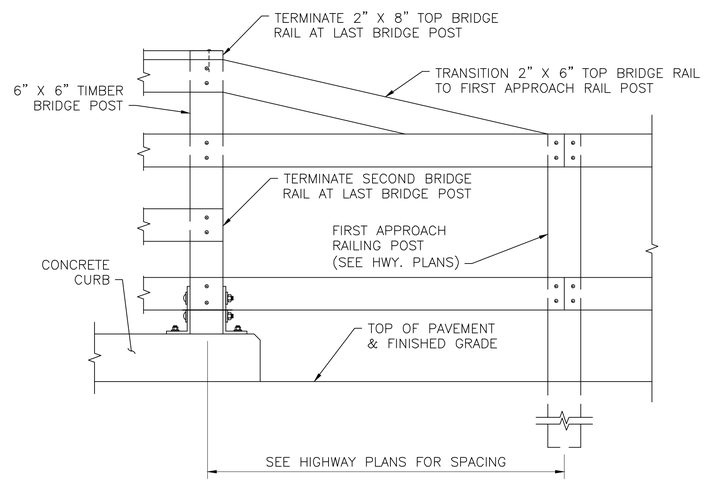

TIMBER BRIDGE RAILING TRANSITION TO APPROACH RAILING

SCALE: 1" = 1'-0"

ACTON & CONCORD
BRUCE FREEMAN RAIL TRAIL PHASE 2B

STATE	FED. AID PROJ. NO.	SHEET NO.	TOTAL SHEETS
MA	–	113	146
PROJECT FILE NO. 606223			

DECK & TIMBER RAILING DETAILS

DATE	DESCRIPTION
MONTH DD, YYYY	ISSUED FOR CONSTRUCTION
USE ONLY PRINTS OF LATEST DATE	

606223_BR13(C19037)-DECK & RAIL.DWG Plotted on 26-Jun-2018 12:29 PM
First Structural Submittal (S1) 22-Jun-2018

ACTON & CONCORD
BRUCE FREEMAN RAIL TRAIL PHASE 2B

STATE	FED. AID PROJ. NO.	SHEET NO.	TOTAL SHEETS
MA	–	114	146
PROJECT FILE NO. 606223			

BEARING DETAILS

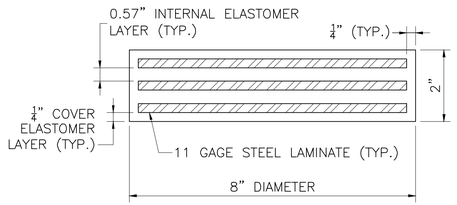

ELASTOMERIC BEARING PAD

SCALE: N.T.S.

NOTES:

1. ELASTOMER SHALL HAVE A SHEAR MODULUS OF 0.160 KSI.
2. STEEL LAMINATES SHALL CONFORM TO ASTM A 1011 GRADE 36.
3. THE COMPRESSIVE DESIGN LOAD ON THE BEARING PAD IS 45.5 KIPS. THE COMPRESSIVE DESIGN STRESS IS THE RESULT OF DIVIDING THE COMPRESSIVE DESIGN LOAD BY THE AREA OF THE PAD AND IS EQUAL TO 0.90 KSI.
4. ELASTOMERIC BEARING PAD SHALL NOT BE VULCANIZED TO THE SOLE PLATE.

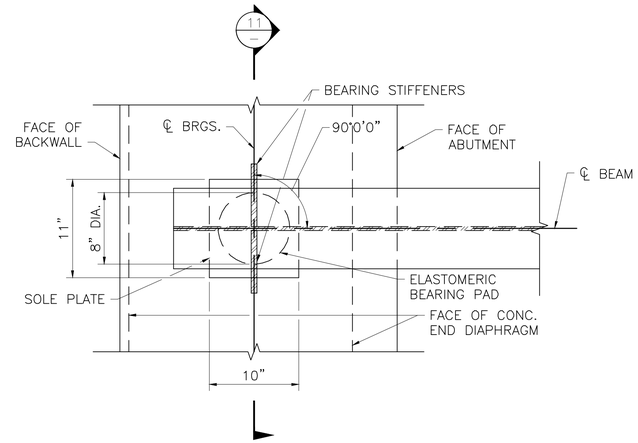

PLAN

SCALE: 1 1/2" = 1'-0"

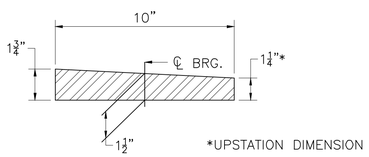

SOLE PLATE DETAIL

SCALE: 3" = 1'-0"

SOLE PLATE NOTES:

1. STEEL SOLE PLATE SHALL CONFORM TO AASHTO M 270 GRADE 36 AND SHALL BE HOT-DIP GALVANIZED.
2. CENTER THE ELASTOMERIC PAD UNDER THE SOLE PLATE DURING BEAM ERECTION.
3. BEAMS SHALL BE ERECTED WHEN THE AMBIENT TEMPERATURE IS BETWEEN 50°F AND 77°F. IF BEAMS ARE ERECTED AT OTHER AMBIENT TEMPERATURES, THEY WILL HAVE TO BE JACKED AND THE ELASTOMERIC BEARINGS RE-CENTERED WHEN THE TEMPERATURE RETURNS TO THAT RANGE.

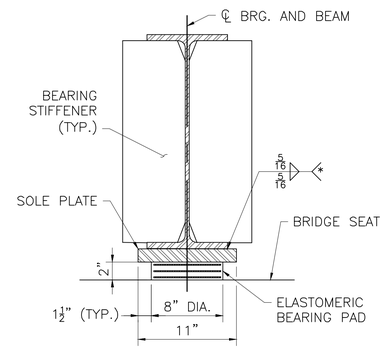

(*) – WELDS SHALL TERMINATE 1/4" FROM EDGE OF PLATE

SECTION 11

SCALE: 1 1/2" = 1'-0"

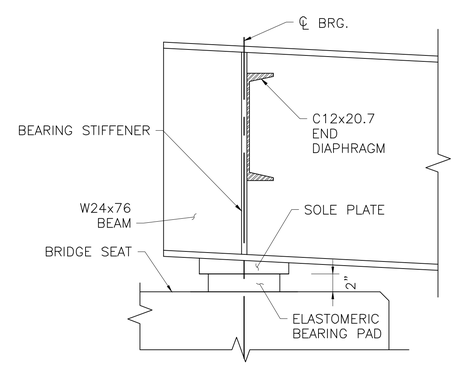

ELEVATION

SCALE: 1 1/2" = 1'-0"

MONTH DD, YYYY	ISSUED FOR CONSTRUCTION
DATE	DESCRIPTION
USE ONLY PRINTS OF LATEST DATE	

606223_BR14(C19037)-BEARING DETAILS.DWG Plotted on 26-Jun-2018 12:29 PM
First Structural Submittal (S1) 22-Jun-2018

HOR. SCALE IN FEET
4 0 4 8
4 0 4 8
VER. SCALE IN FEET

ACTON & CONCORD
BRUCE FREEMAN RAIL TRAIL PHASE 2B

STATE	FED. AID PROJ. NO.	SHEET NO.	TOTAL SHEETS
MA	-	115	146
PROJECT FILE NO.	606223		

CROSS SECTIONS

606223_HD_(XS).DWG Plotted on 22-Jun-2018 5:48 PM

9+50

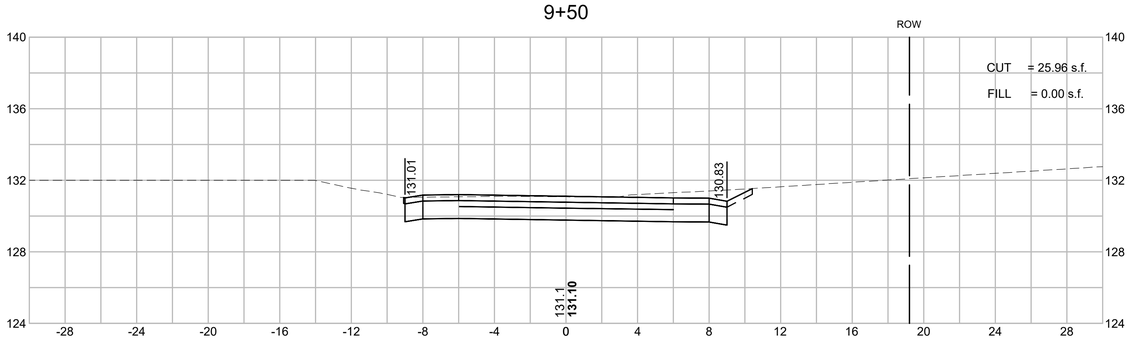

11+00

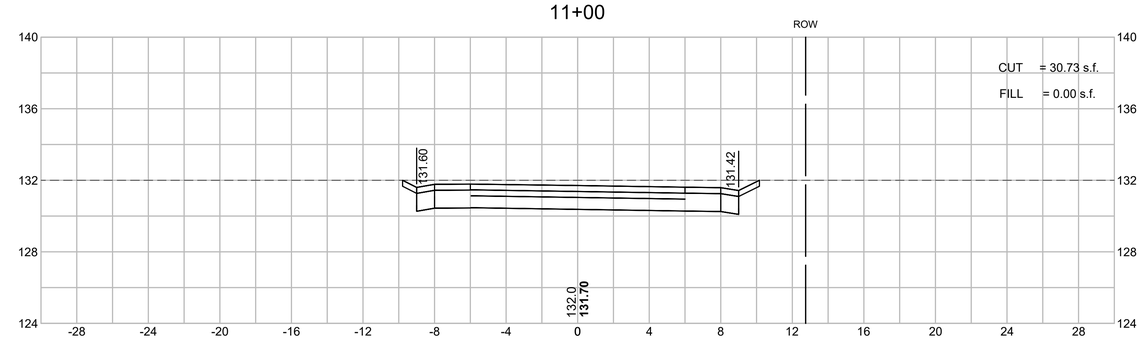

9+00

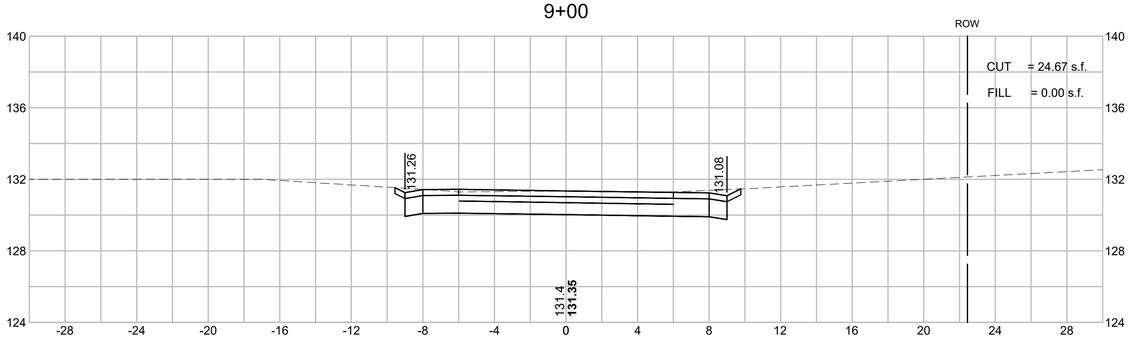

10+50

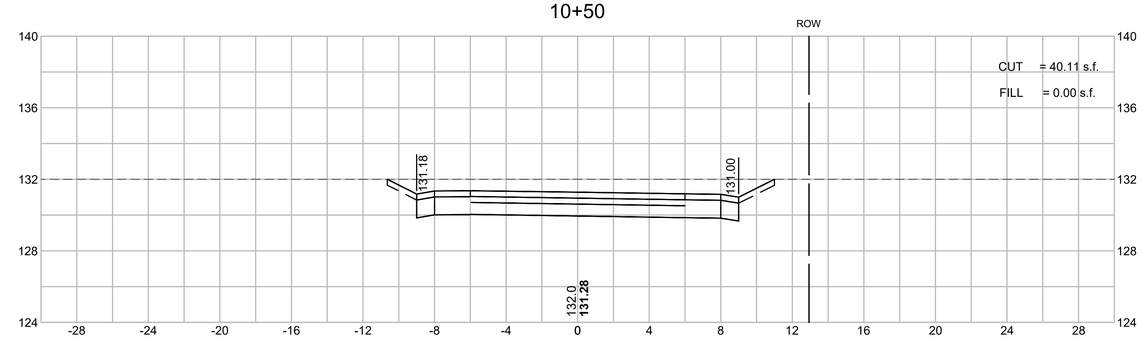

8+50

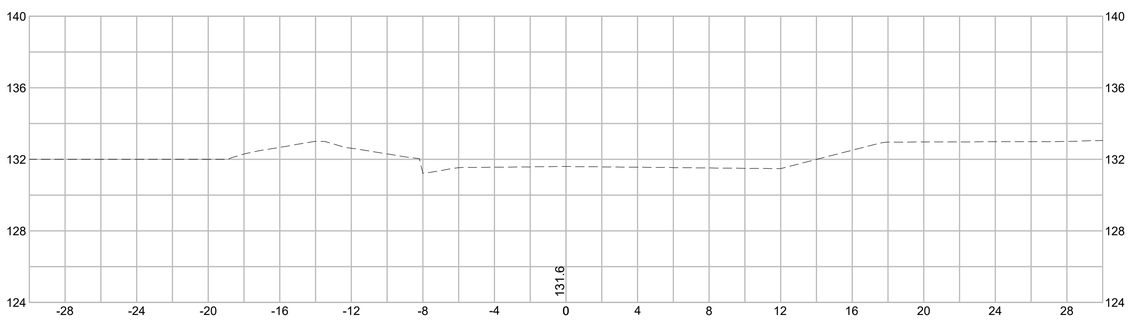

10+00

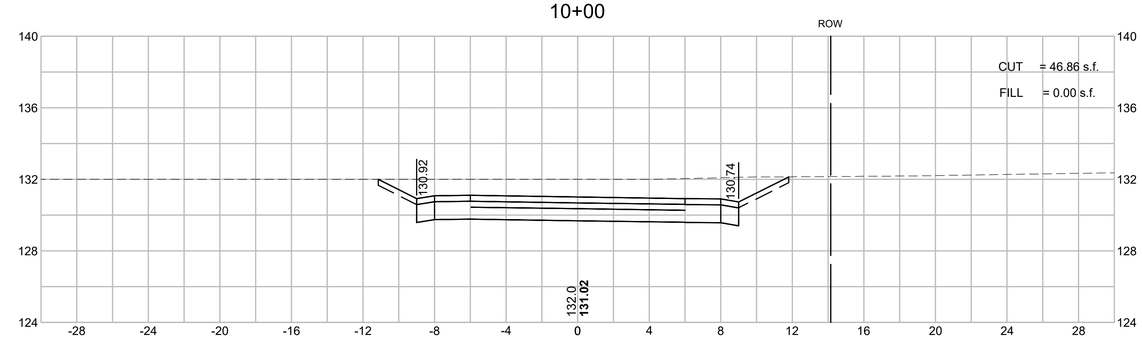

HOR. SCALE IN FEET

4 0 4 8

4 0 4 8

VER. SCALE IN FEET

ACTON & CONCORD
BRUCE FREEMAN RAIL TRAIL PHASE 2B

STATE	FED. AID PROJ. NO.	SHEET NO.	TOTAL SHEETS
MA	-	116	146
PROJECT FILE NO.	606223		

CROSS SECTIONS

12+50

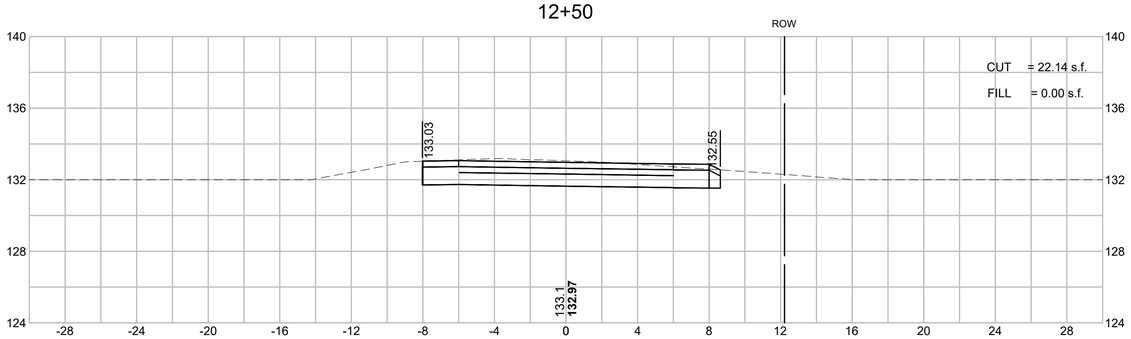

14+00

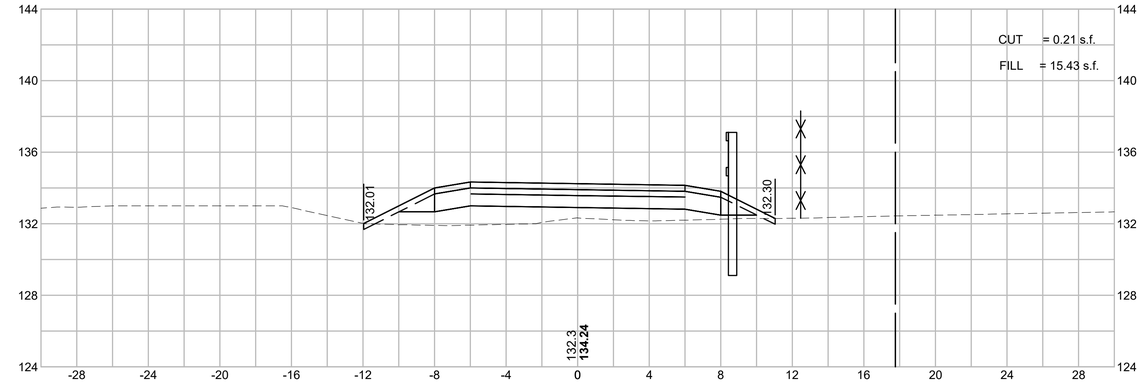

12+00

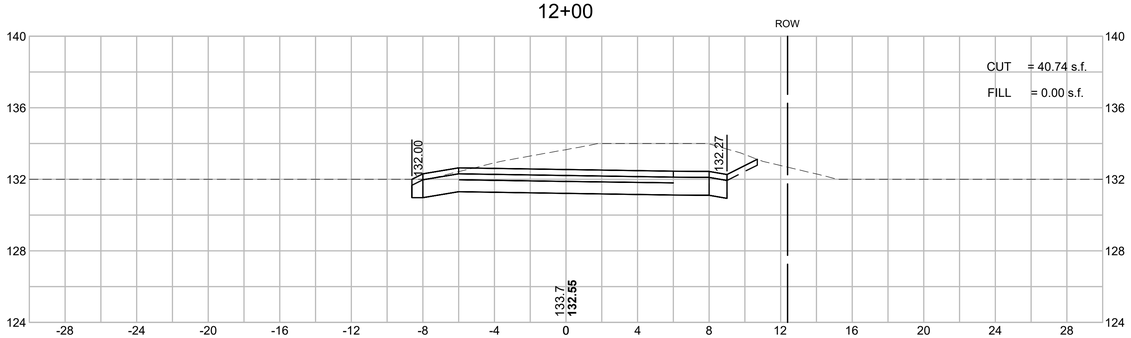

13+50

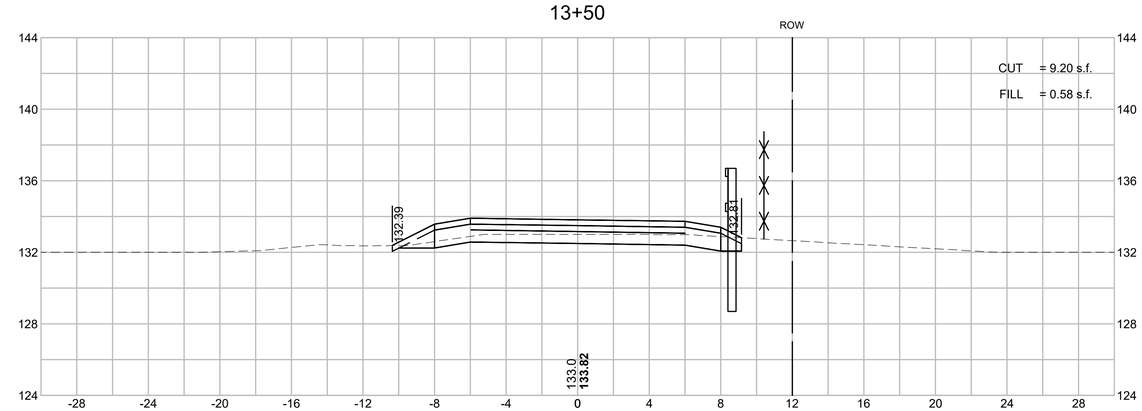

11+50

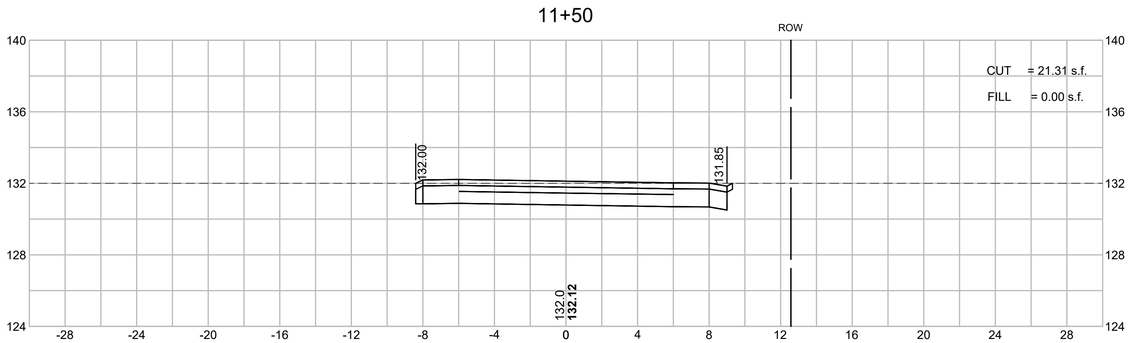

13+00

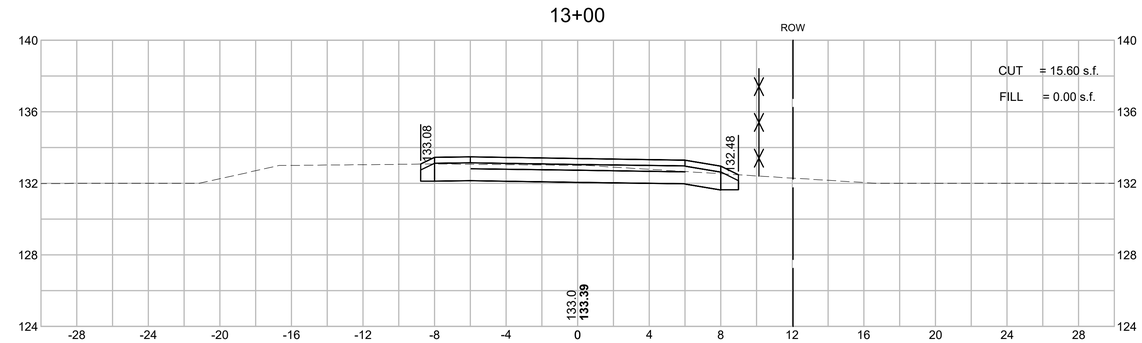

606223_HD_(XS).DWG Plotted on 22-Jun-2018 5:49 PM

ACTON & CONCORD
BRUCE FREEMAN RAIL TRAIL PHASE 2B

STATE	FED. AID PROJ. NO.	SHEET NO.	TOTAL SHEETS
MA	-	117	146
PROJECT FILE NO.	606223		

CROSS SECTIONS

HOR. SCALE IN FEET
4 0 4 8
VER. SCALE IN FEET
4 0 4 8

15+50

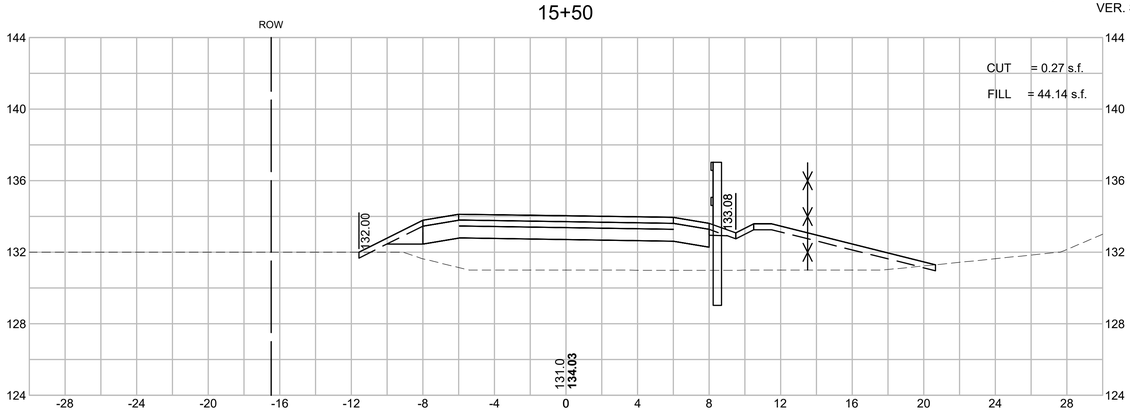

17+00

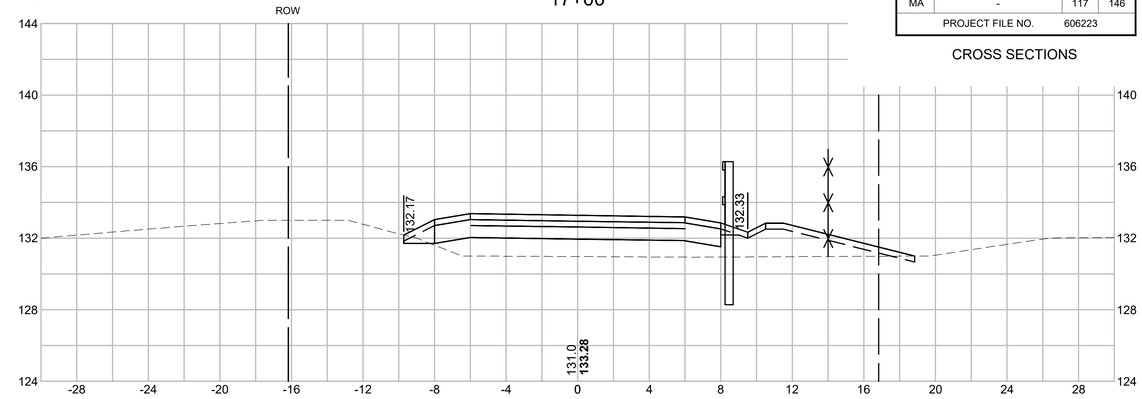

15+00

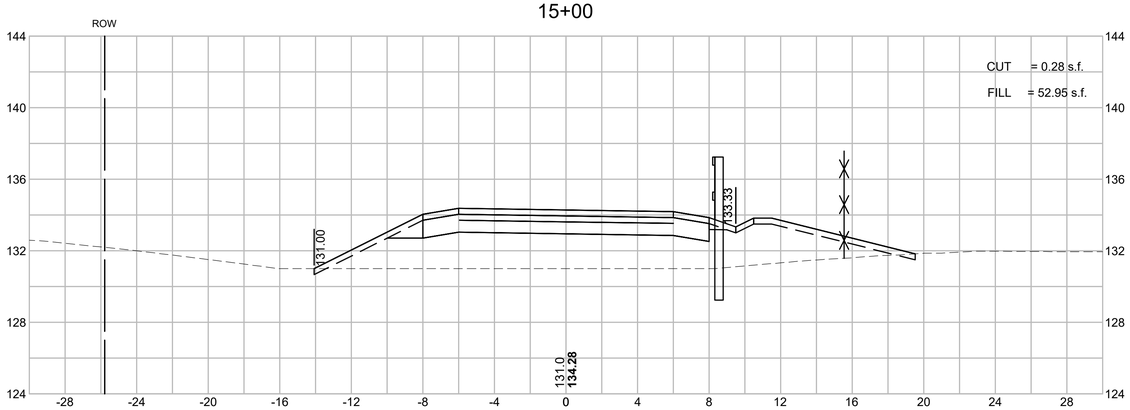

16+50

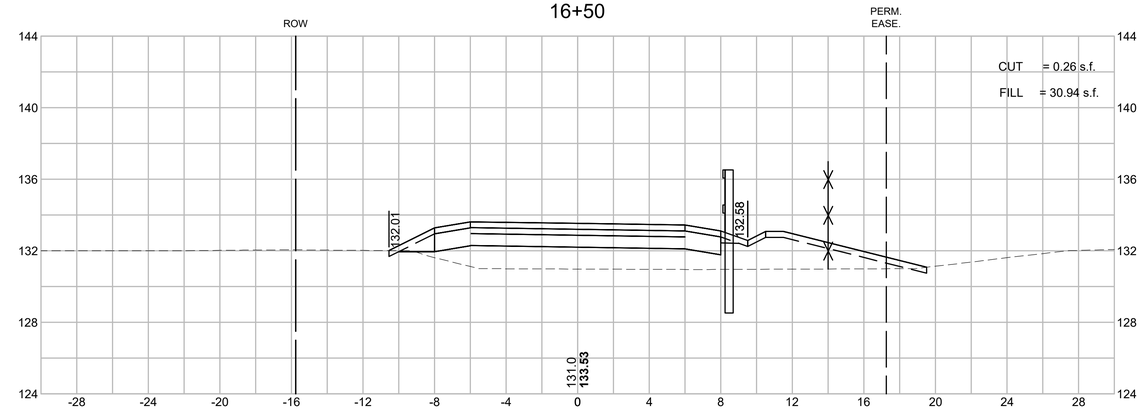

14+50

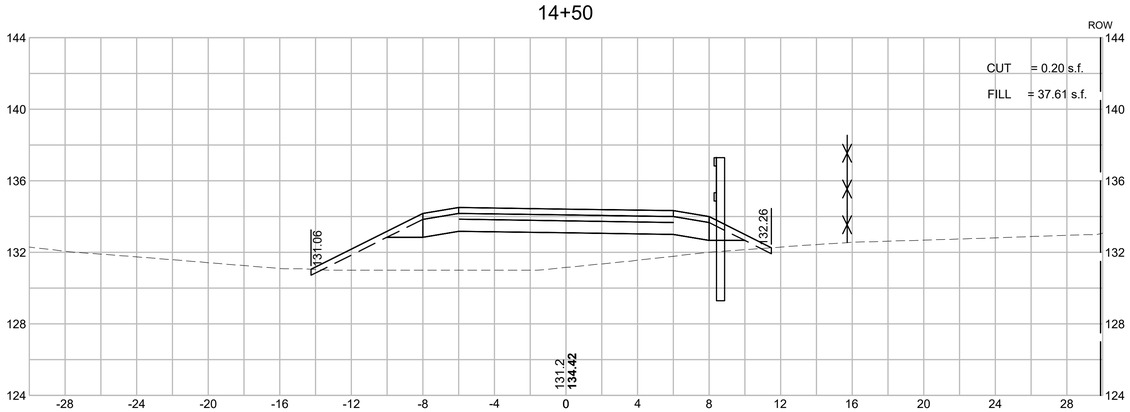

16+00

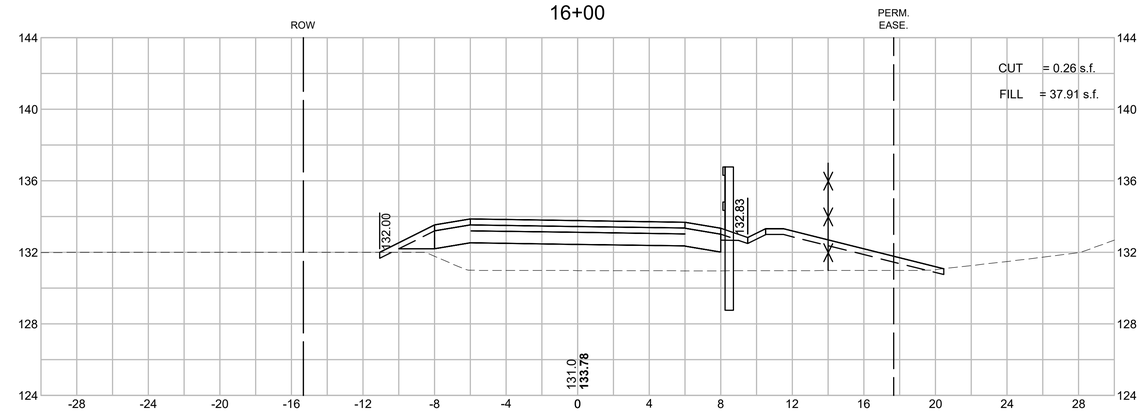

606223_HD_(XS).DWG Plotted on 22-Jun-2018 5:49 PM

HOR. SCALE IN FEET
4 0 4 8
4 0 4 8
VER. SCALE IN FEET

ACTON & CONCORD
BRUCE FREEMAN RAIL TRAIL PHASE 2B

STATE	FED. AID PROJ. NO.	SHEET NO.	TOTAL SHEETS
MA	-	118	146
PROJECT FILE NO.	606223		

CROSS SECTIONS

18+50

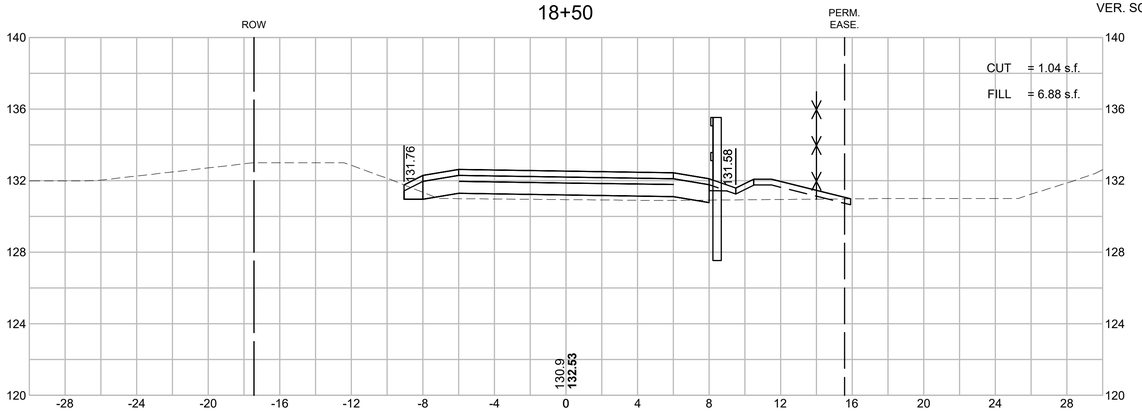

20+00

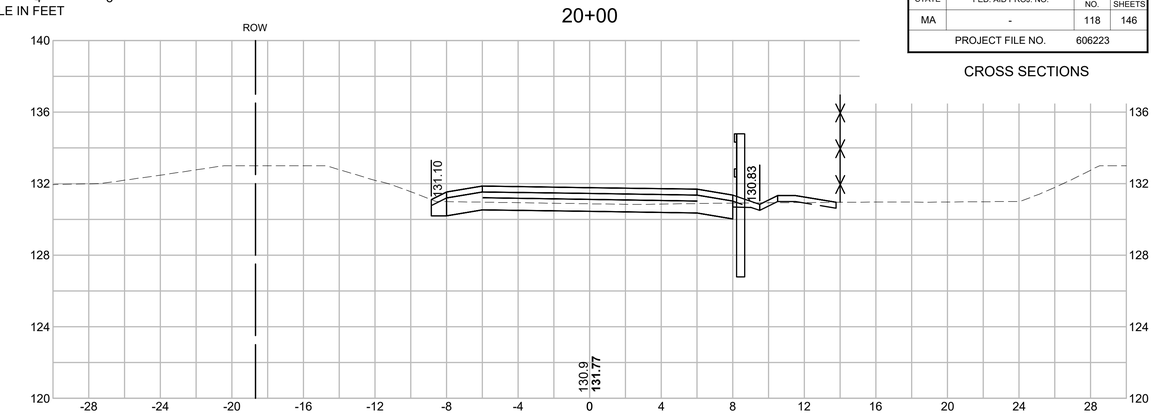

18+00

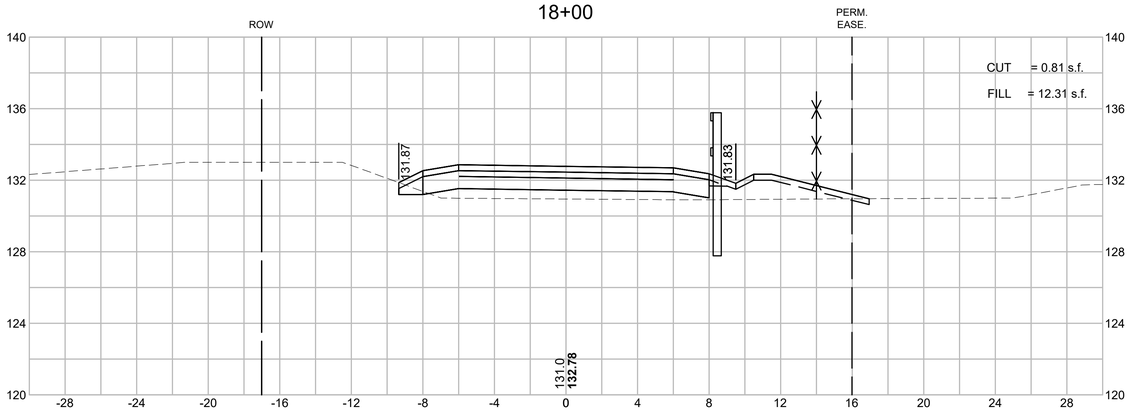

19+50

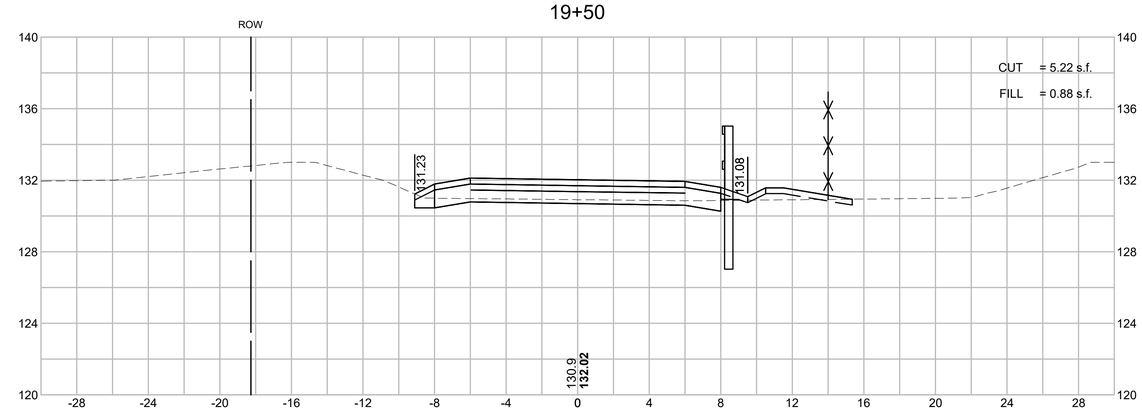

17+50

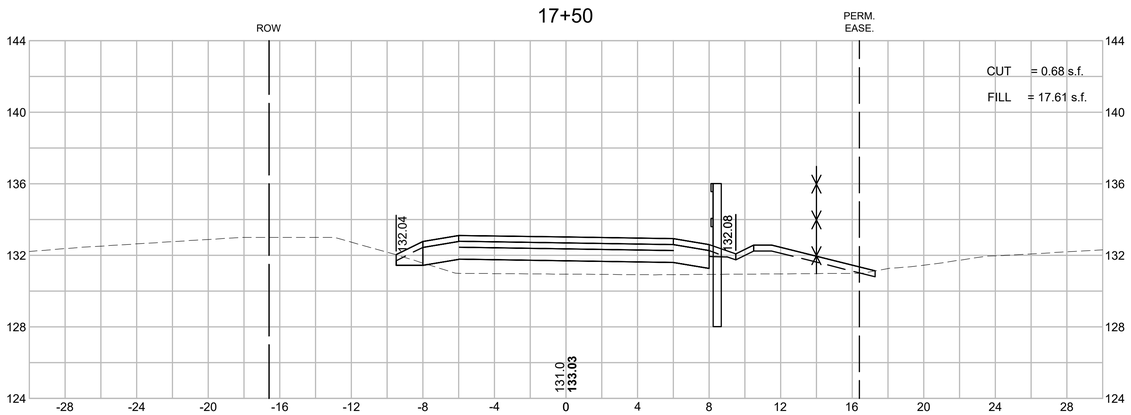

19+00

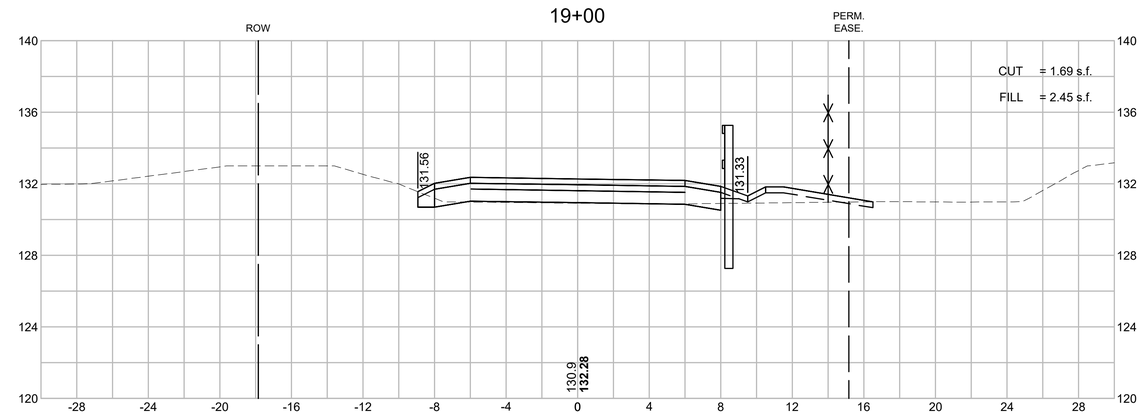

606223_HD_(XS).DWG Plotted on 22-Jun-2018 5:50 PM

HOR. SCALE IN FEET
4 0 4 8
4 0 4 8
VER. SCALE IN FEET

ACTON & CONCORD
BRUCE FREEMAN RAIL TRAIL PHASE 2B

STATE	FED. AID PROJ. NO.	SHEET NO.	TOTAL SHEETS
MA	-	119	146
PROJECT FILE NO.	606223		

CROSS SECTIONS

606223_HD_(XS).DWG Plotted on 22-Jun-2018 5:50 PM

21+00

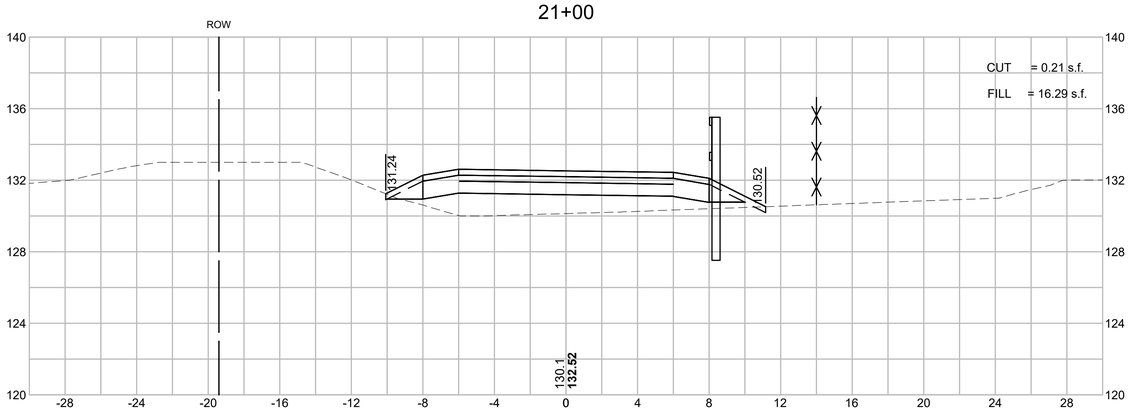

22+00

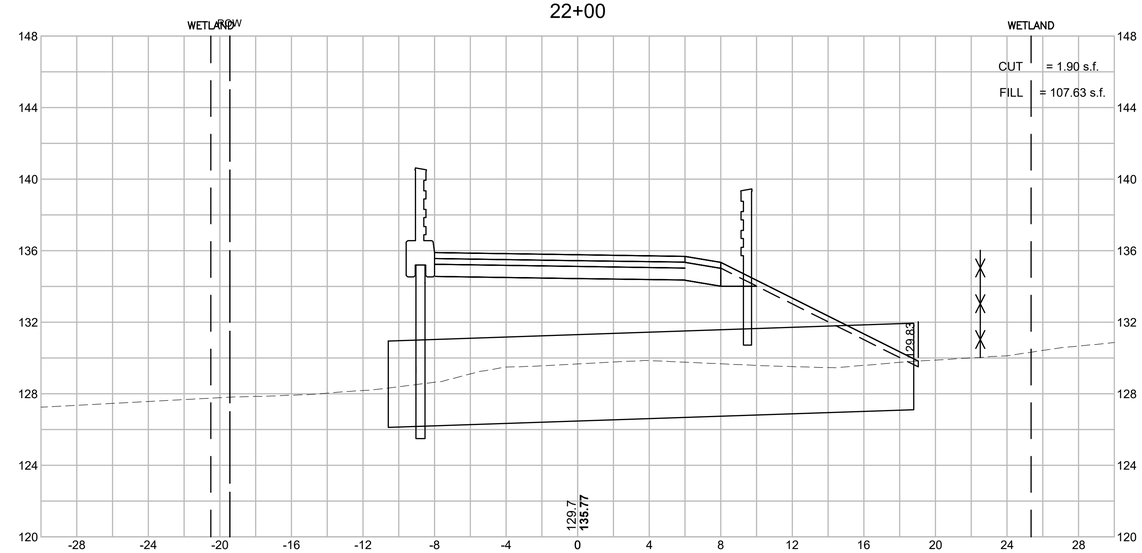

20+50

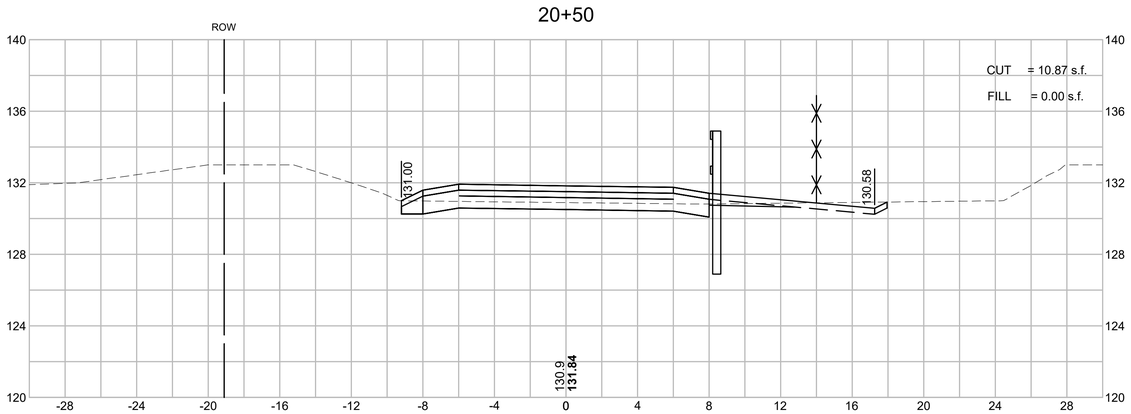

21+50

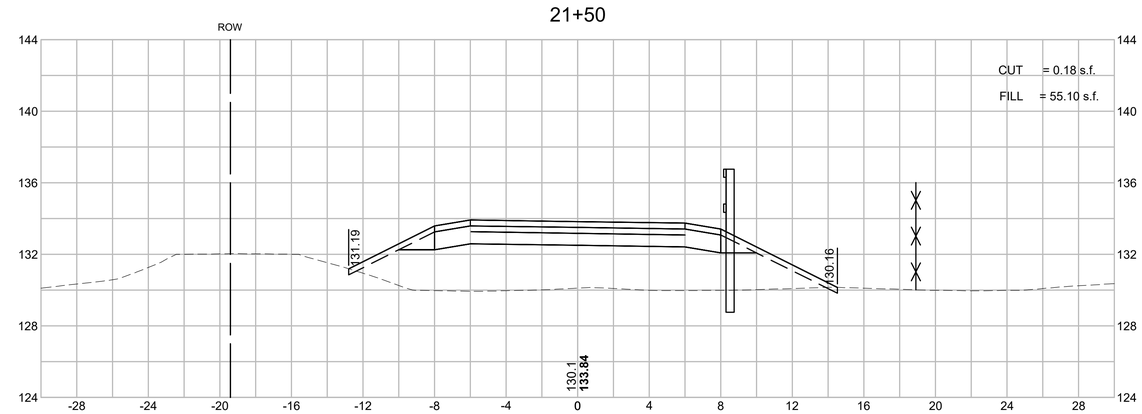

ACTON & CONCORD
BRUCE FREEMAN RAIL TRAIL PHASE 2B

STATE	FED. AID PROJ. NO.	SHEET NO.	TOTAL SHEETS
MA	-	120	146
PROJECT FILE NO.	606223		

CROSS SECTIONS

HOR. SCALE IN FEET
4 0 4 8
4 0 4 8
VER. SCALE IN FEET

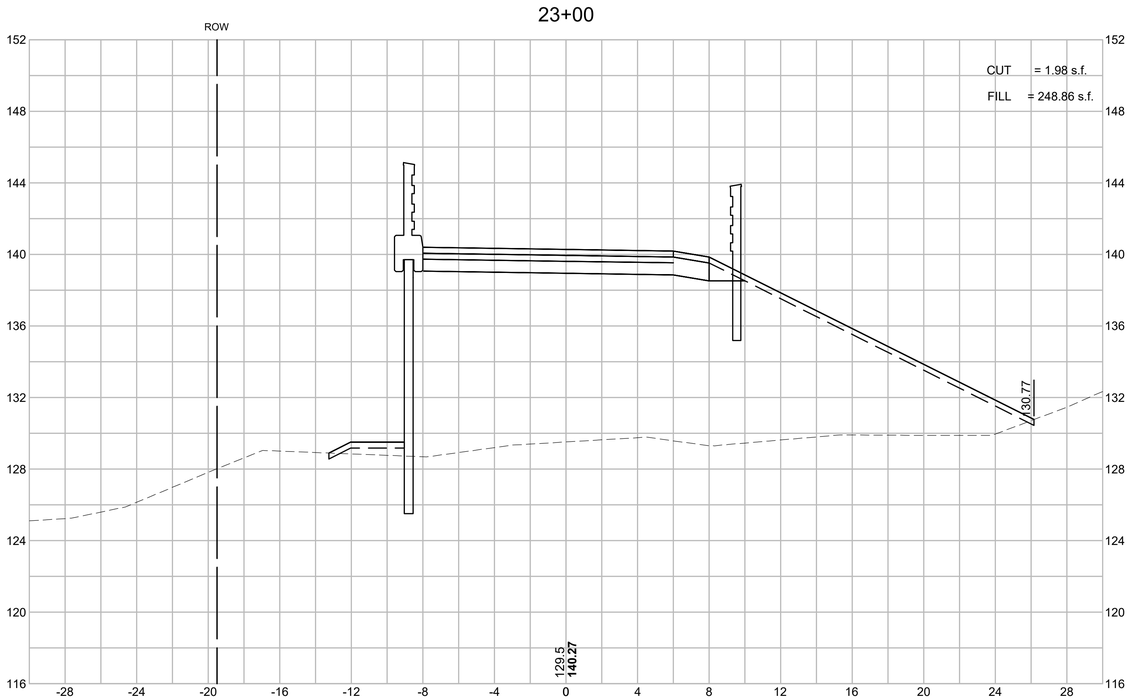

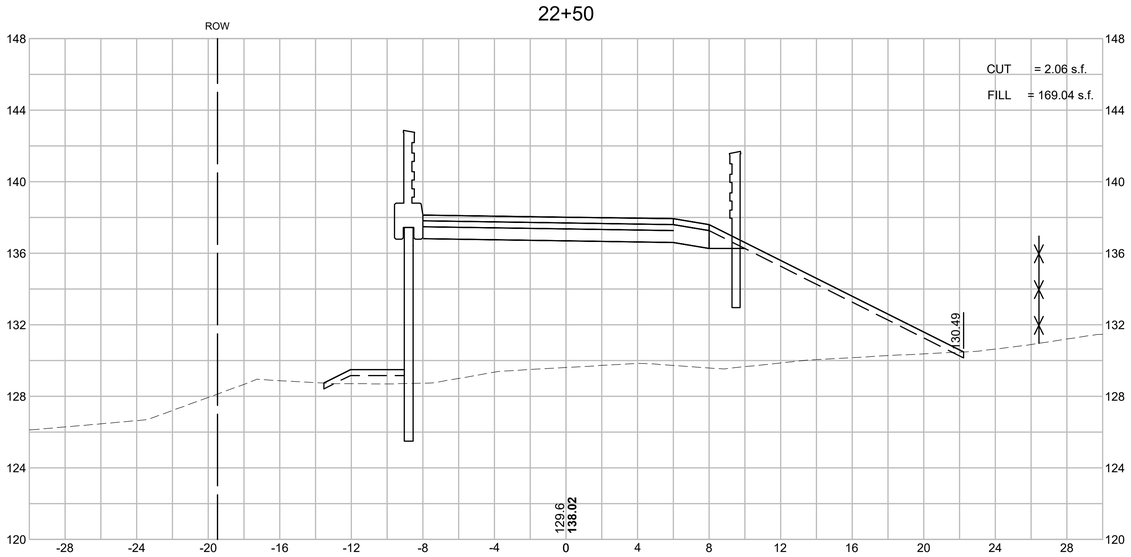

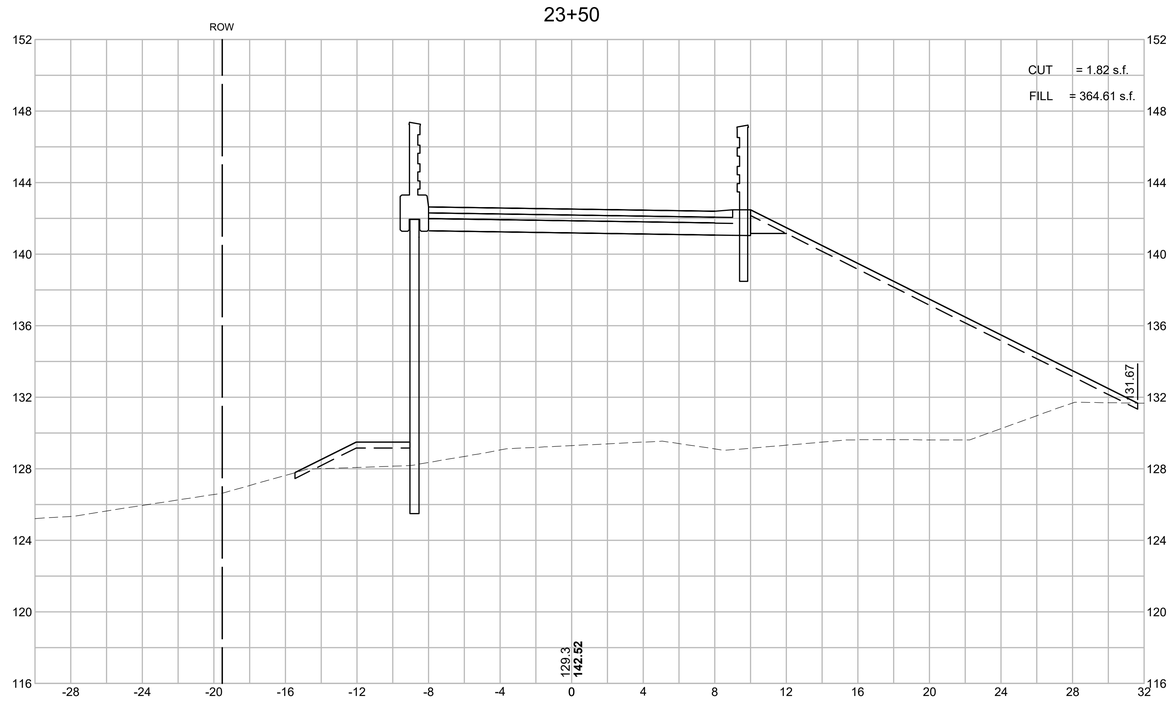

606223_HD_(XS).DWG Plotted on 22-Jun-2018 5:51 PM

HOR. SCALE IN FEET

4 0 4 8

4 0 4 8

VER. SCALE IN FEET

ACTON & CONCORD
BRUCE FREEMAN RAIL TRAIL PHASE 2B

STATE	FED. AID PROJ. NO.	SHEET NO.	TOTAL SHEETS
MA	-	121	146
PROJECT FILE NO.	606223		

CROSS SECTIONS

606223_HD_(XS).DWG Plotted on 22-Jun-2018 5:51 PM

24+00

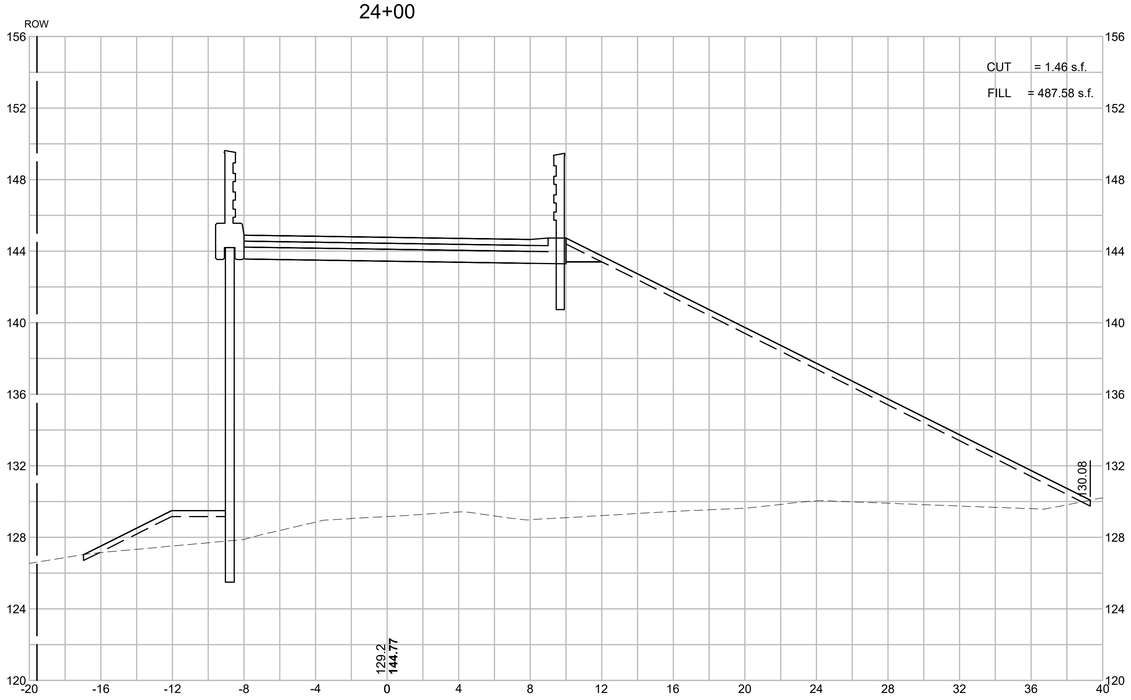

24+50

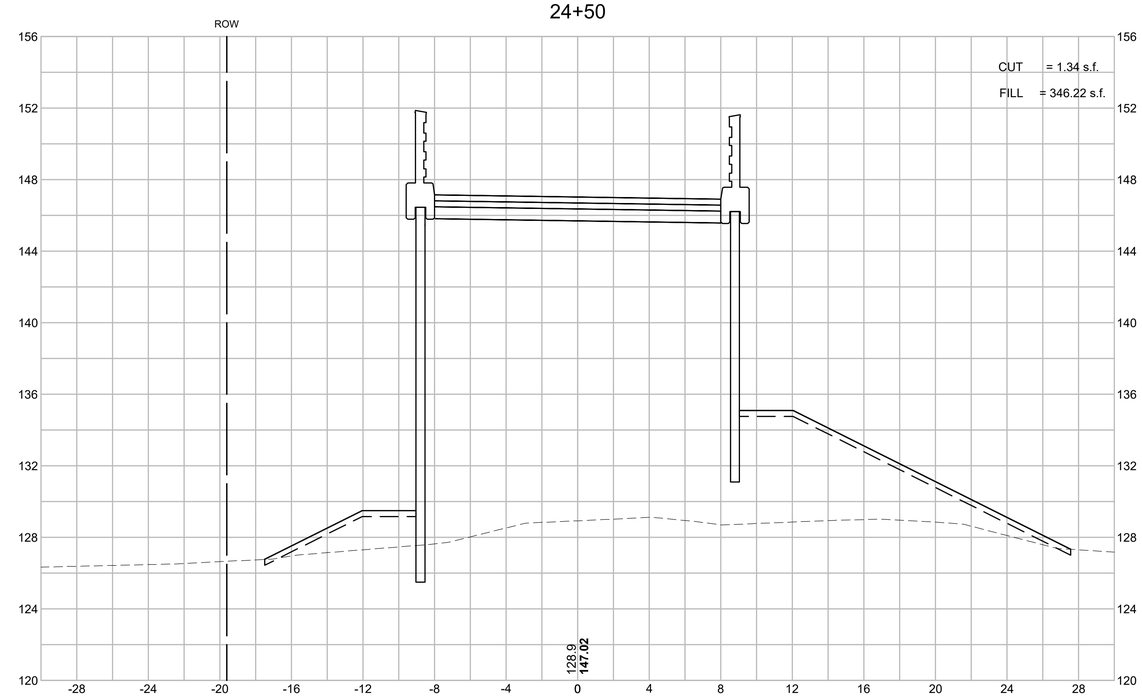

HOR. SCALE IN FEET
4 0 4 8
4 0 4 8
VER. SCALE IN FEET

ACTON & CONCORD
BRUCE FREEMAN RAIL TRAIL PHASE 2B

STATE	FED. AID PROJ. NO.	SHEET NO.	TOTAL SHEETS
MA	-	122	146
PROJECT FILE NO.	606223		

CROSS SECTIONS

606223_HD_(XS).DWG Plotted on 22-Jun-2018 5:52 PM

25+00

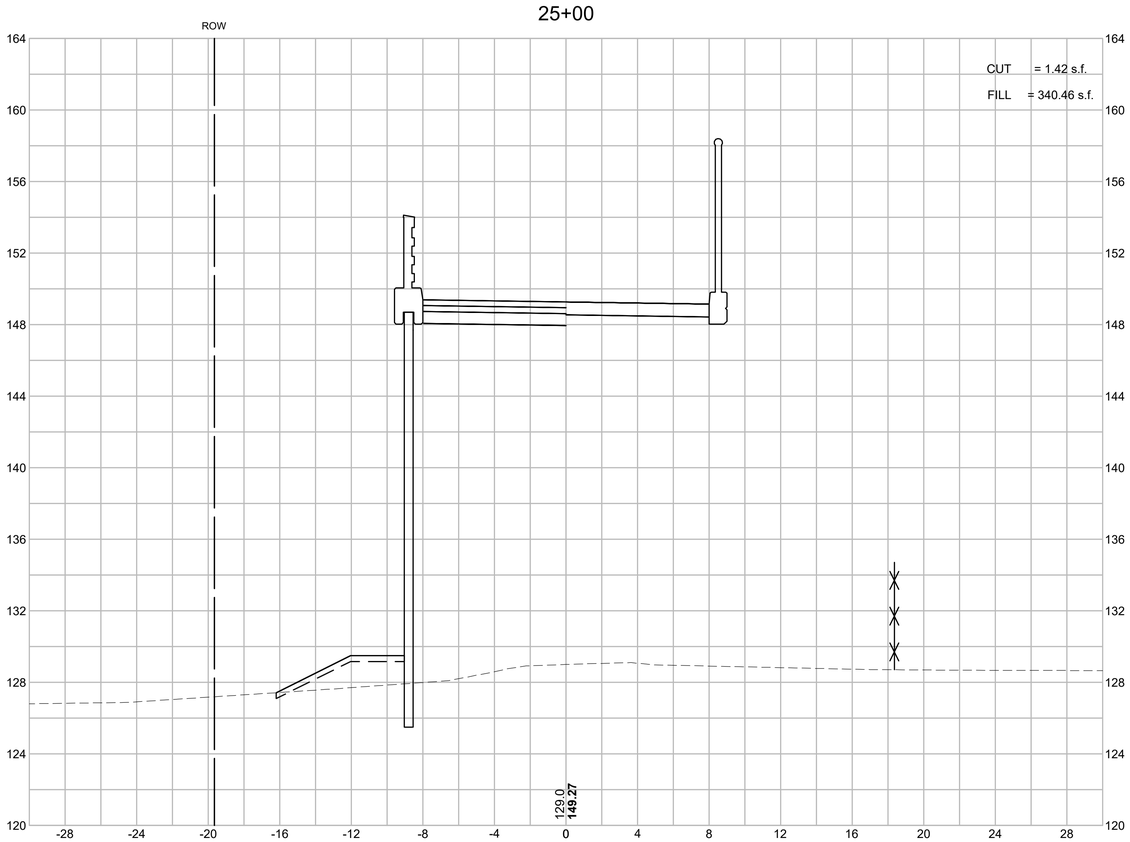

25+50

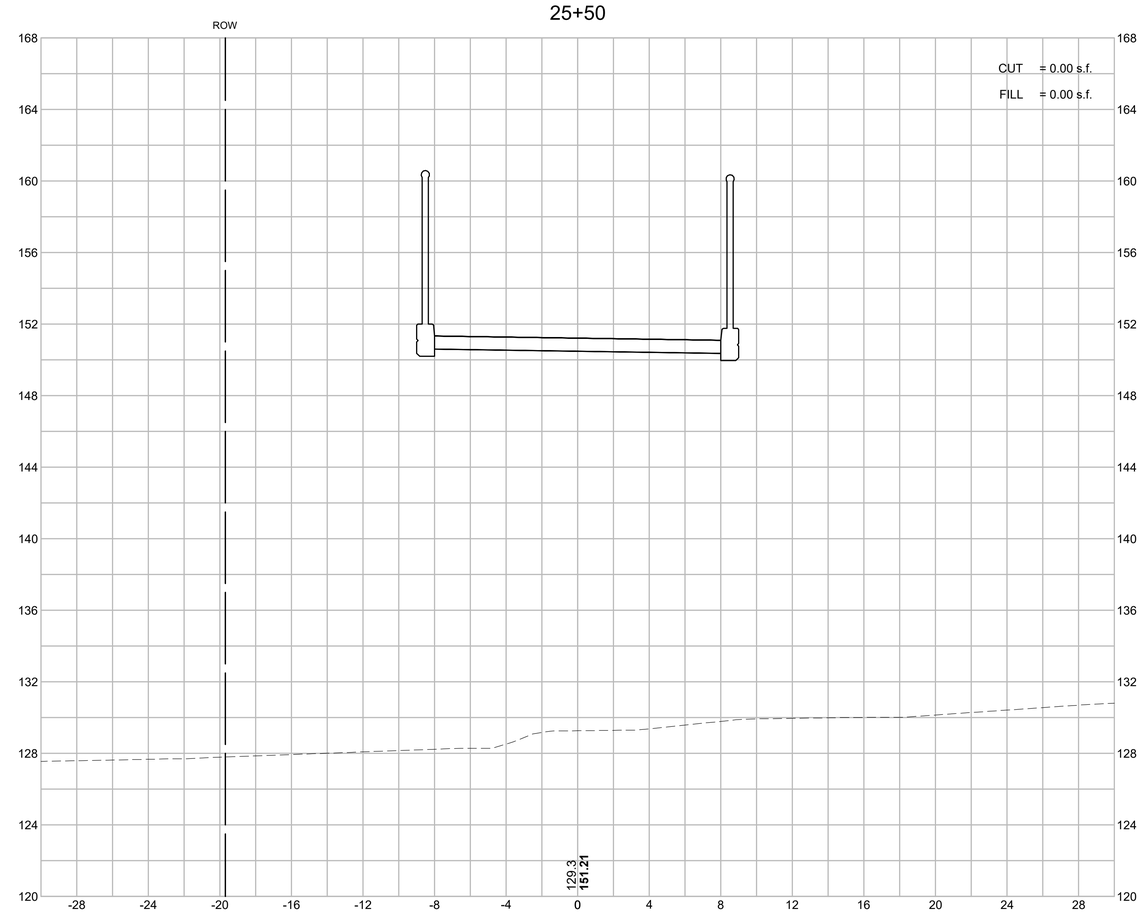

HOR. SCALE IN FEET
4 0 4 8
4 0 4 8
VER. SCALE IN FEET

ACTON & CONCORD
BRUCE FREEMAN RAIL TRAIL PHASE 2B

STATE	FED. AID PROJ. NO.	SHEET NO.	TOTAL SHEETS
MA	-	123	146
PROJECT FILE NO.	606223		

CROSS SECTIONS

606223_HD_(XS).DWG Plotted on 22-Jun-2018 5:52 PM

26+00

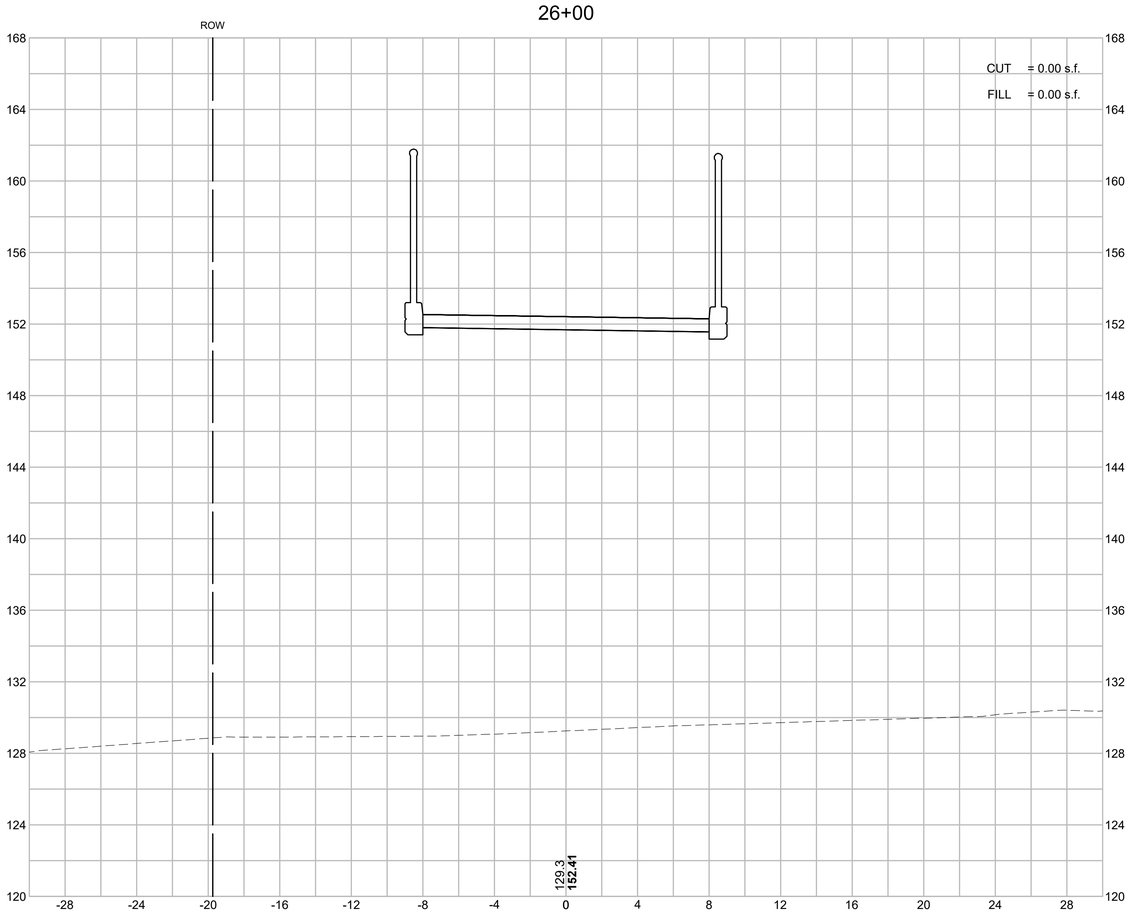

26+50

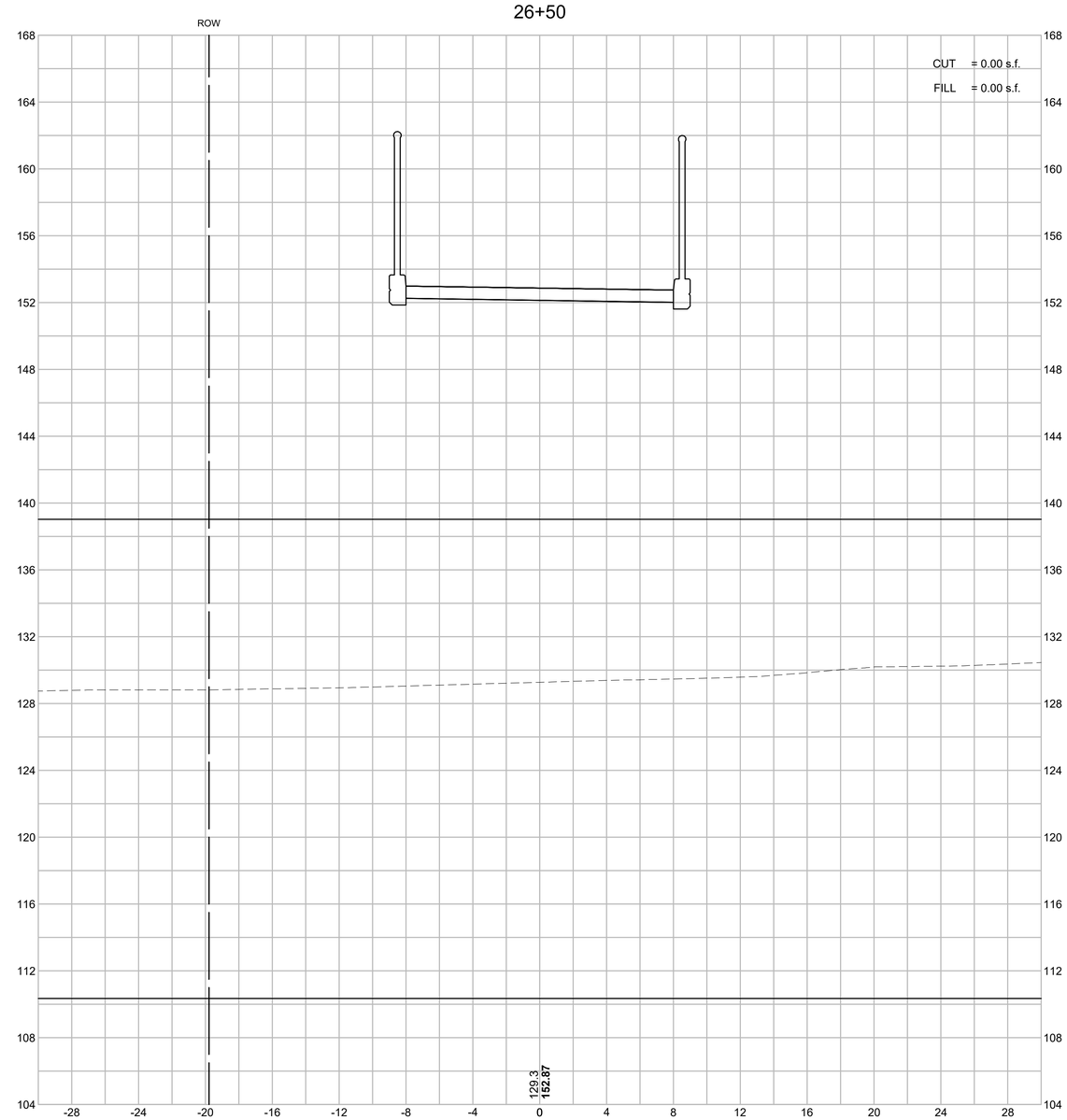

HOR. SCALE IN FEET
4 0 4 8
4 0 4 8
VER. SCALE IN FEET

ACTON & CONCORD
BRUCE FREEMAN RAIL TRAIL PHASE 2B

STATE	FED. AID PROJ. NO.	SHEET NO.	TOTAL SHEETS
MA	-	124	146
PROJECT FILE NO.	606223		

CROSS SECTIONS

606223_HD_(XS).DWG Plotted on 22-Jun-2018 5:53 PM

27+00

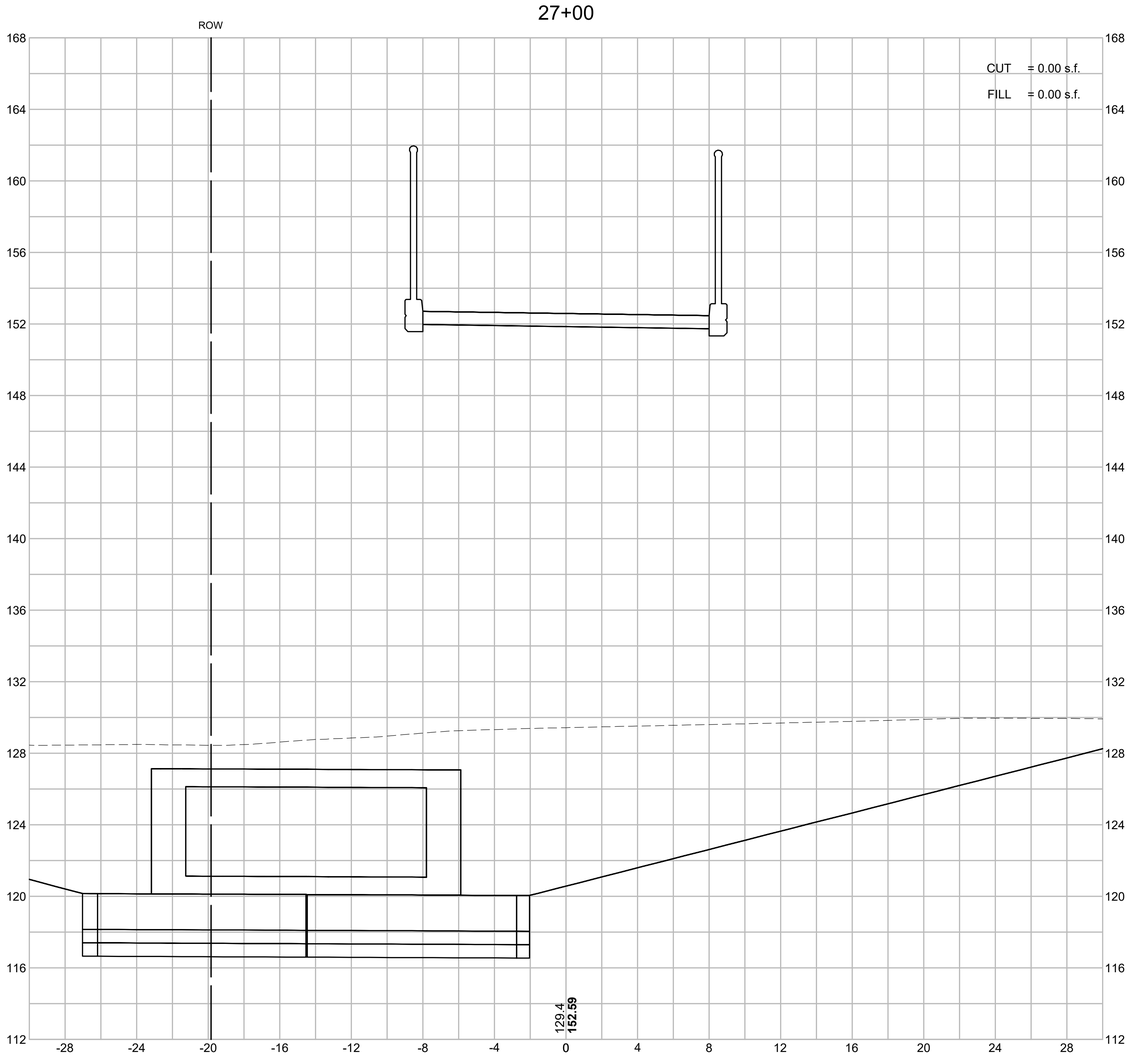

27+50

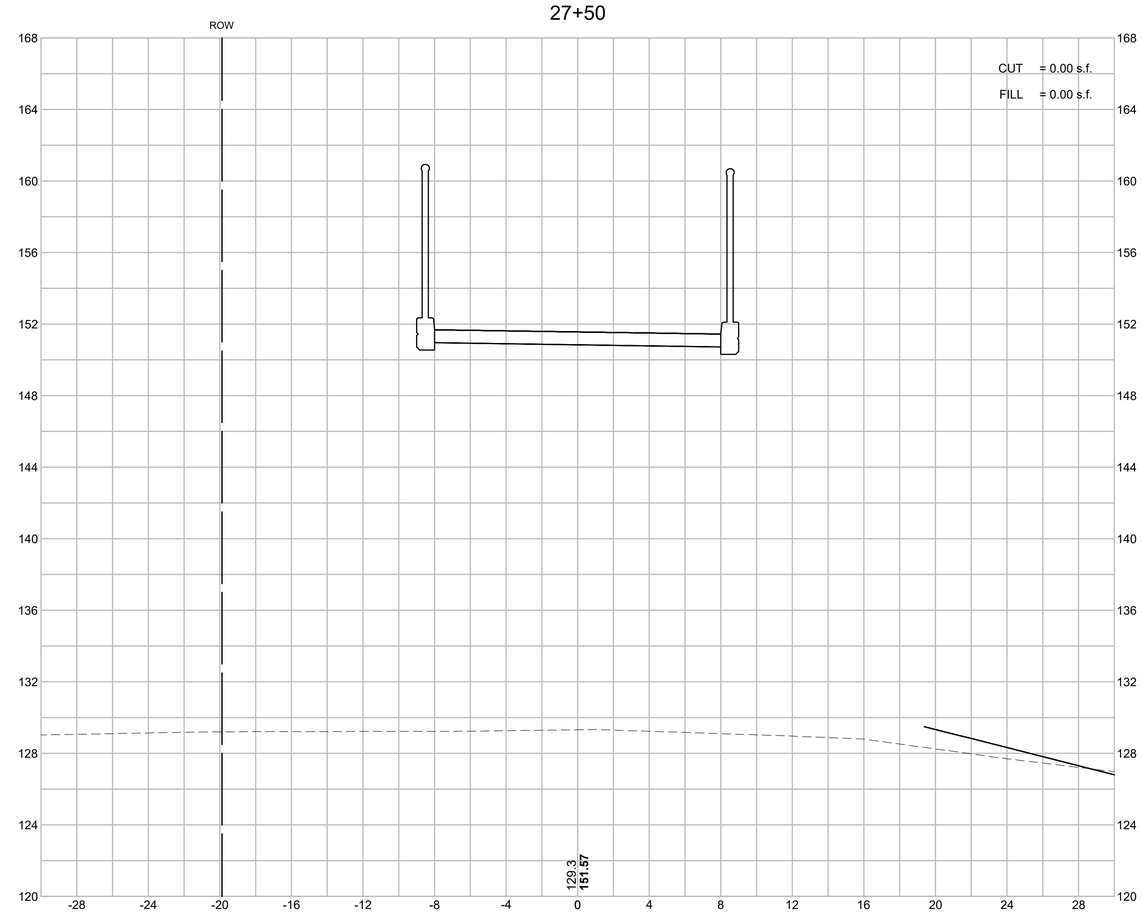

HOR. SCALE IN FEET
4 0 4 8
4 0 4 8
VER. SCALE IN FEET

ACTON & CONCORD
BRUCE FREEMAN RAIL TRAIL PHASE 2B

STATE	FED. AID PROJ. NO.	SHEET NO.	TOTAL SHEETS
MA	-	125	146
PROJECT FILE NO.	606223		

CROSS SECTIONS

606223_HD_(XS).DWG Plotted on 22-Jun-2018 5:53 PM

28+00

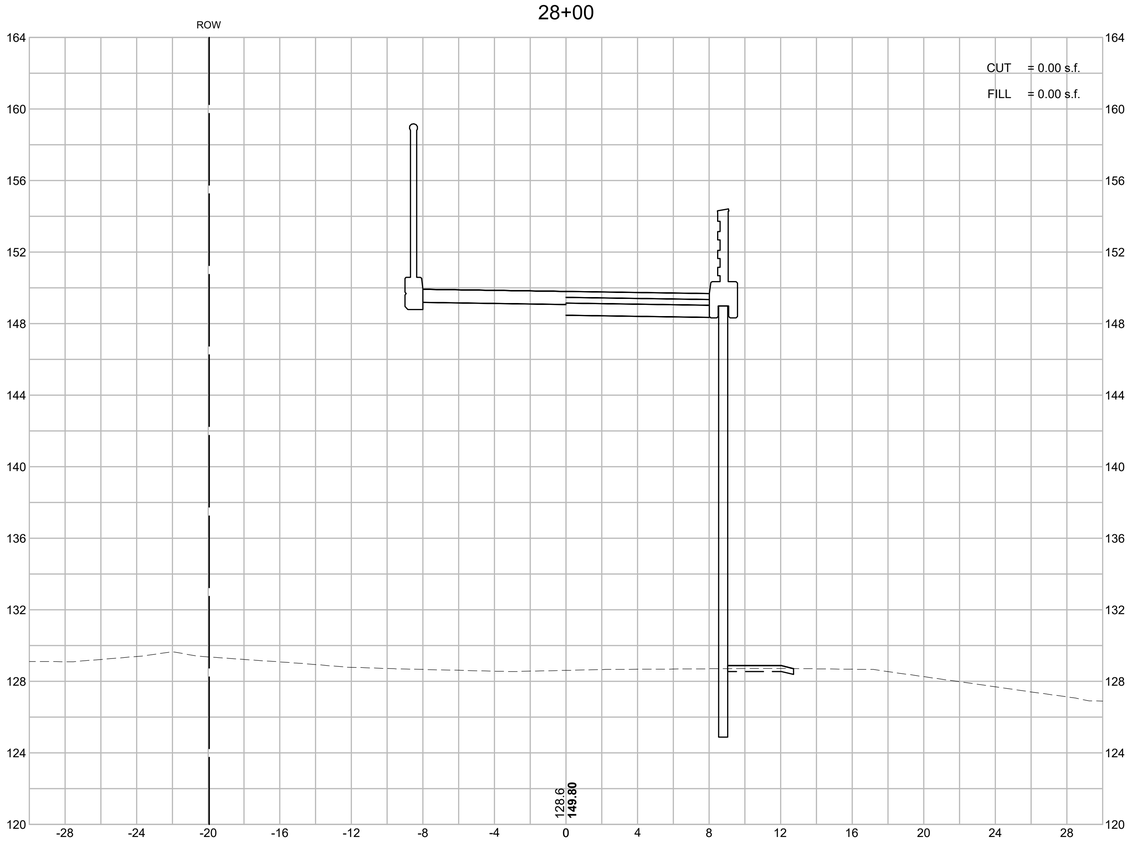

28+50

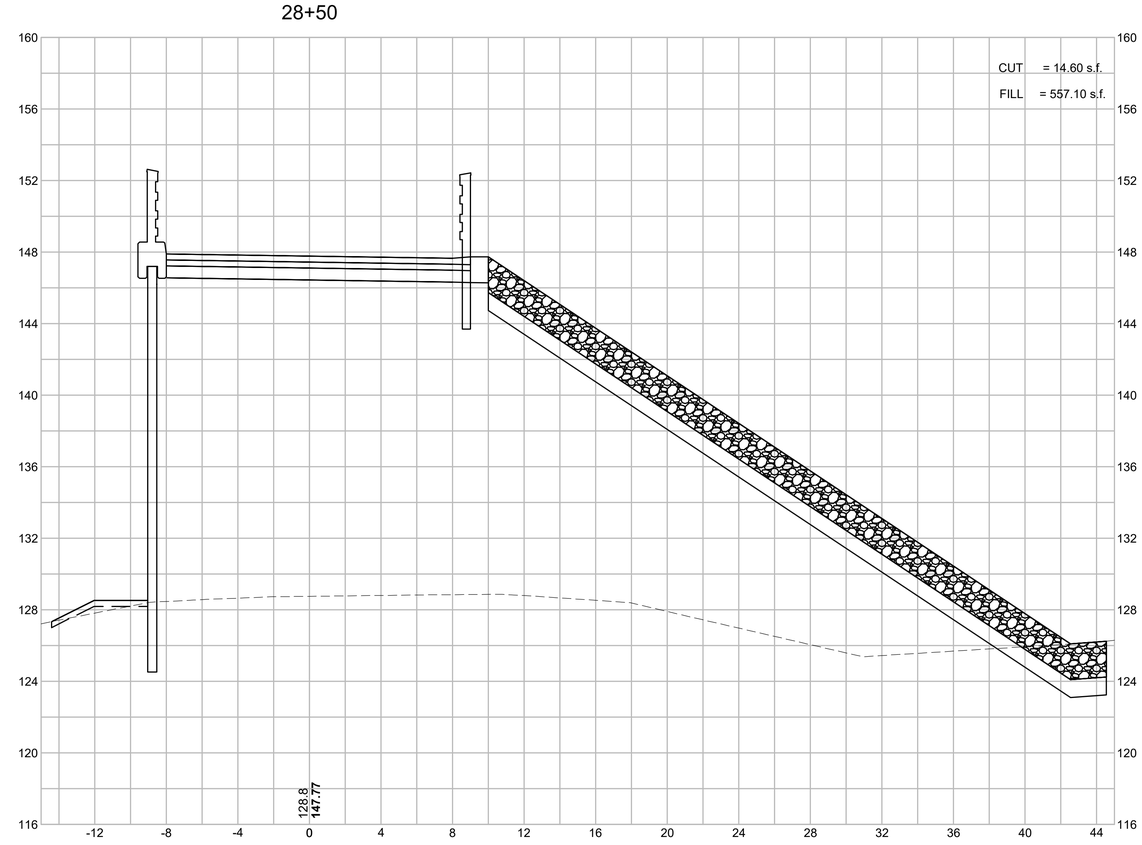

HOR. SCALE IN FEET

4 0 4 8

4 0 4 8

VER. SCALE IN FEET

ACTON & CONCORD
BRUCE FREEMAN RAIL TRAIL PHASE 2B

STATE	FED. AID PROJ. NO.	SHEET NO.	TOTAL SHEETS
MA	-	126	146
PROJECT FILE NO.	606223		

CROSS SECTIONS

606223_HD_(XS).DWG Plotted on 22-Jun-2018 5:54 PM

29+00

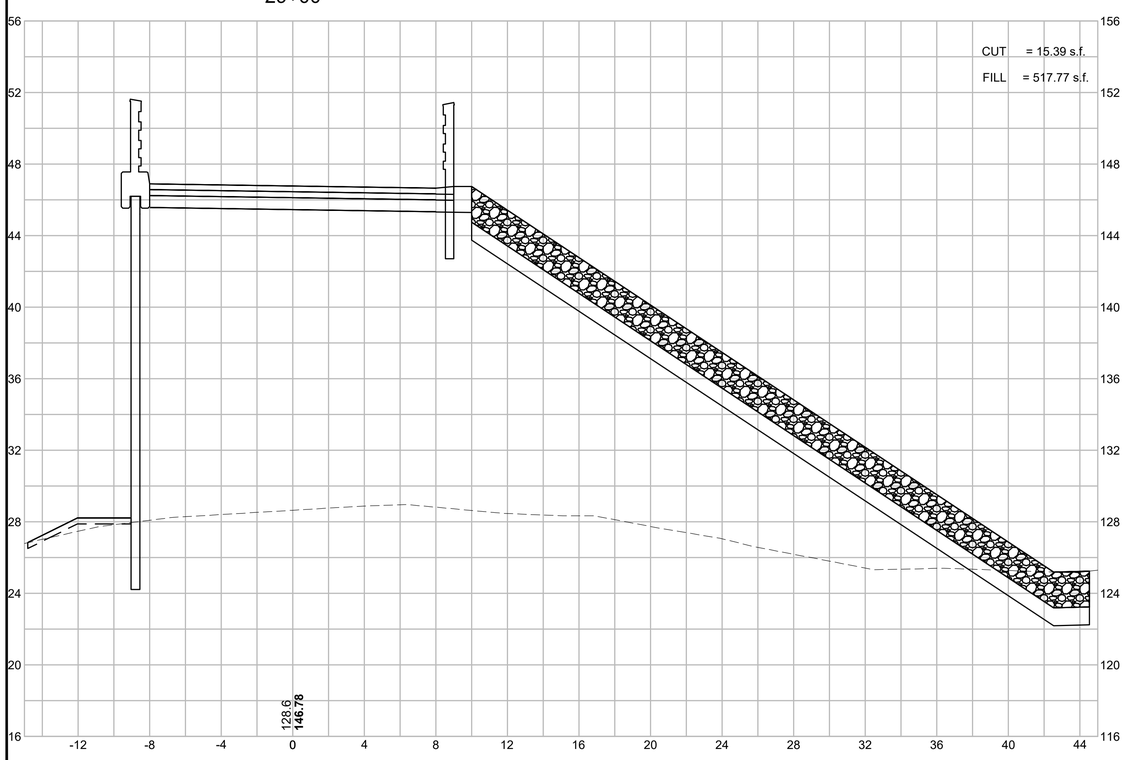

29+50

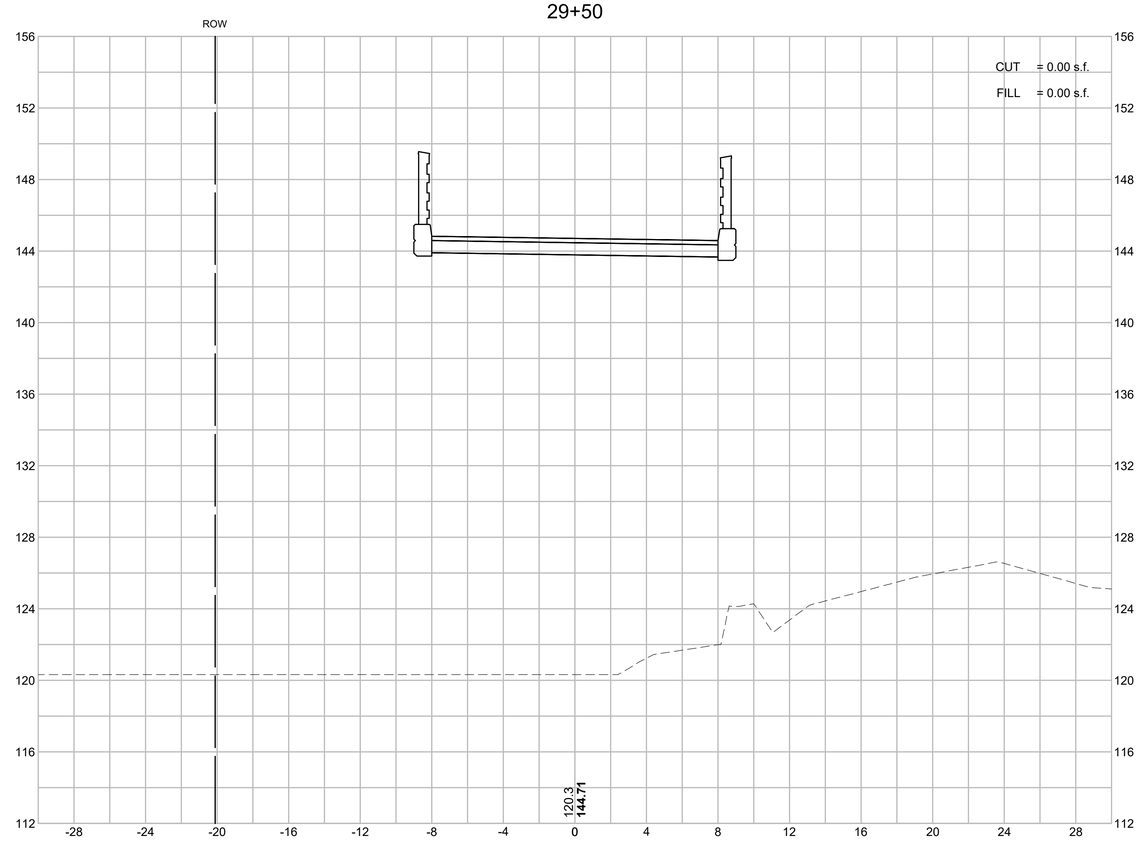

ACTON & CONCORD
BRUCE FREEMAN RAIL TRAIL PHASE 2B

STATE	FED. AID PROJ. NO.	SHEET NO.	TOTAL SHEETS
MA	-	127	146
PROJECT FILE NO.	606223		

CROSS SECTIONS

HOR. SCALE IN FEET
4 0 4 8
VER. SCALE IN FEET
4 0 4 8

30+50

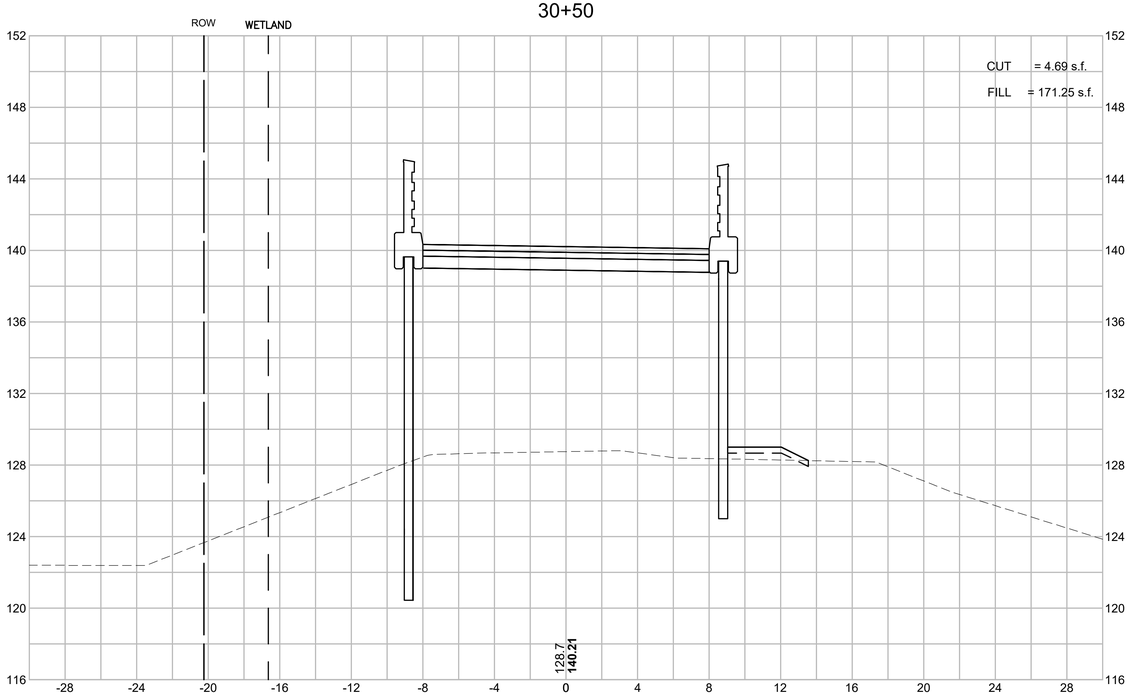

30+00

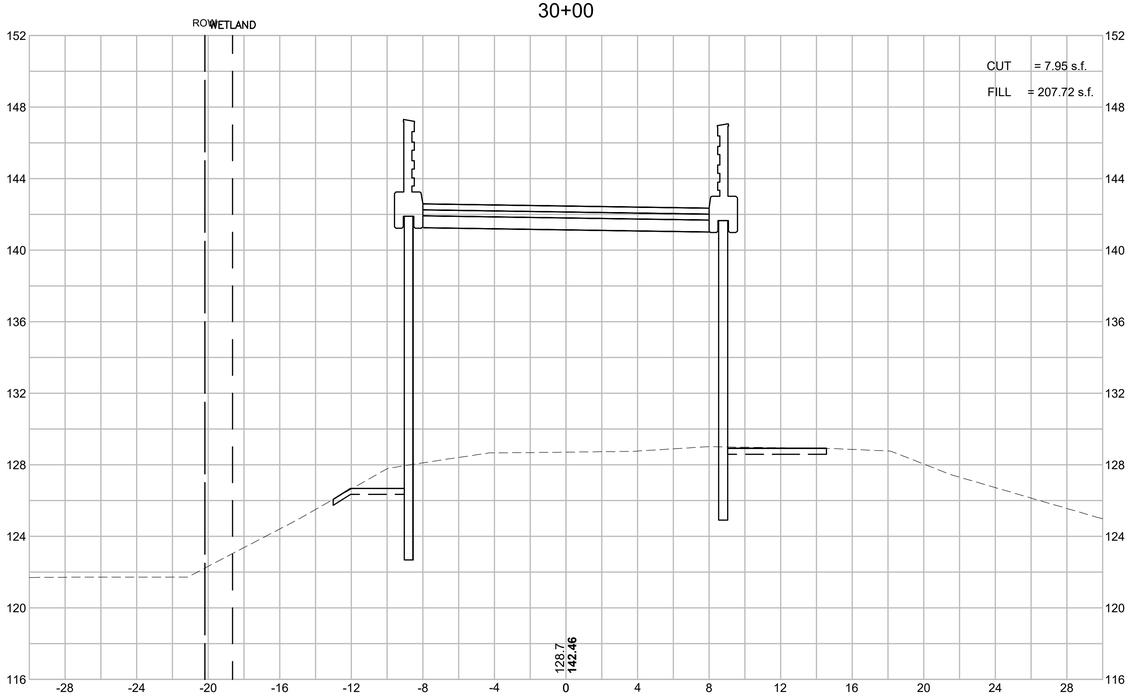

31+00

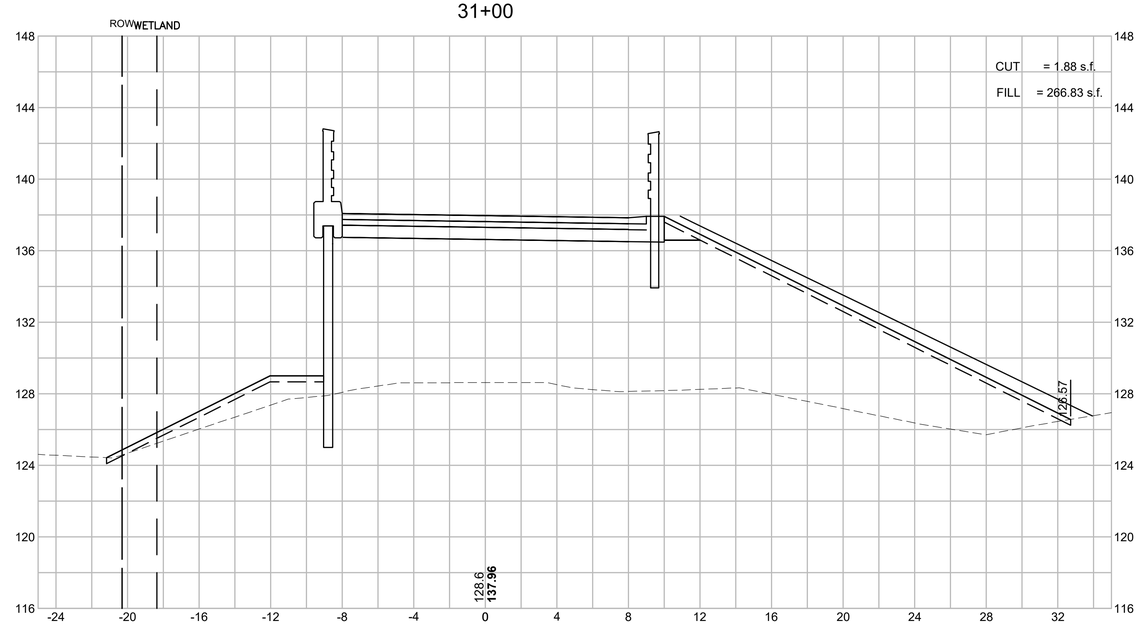

606223_HD_(XS).DWG Plotted on 22-Jun-2018 5:54 PM

HOR. SCALE IN FEET
4 0 4 8
4 0 4 8
VER. SCALE IN FEET

ACTON & CONCORD
BRUCE FREEMAN RAIL TRAIL PHASE 2B

STATE	FED. AID PROJ. NO.	SHEET NO.	TOTAL SHEETS
MA	-	128	146
PROJECT FILE NO.	606223		

CROSS SECTIONS

32+50

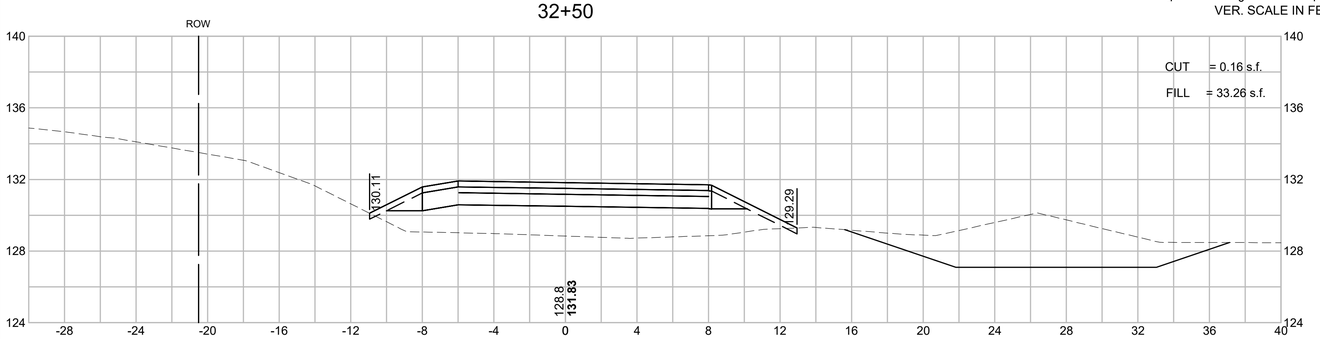

32+00

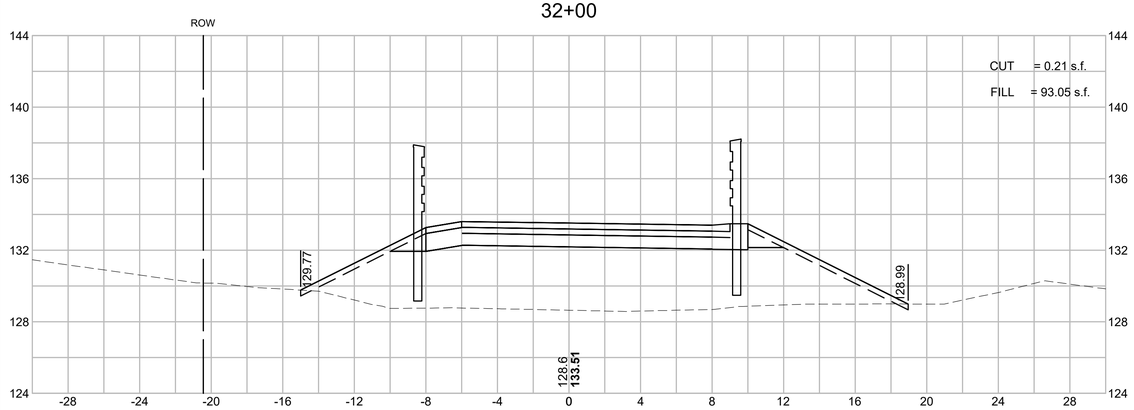

31+50

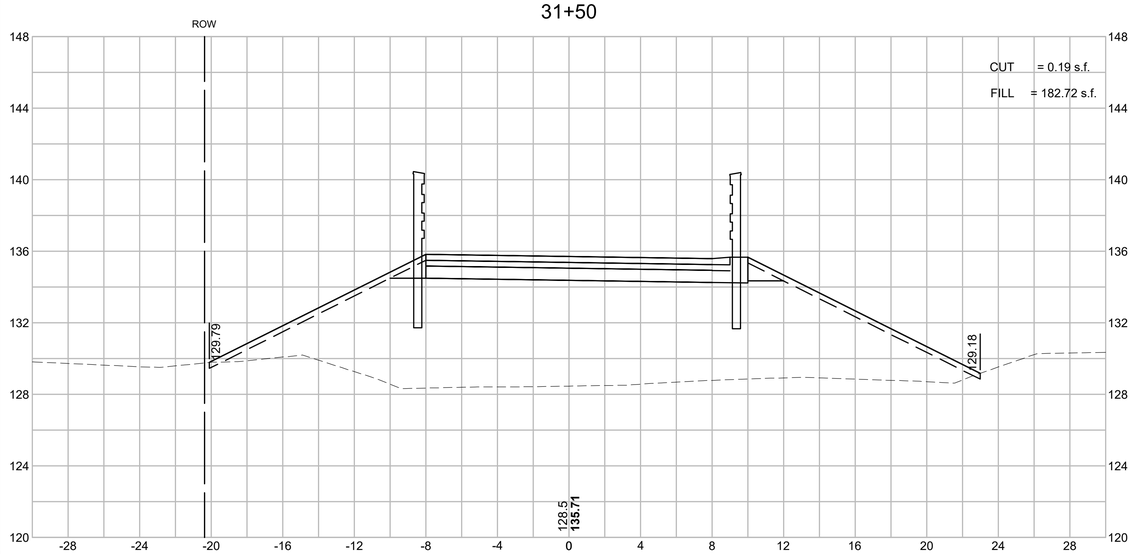

34+00

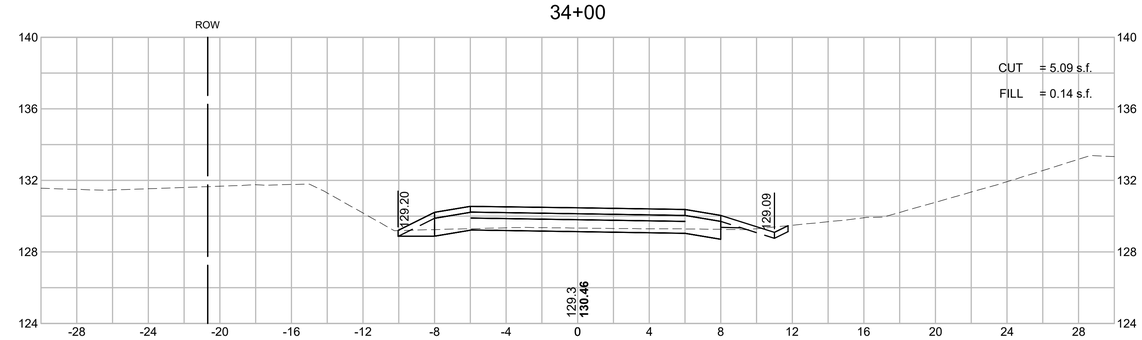

33+50

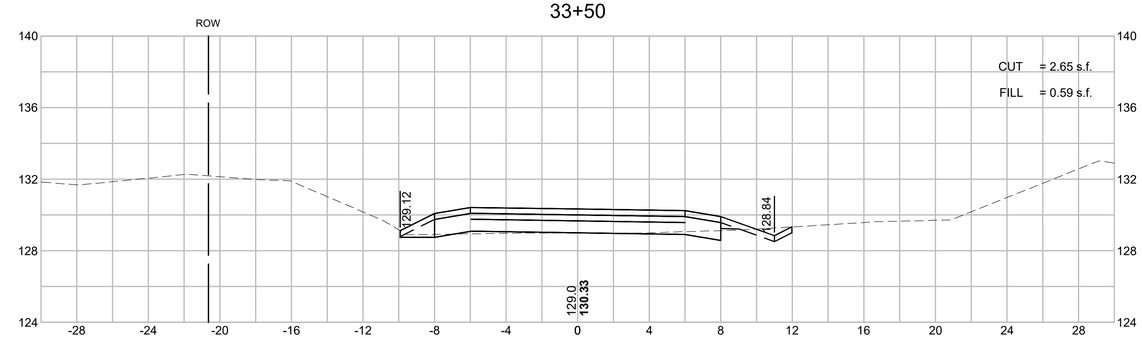

33+00

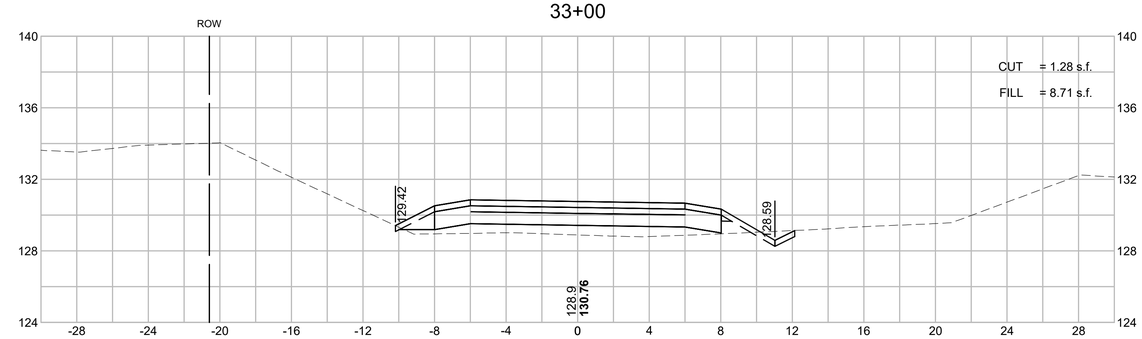

606223_HD_(XS).DWG Plotted on 22-Jun-2018 5:55 PM

ACTON & CONCORD
BRUCE FREEMAN RAIL TRAIL PHASE 2B

STATE	FED. AID PROJ. NO.	SHEET NO.	TOTAL SHEETS
MA	-	129	146
PROJECT FILE NO.	606223		

CROSS SECTIONS

HOR. SCALE IN FEET
4 0 4 8
4 0 4 8
VER. SCALE IN FEET

35+50

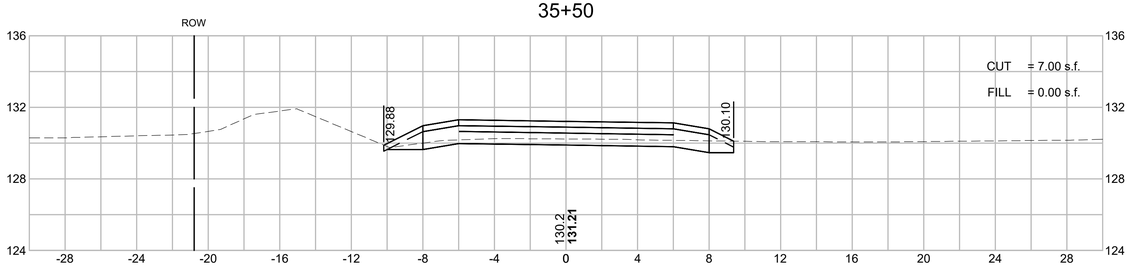

35+00

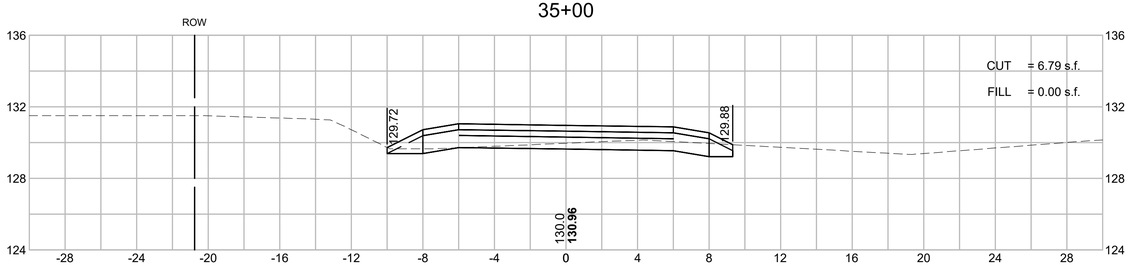

34+70

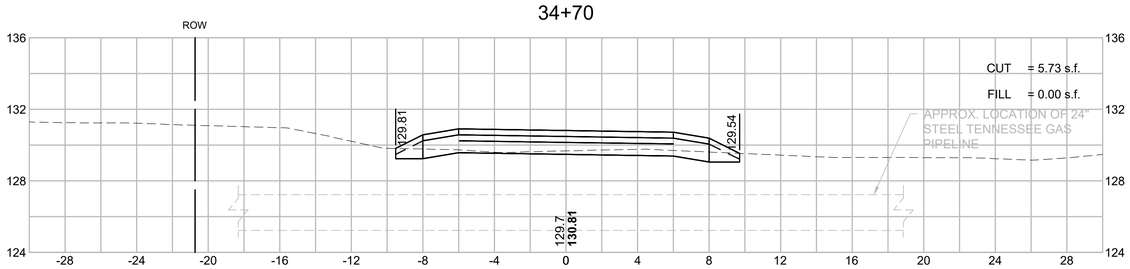

36+50

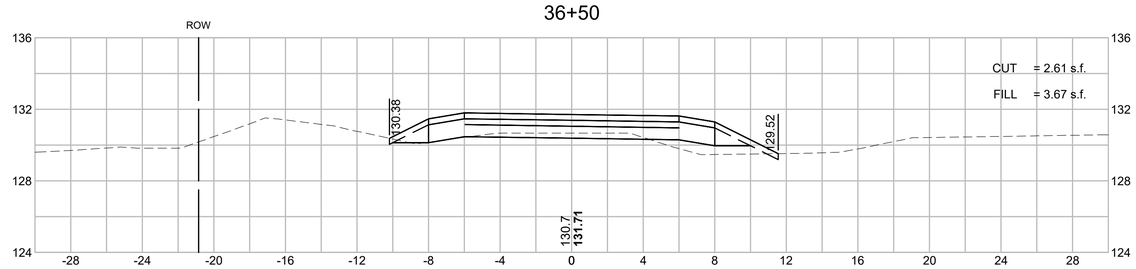

34+50

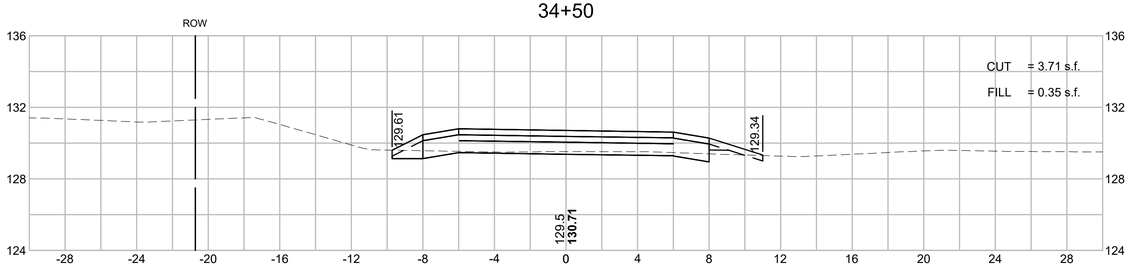

36+00

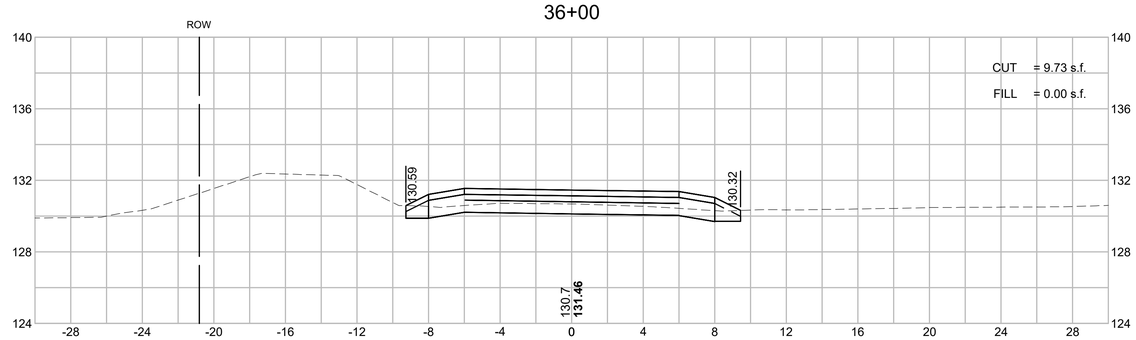

606223_HD_(XS).DWG Plotted on 22-Jun-2018 5:55 PM

HOR. SCALE IN FEET
4 0 4 8
4 0 4 8
VER. SCALE IN FEET

ACTON & CONCORD
BRUCE FREEMAN RAIL TRAIL PHASE 2B

STATE	FED. AID PROJ. NO.	SHEET NO.	TOTAL SHEETS
MA	-	130	146
PROJECT FILE NO.	606223		

CROSS SECTIONS

606223_HD_(XS).DWG Plotted on 22-Jun-2018 5:56 PM

38+00

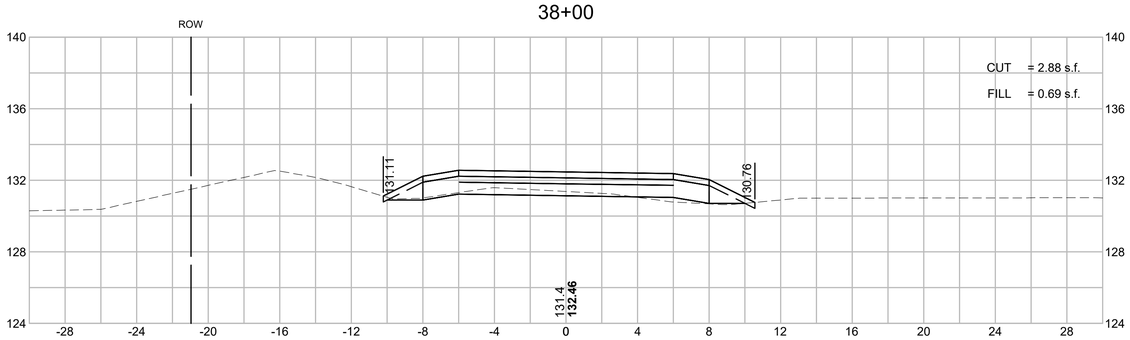

39+50

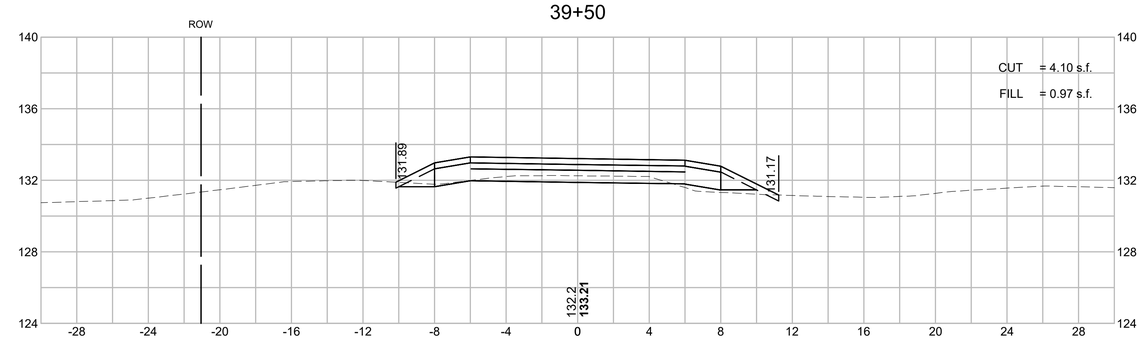

37+50

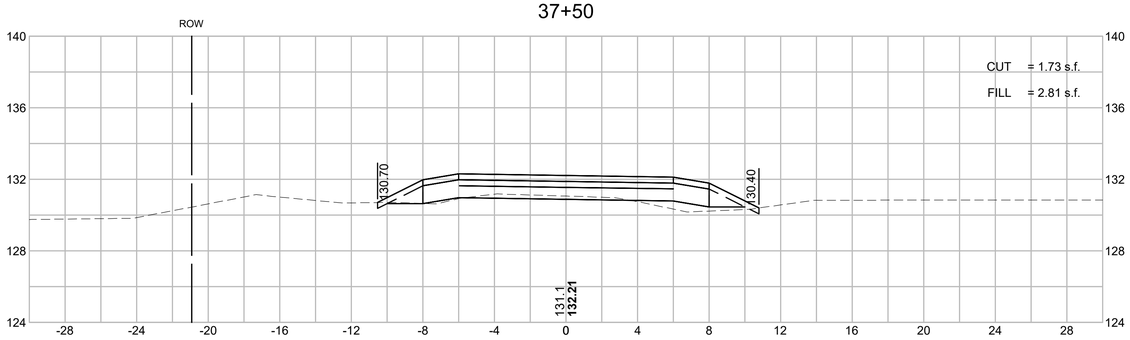

39+00

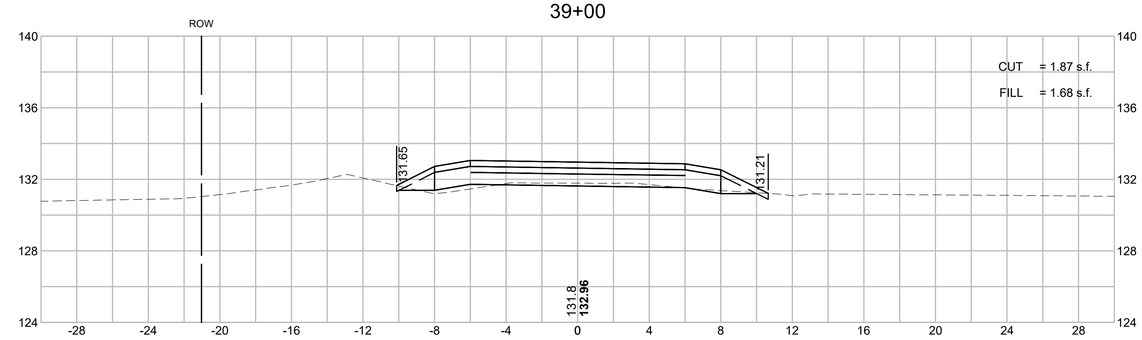

37+00

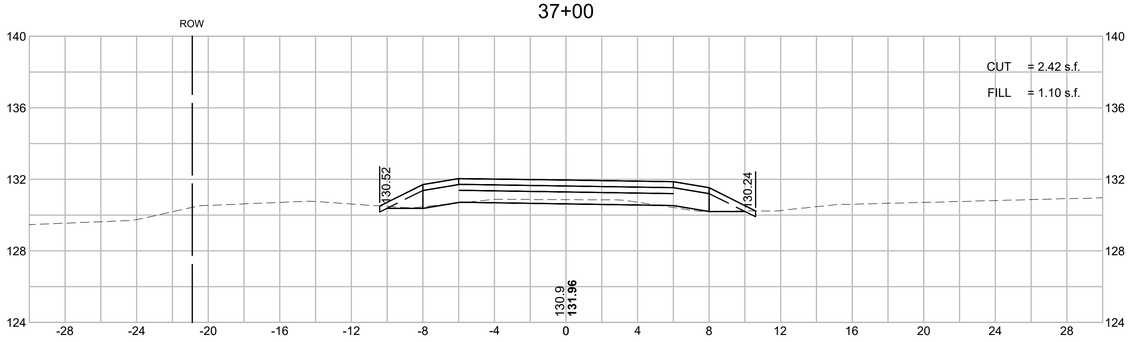

38+50

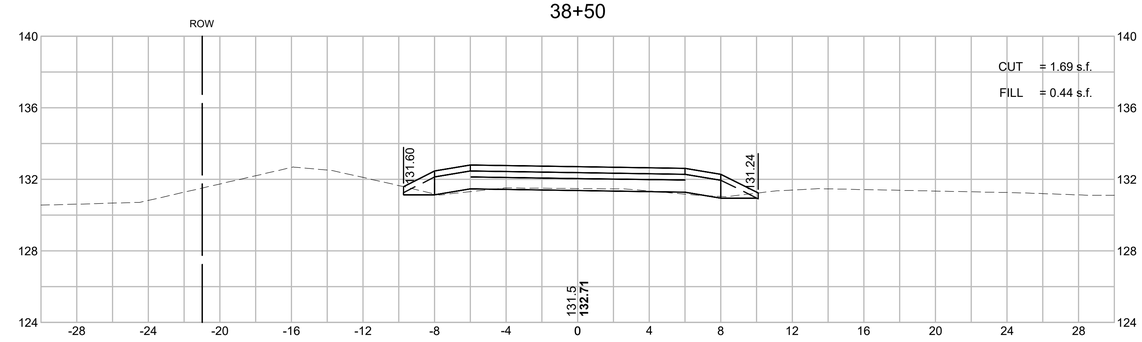

HOR. SCALE IN FEET
4 0 4 8
4 0 4 8
VER. SCALE IN FEET

ACTON & CONCORD
BRUCE FREEMAN RAIL TRAIL PHASE 2B

STATE	FED. AID PROJ. NO.	SHEET NO.	TOTAL SHEETS
MA	-	131	146
PROJECT FILE NO.	606223		

CROSS SECTIONS

41+00

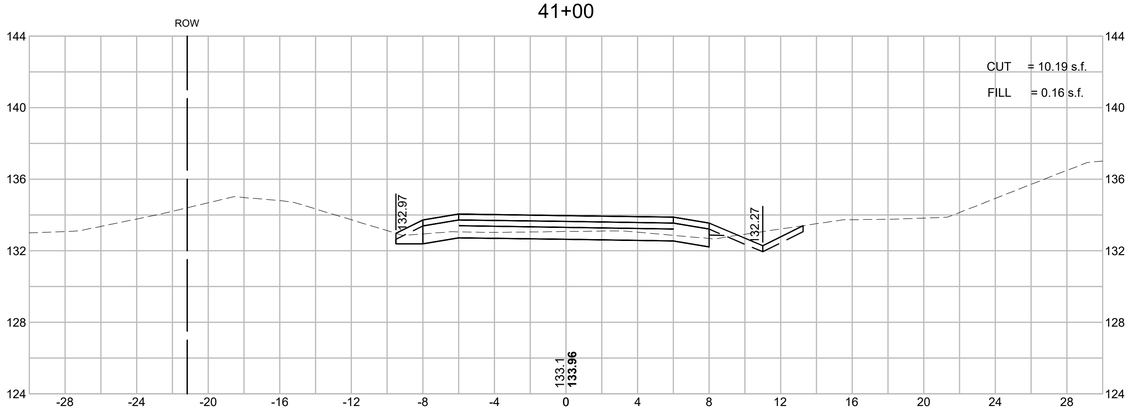

42+50

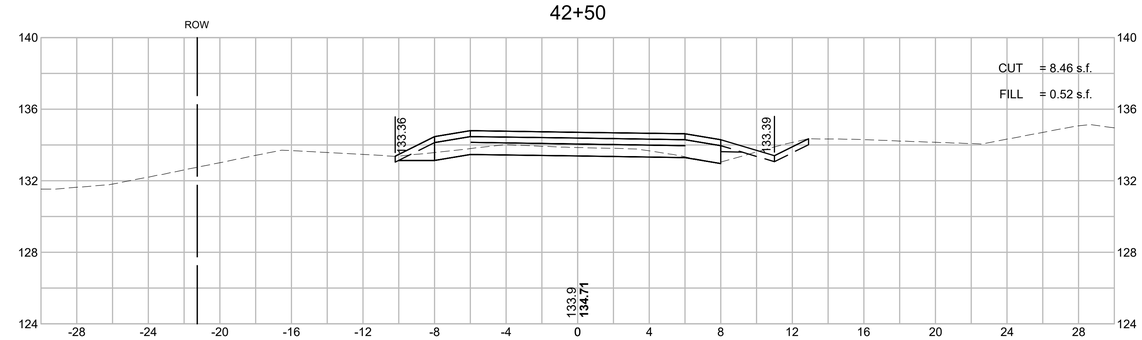

40+50

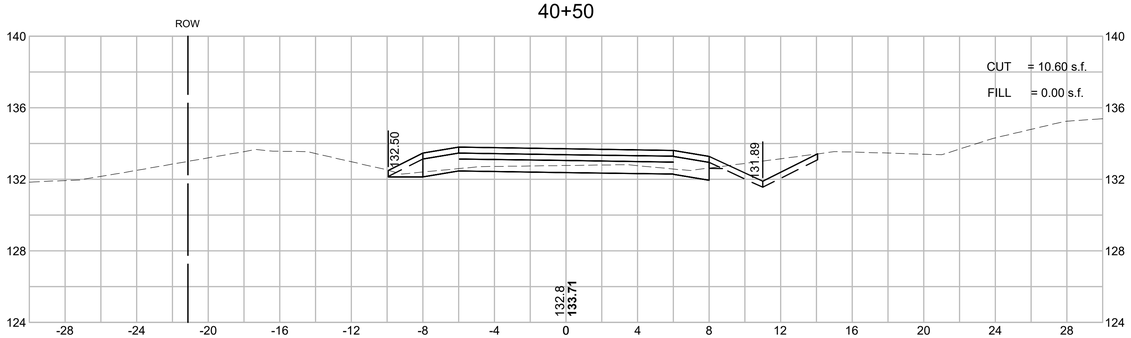

42+00

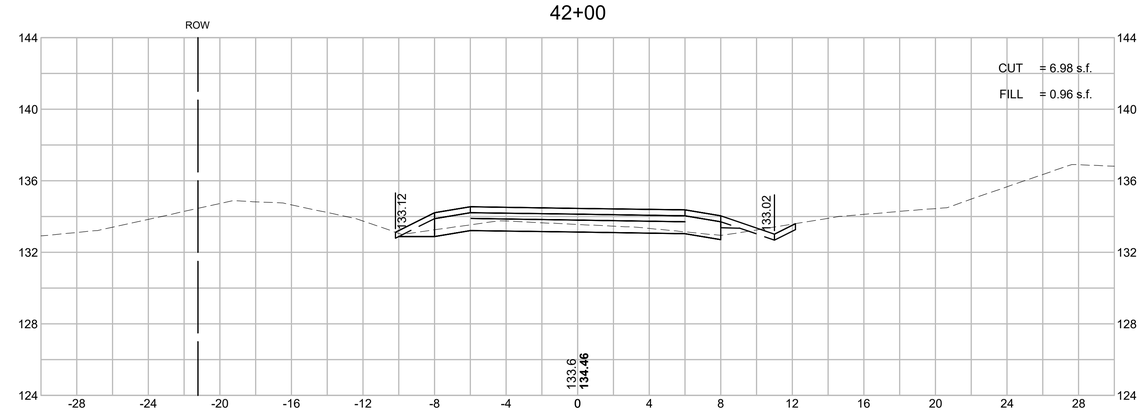

40+00

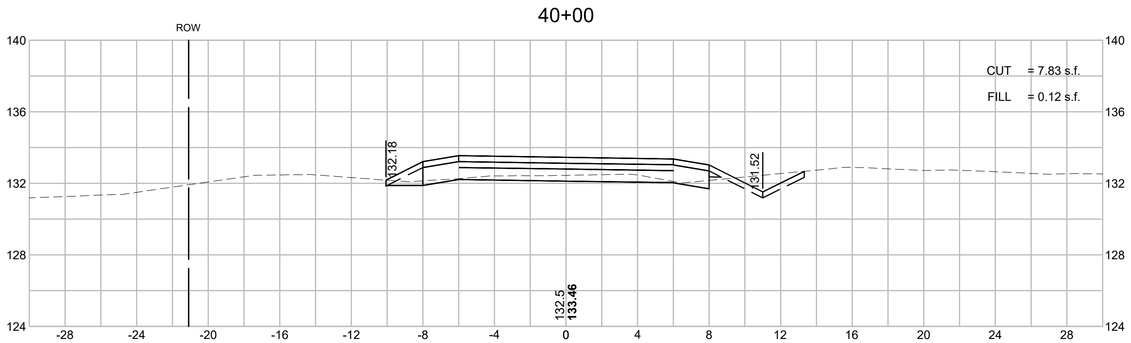

41+50

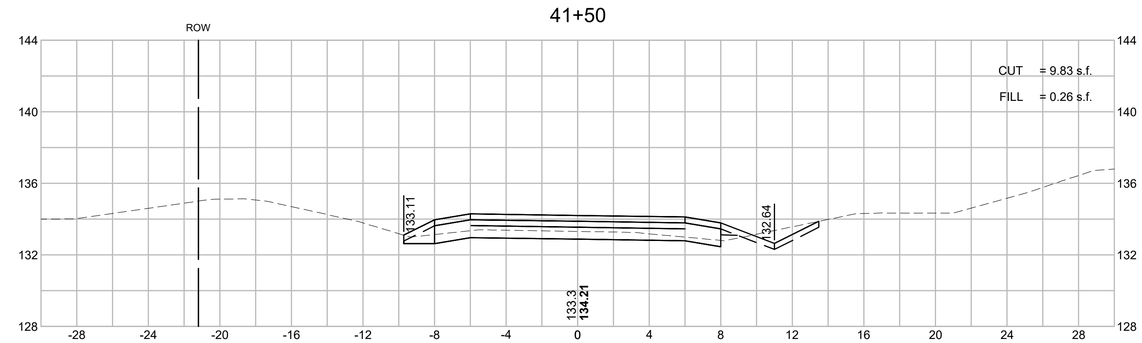

606223_HD_(XS).DWG Plotted on 22-Jun-2018 5:56 PM

ACTON & CONCORD
BRUCE FREEMAN RAIL TRAIL PHASE 2B

STATE	FED. AID PROJ. NO.	SHEET NO.	TOTAL SHEETS
MA	-	132	146
PROJECT FILE NO.	606223		

CROSS SECTIONS

HOR. SCALE IN FEET 4 0 4 8
VER. SCALE IN FEET 4 0 4 8

44+00

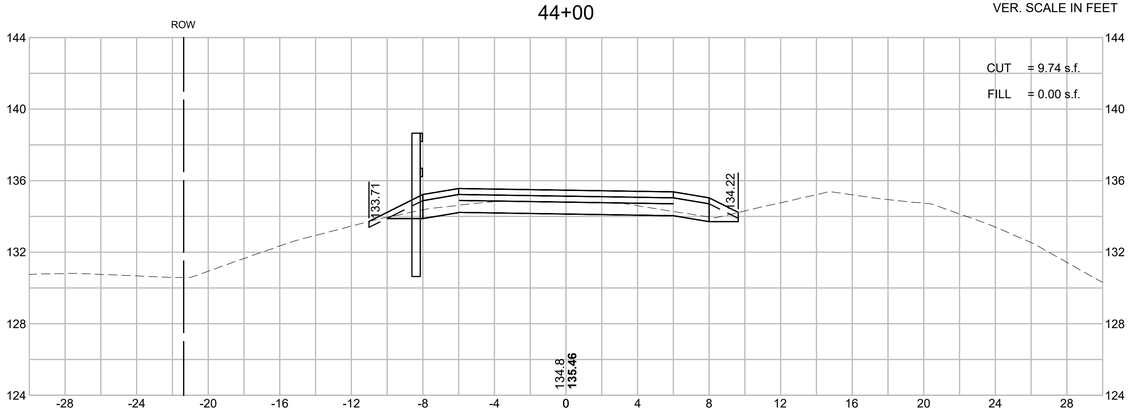

45+50

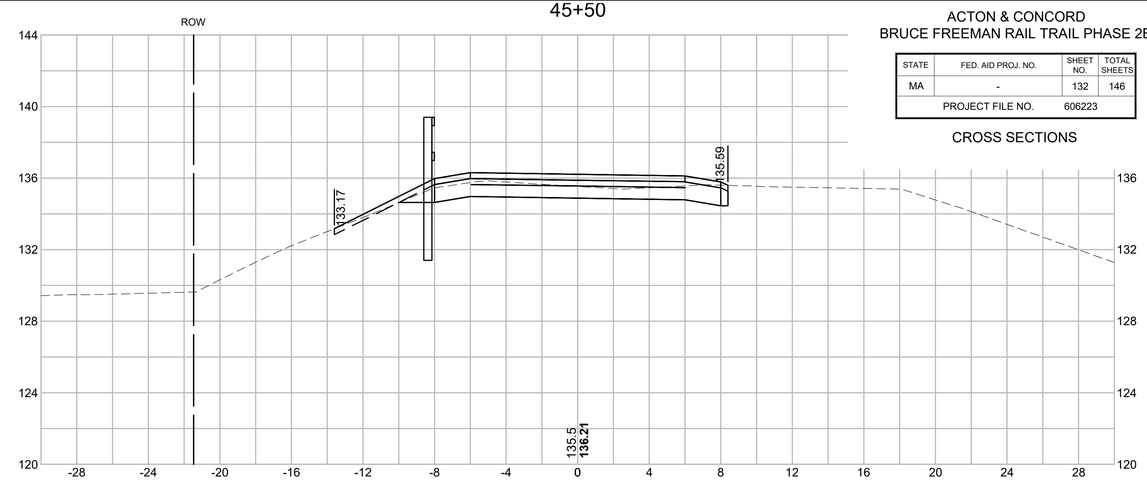

43+50

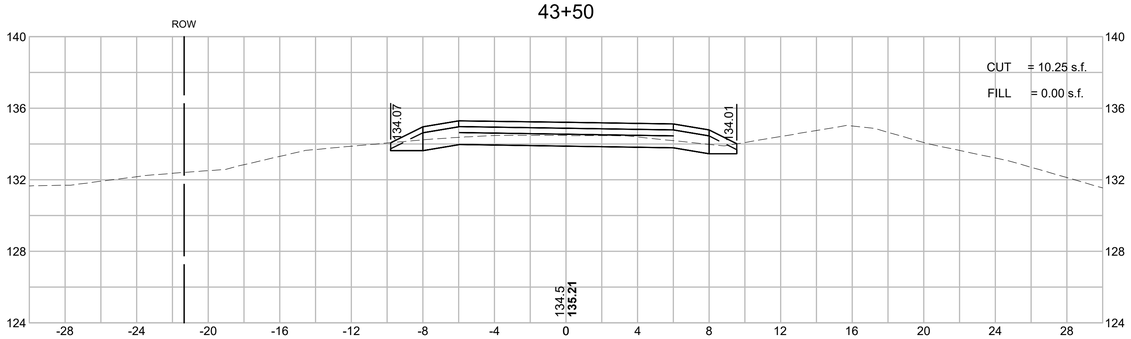

45+00

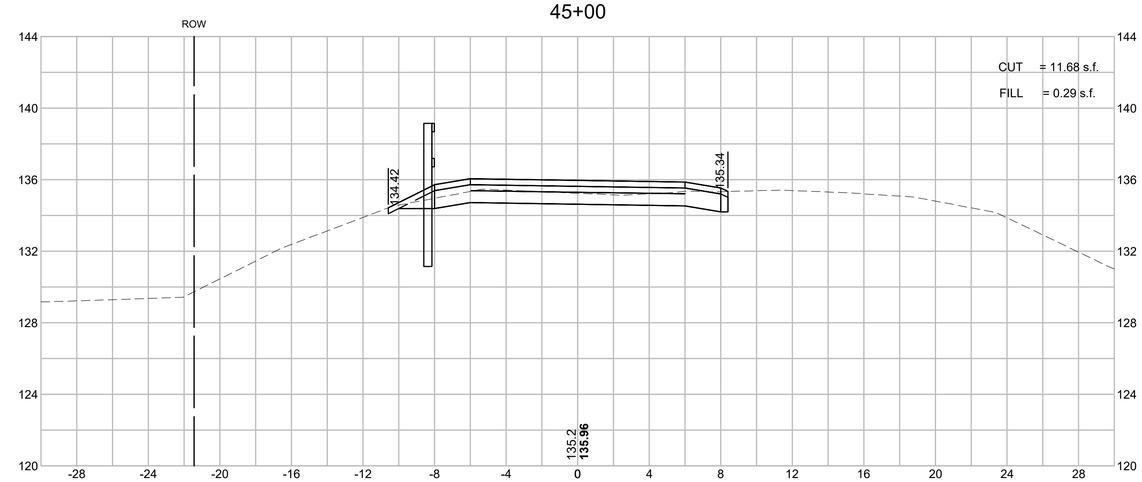

43+00

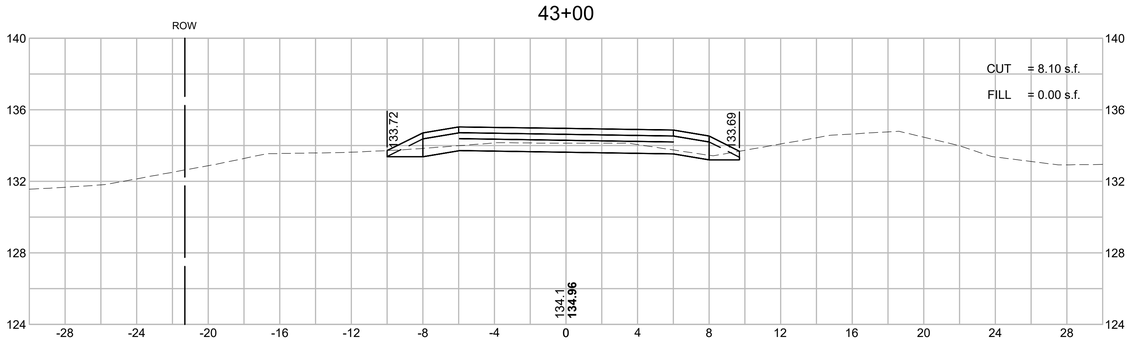

44+50

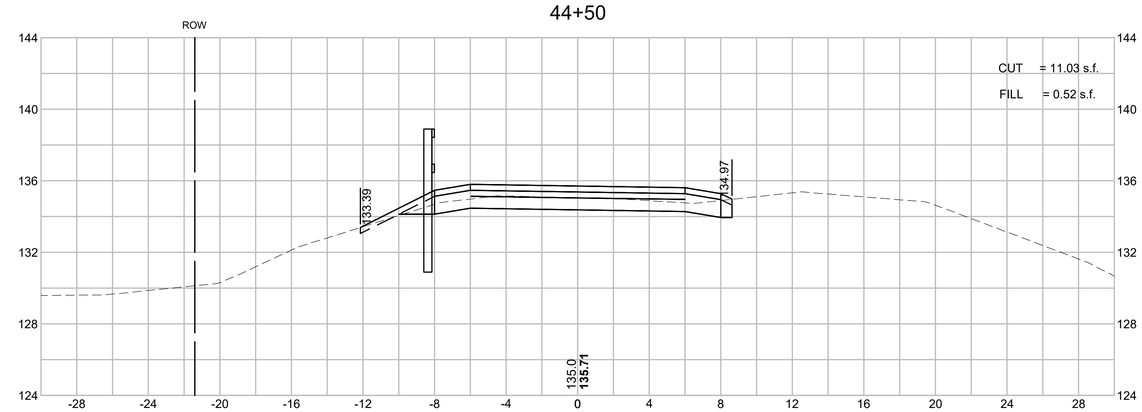

606223_HD_(XS).DWG Plotted on 22-Jun-2018 5:57 PM

HOR. SCALE IN FEET
4 0 4 8
4 0 4 8
VER. SCALE IN FEET

ACTON & CONCORD
BRUCE FREEMAN RAIL TRAIL PHASE 2B

STATE	FED. AID PROJ. NO.	SHEET NO.	TOTAL SHEETS
MA	-	133	146
PROJECT FILE NO.	606223		

CROSS SECTIONS

606223_HD_(XS).DWG Plotted on 22-Jun-2018 5:57 PM

46+50

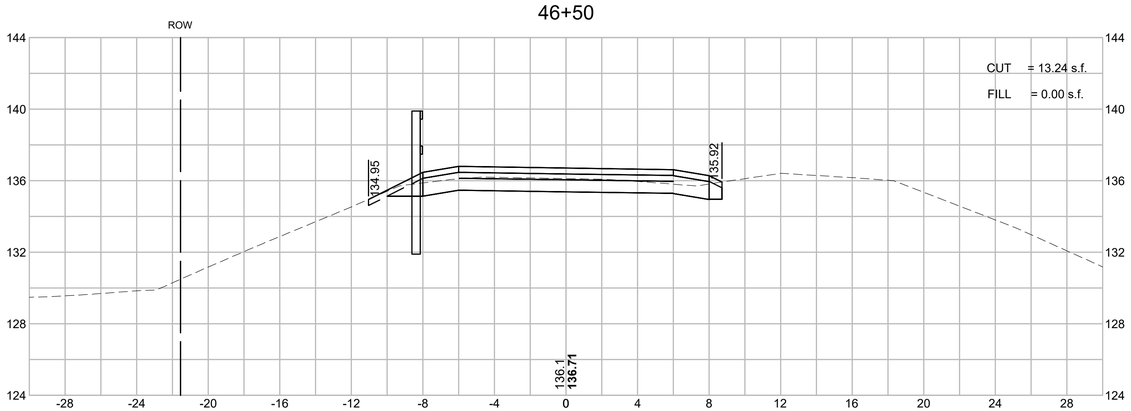

47+50

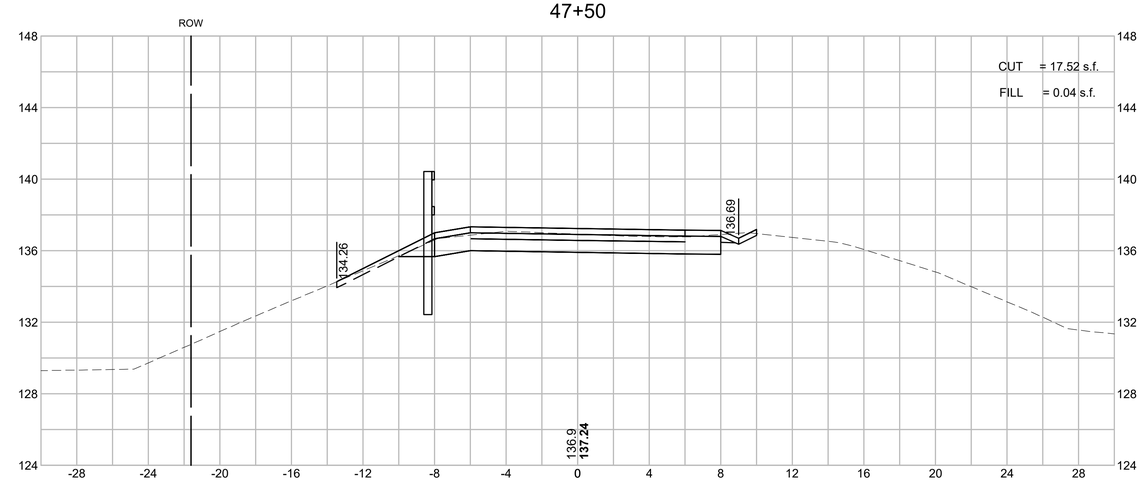

46+00

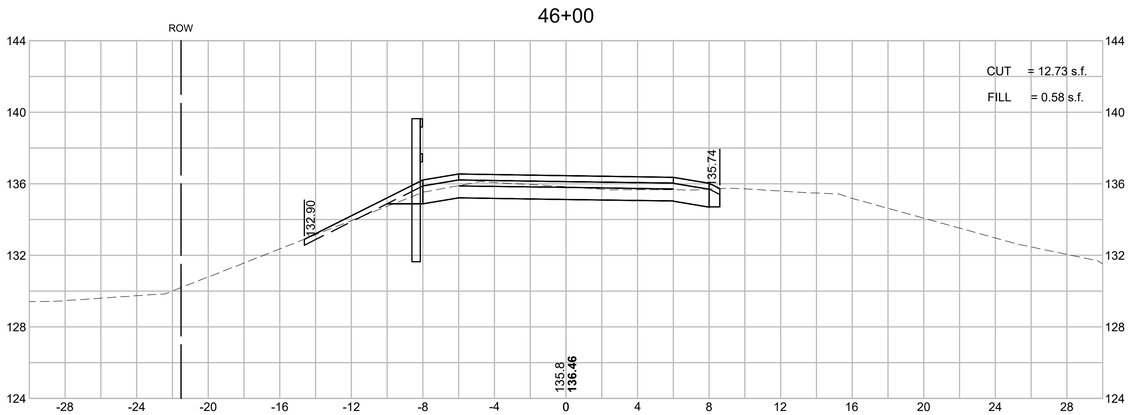

47+00

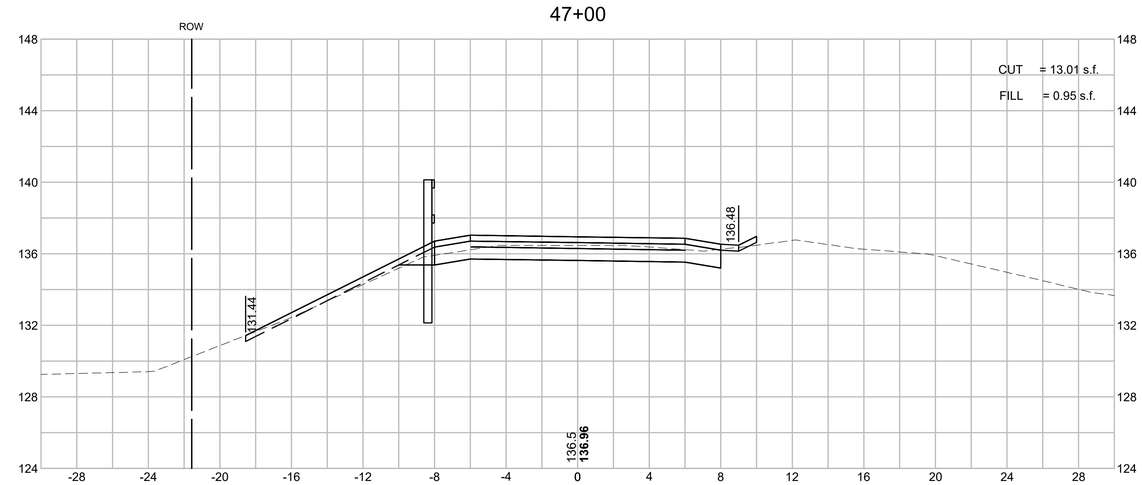

HOR. SCALE IN FEET
4 0 4 8
4 0 4 8
VER. SCALE IN FEET

ACTON & CONCORD
BRUCE FREEMAN RAIL TRAIL PHASE 2B

STATE	FED. AID PROJ. NO.	SHEET NO.	TOTAL SHEETS
MA	-	134	146
PROJECT FILE NO.	606223		

CROSS SECTIONS

606223_HD_(XS).DWG Plotted on 22-Jun-2018 5:58 PM

48+50

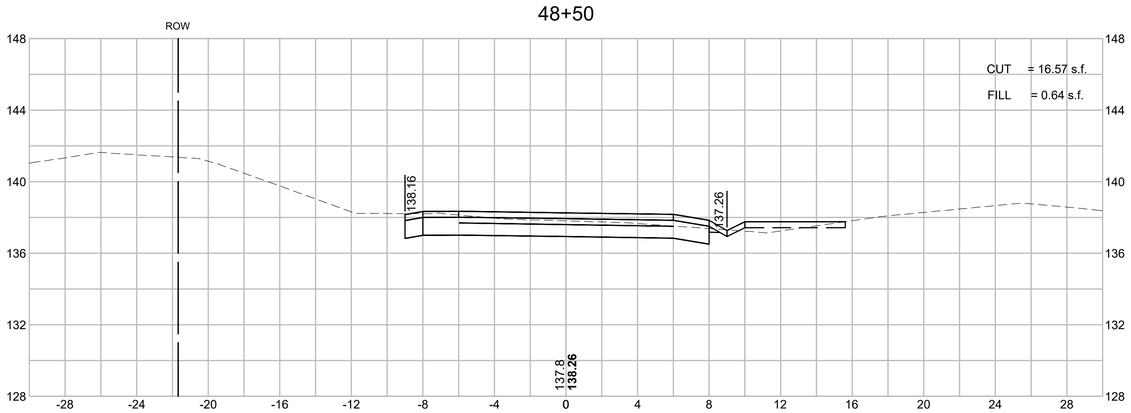

49+50

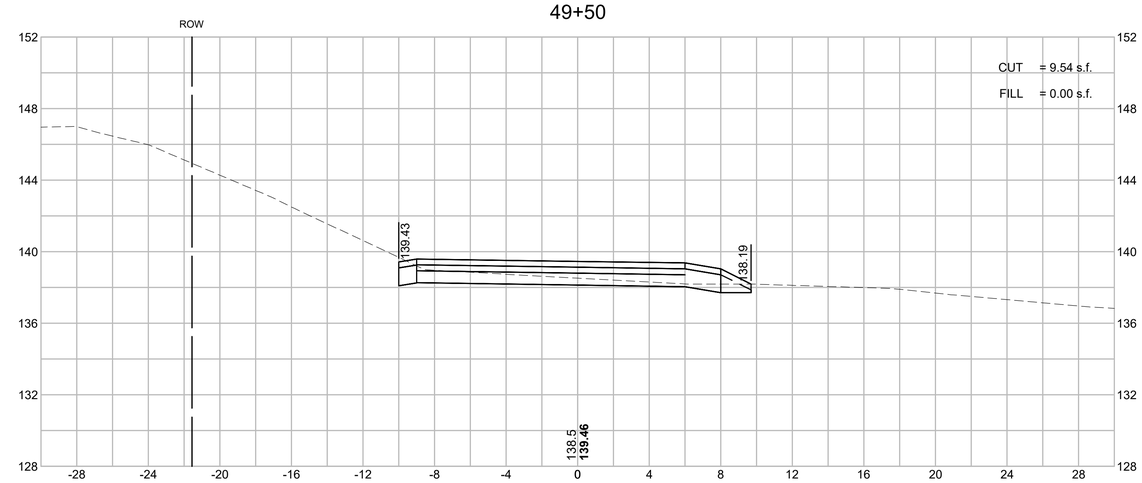

48+00

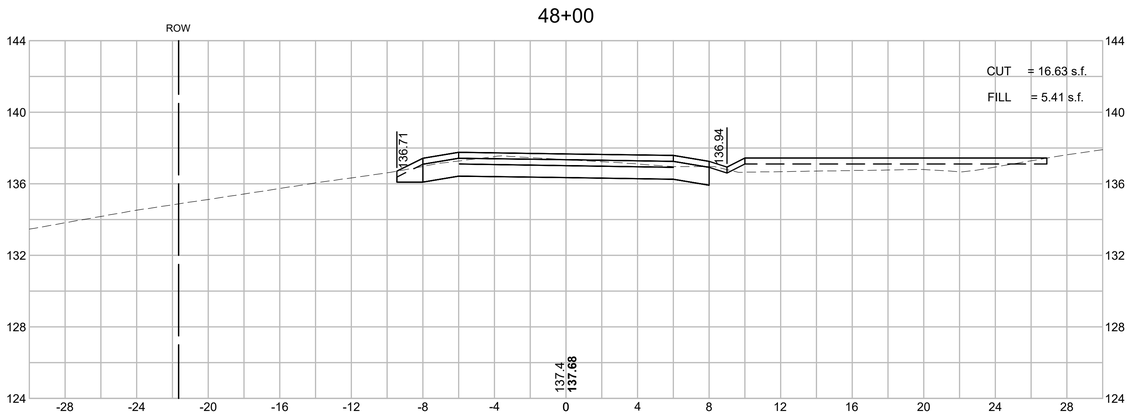

49+00

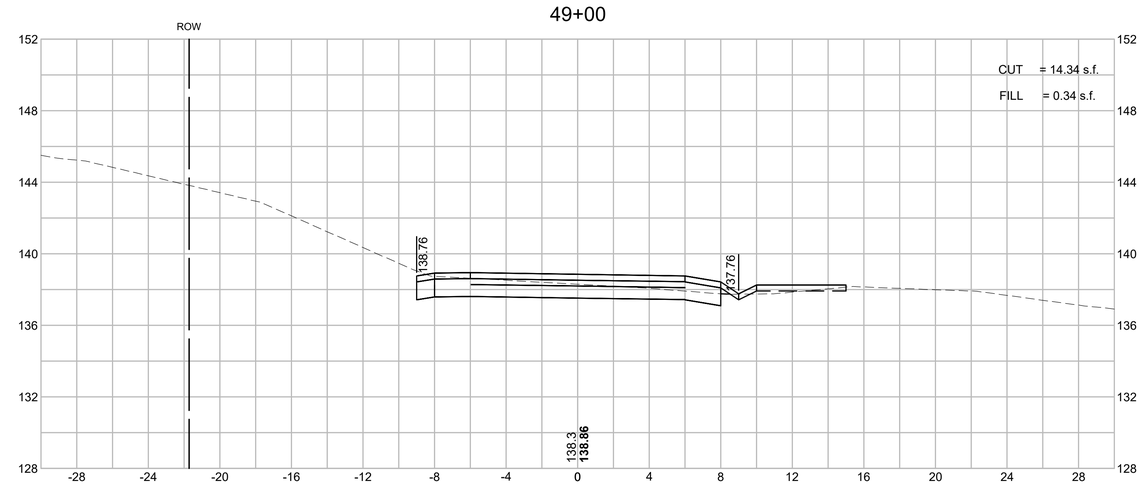

HOR. SCALE IN FEET
4 0 4 8
4 0 4 8
VER. SCALE IN FEET

ACTON & CONCORD
BRUCE FREEMAN RAIL TRAIL PHASE 2B

STATE	FED. AID PROJ. NO.	SHEET NO.	TOTAL SHEETS
MA	-	135	146
PROJECT FILE NO.	606223		

CROSS SECTIONS

606223_HD_(XS).DWG Plotted on 22-Jun-2018 5:58 PM

50+50

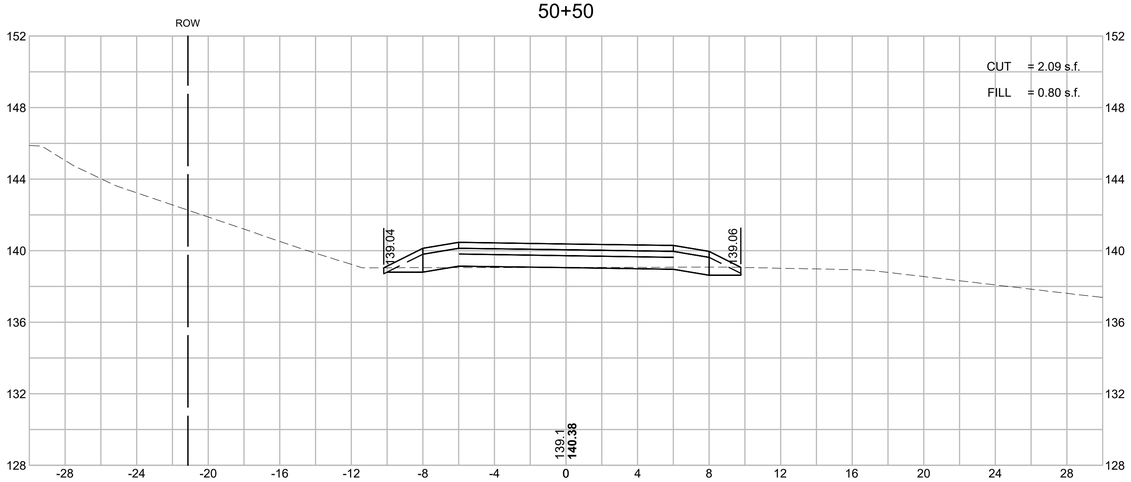

51+50

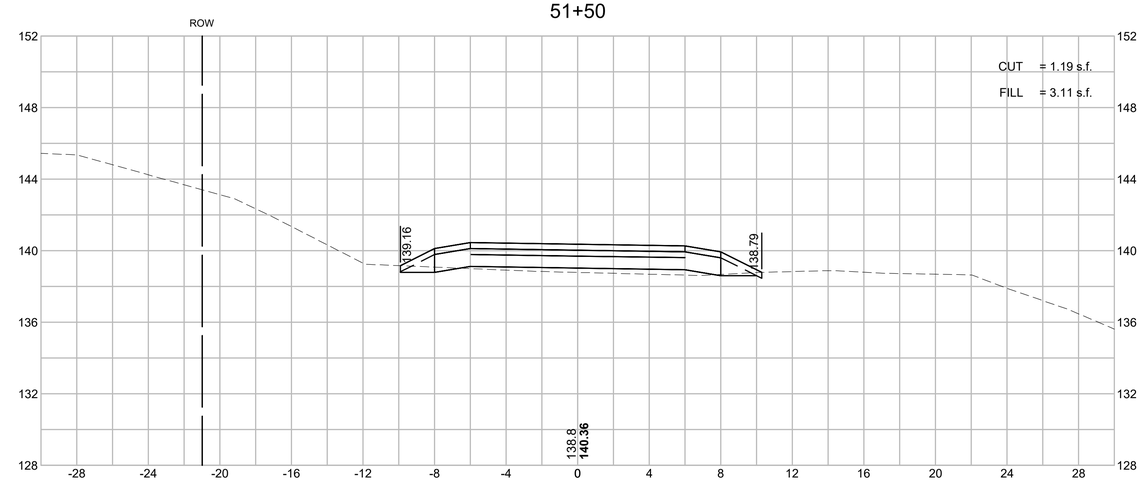

50+00

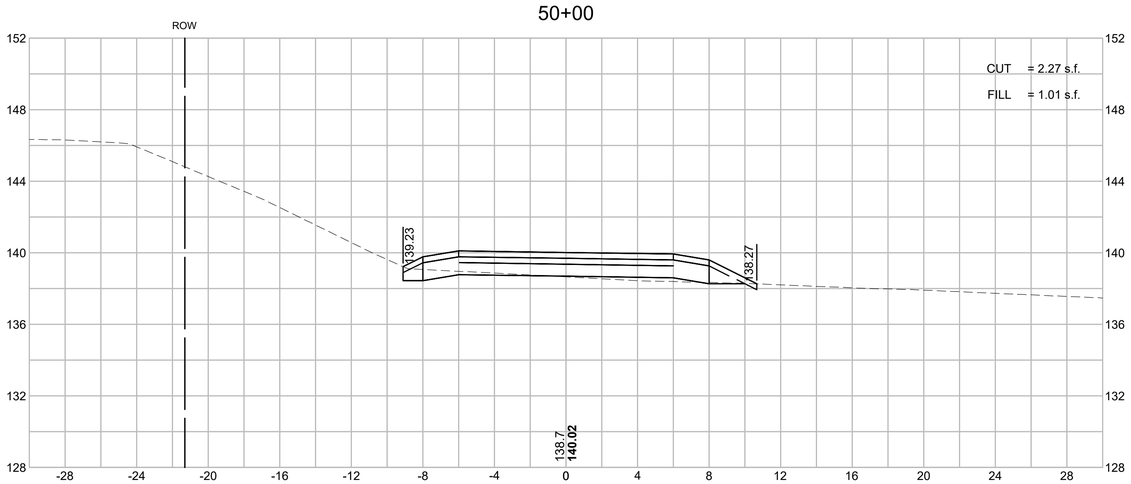

51+00

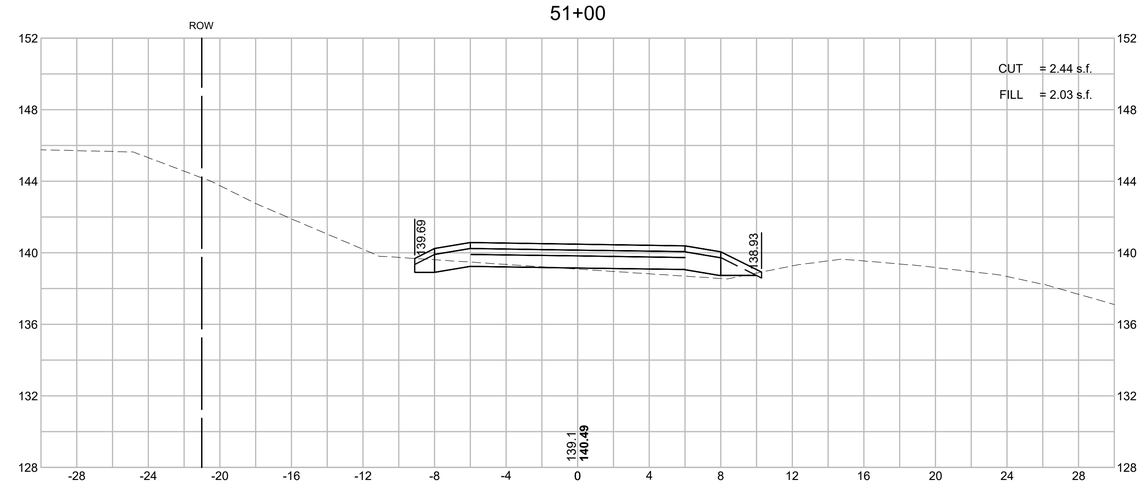

HOR. SCALE IN FEET
4 0 4 8
4 0 4 8
VER. SCALE IN FEET

ACTON & CONCORD
BRUCE FREEMAN RAIL TRAIL PHASE 2B

STATE	FED. AID PROJ. NO.	SHEET NO.	TOTAL SHEETS
MA	-	136	146
PROJECT FILE NO.	606223		

CROSS SECTIONS

606223_HD_(XS).DWG Plotted on 22-Jun-2018 5:59 PM

52+50

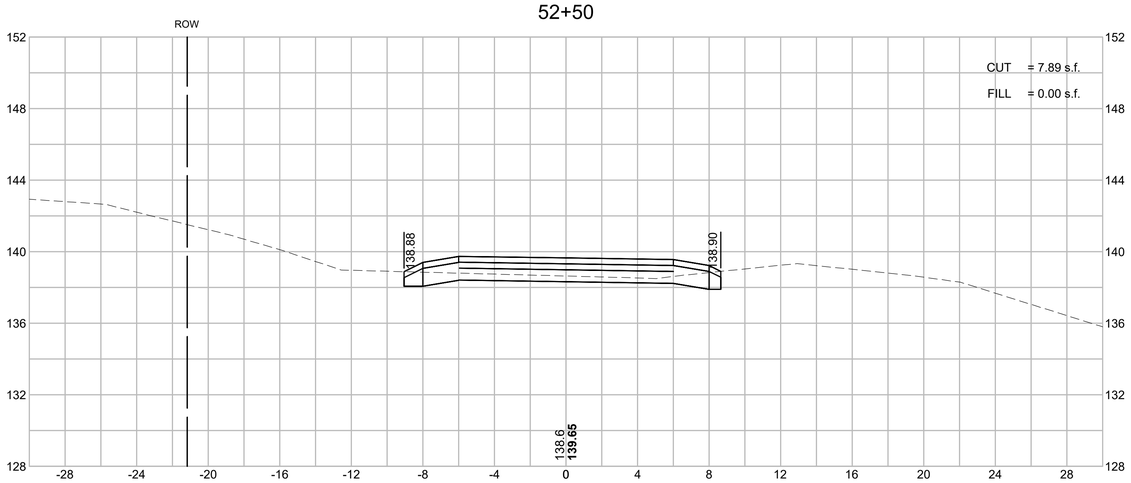

53+50

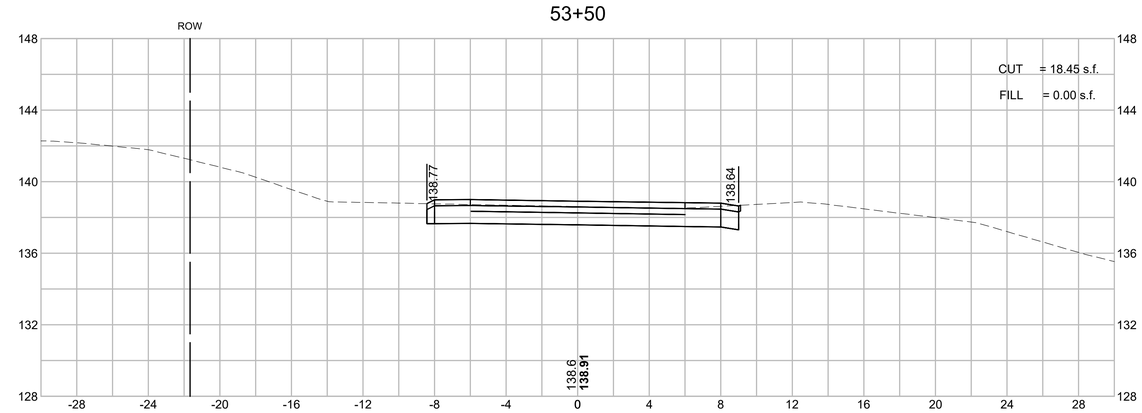

52+00

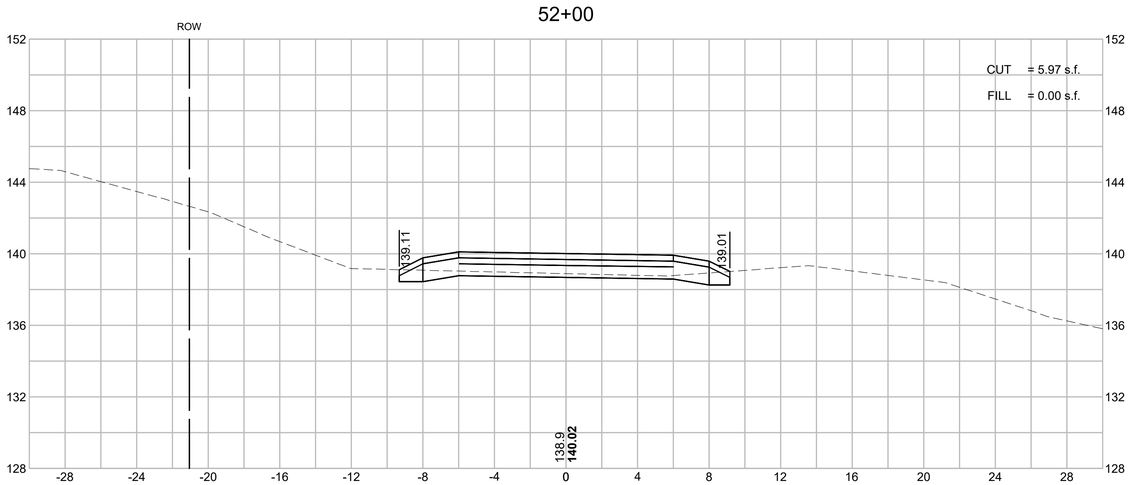

53+00

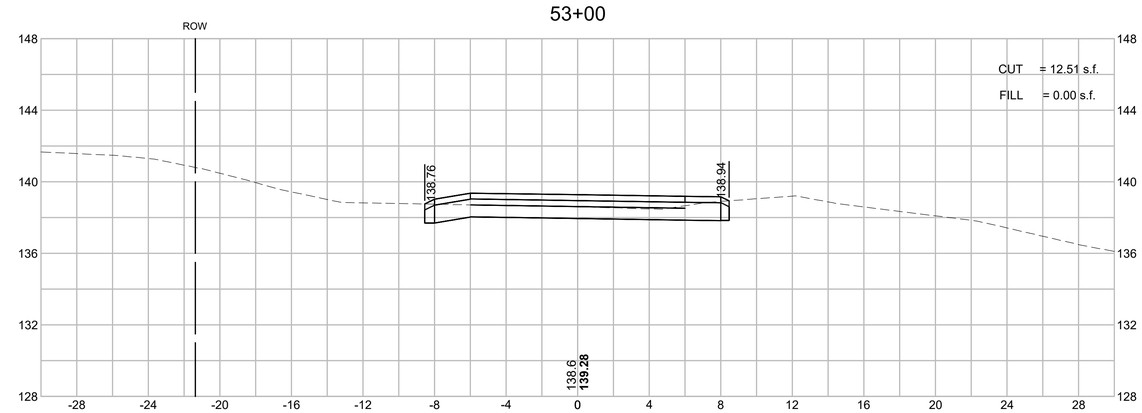

ACTON & CONCORD
BRUCE FREEMAN RAIL TRAIL PHASE 2B

STATE	FED. AID PROJ. NO.	SHEET NO.	TOTAL SHEETS
MA	-	137	146
PROJECT FILE NO.	606223		

CROSS SECTIONS

HOR. SCALE IN FEET
4 0 4 8
4 0 4 8
VER. SCALE IN FEET

55+00

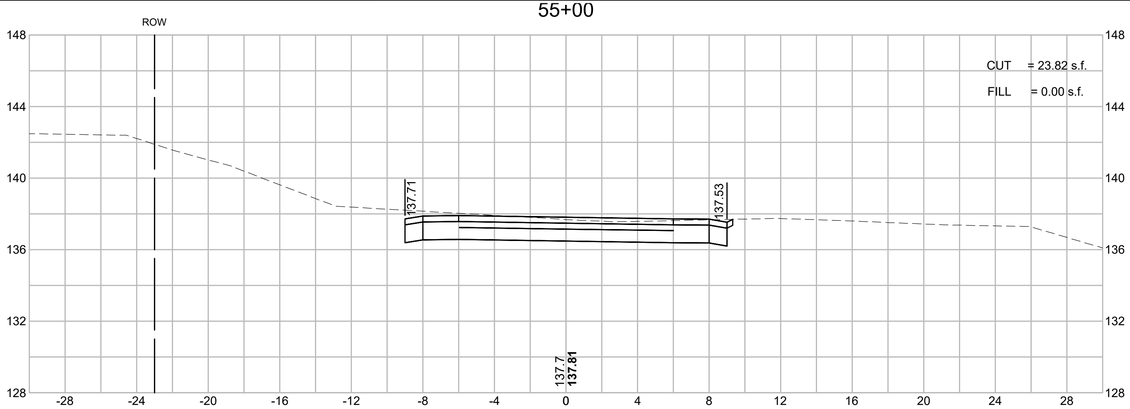

54+50

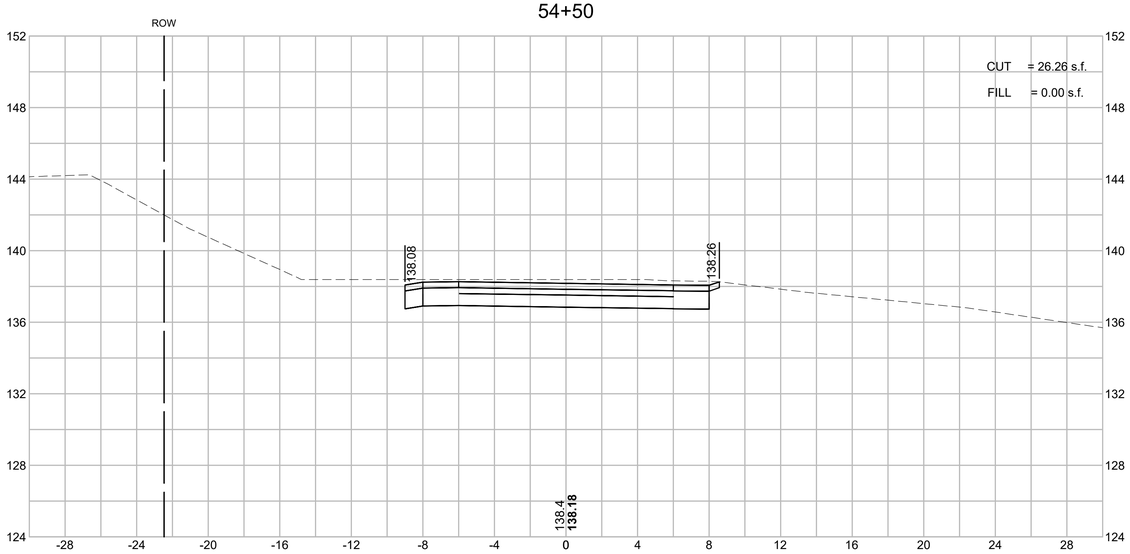

54+00

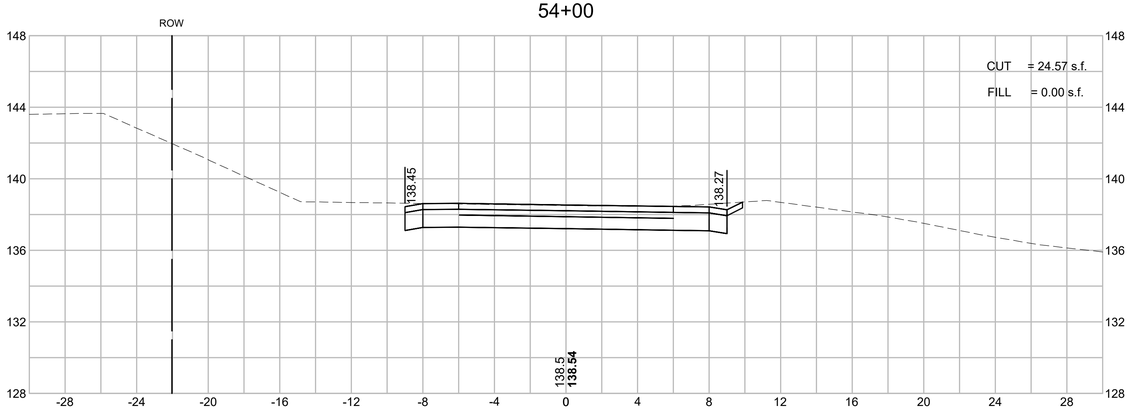

55+50

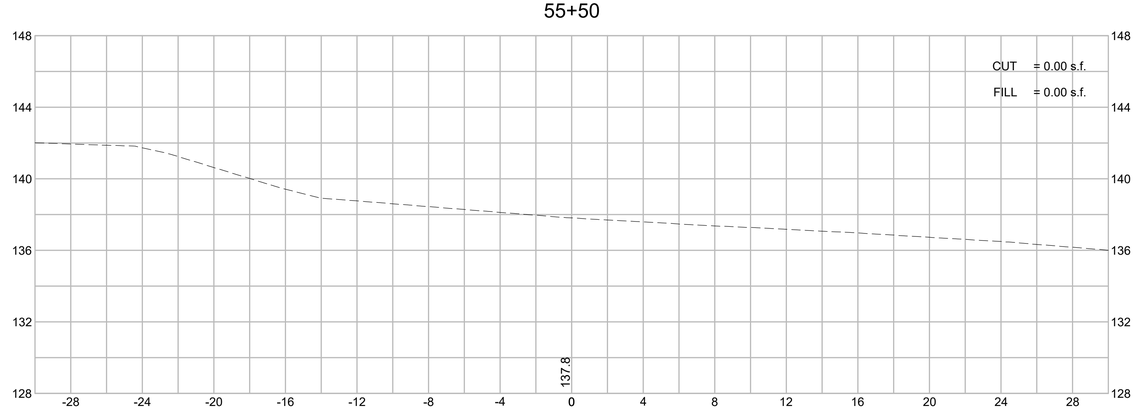

606223_HD_(XS).DWG Plotted on 22-Jun-2018 5:59 PM

HOR. SCALE IN FEET
4 0 4 8
4 0 4 8
VER. SCALE IN FEET

ACTON & CONCORD
BRUCE FREEMAN RAIL TRAIL PHASE 2B

STATE	FED. AID PROJ. NO.	SHEET NO.	TOTAL SHEETS
MA	-	138	146
PROJECT FILE NO.	606223		

CROSS SECTIONS - MEDIAN CROSSOVERS

203+00
ROUTE 2 EB ℄

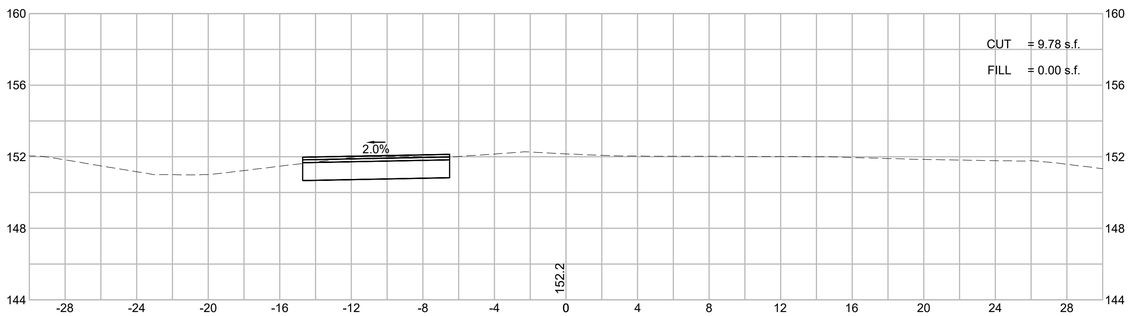

204+50
ROUTE 2 EB ℄

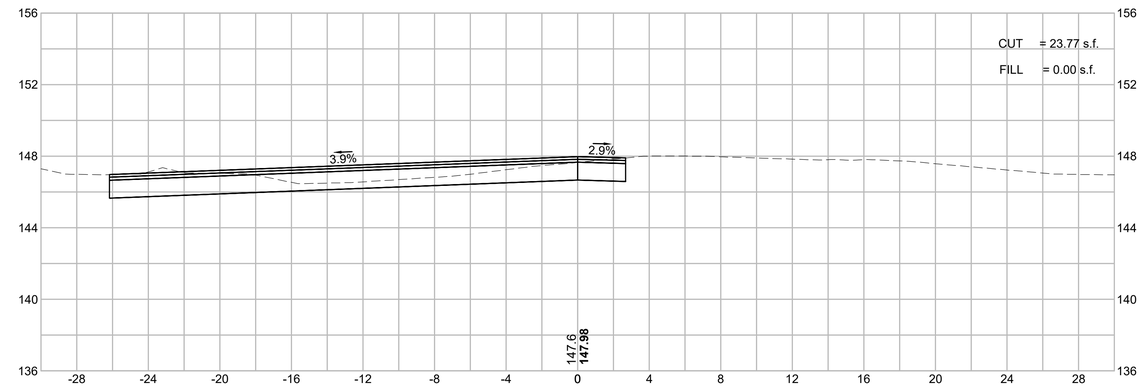

202+50
ROUTE 2 EB ℄

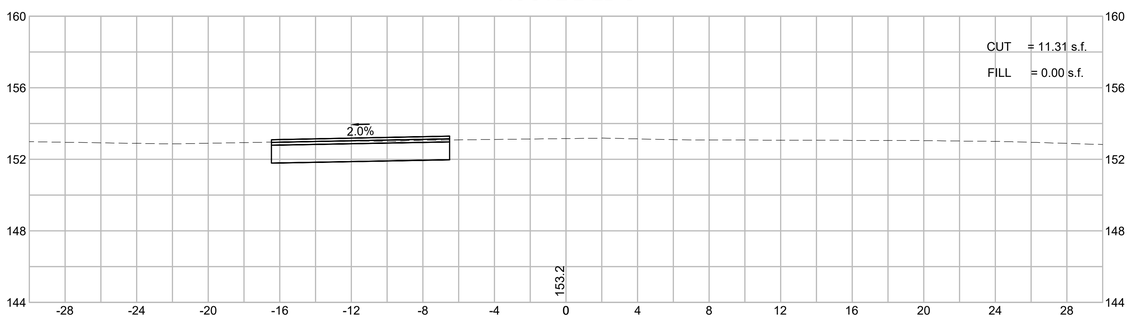

204+00
ROUTE 2 EB ℄

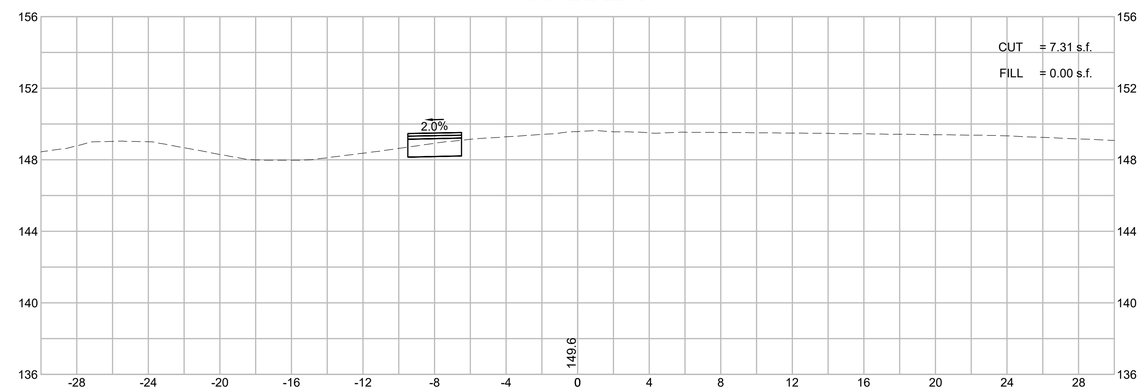

202+00
ROUTE 2 EB ℄

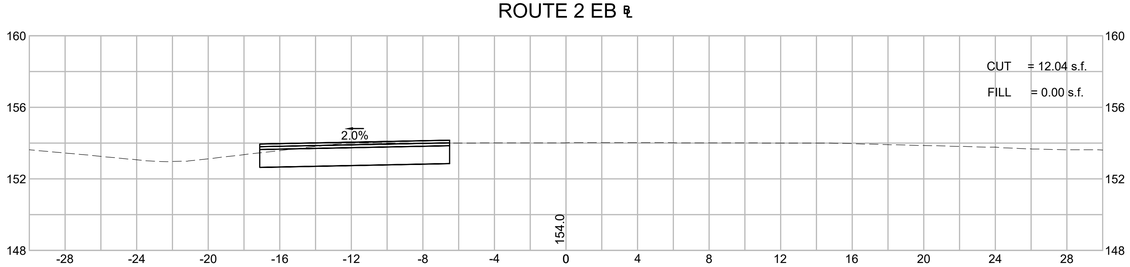

203+50
ROUTE 2 EB ℄

Plotted on 22-Jun-2018 6:00 PM
606223_HD_(XS).DWG

HOR. SCALE IN FEET

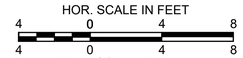

VER. SCALE IN FEET

ACTON & CONCORD
BRUCE FREEMAN RAIL TRAIL PHASE 2B

STATE	FED. AID PROJ. NO.	SHEET NO.	TOTAL SHEETS
MA	-	139	146
PROJECT FILE NO.	606223		

CROSS SECTIONS - MEDIAN CROSSOVERS

206+00
ROUTE 2 EB ℄

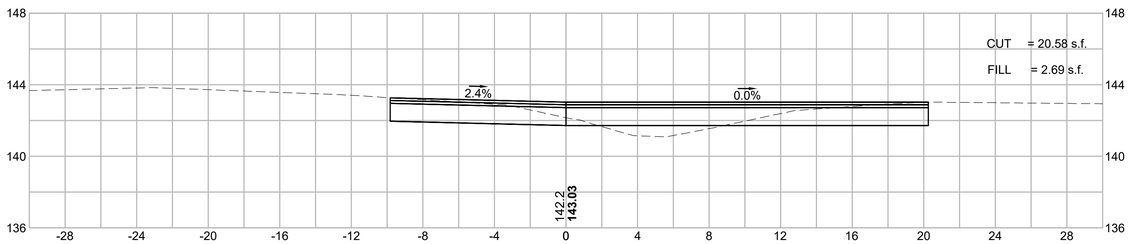

207+50
ROUTE 2 EB ℄

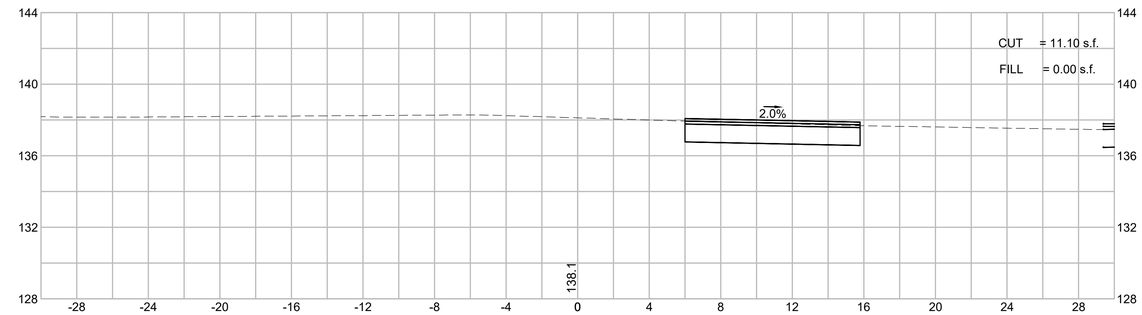

205+50
ROUTE 2 EB ℄

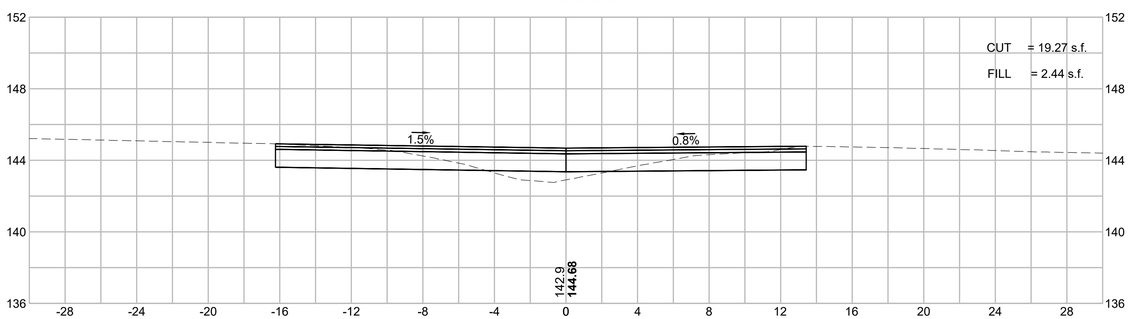

207+00
ROUTE 2 EB ℄

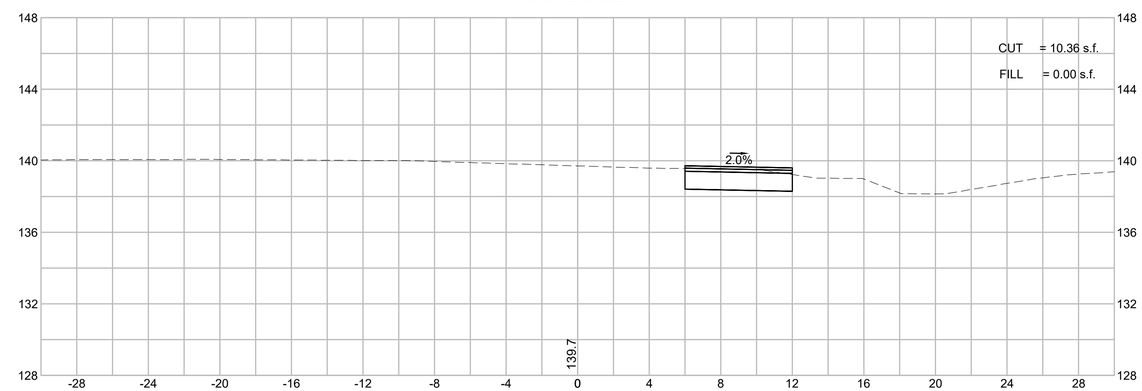

205+00
ROUTE 2 EB ℄

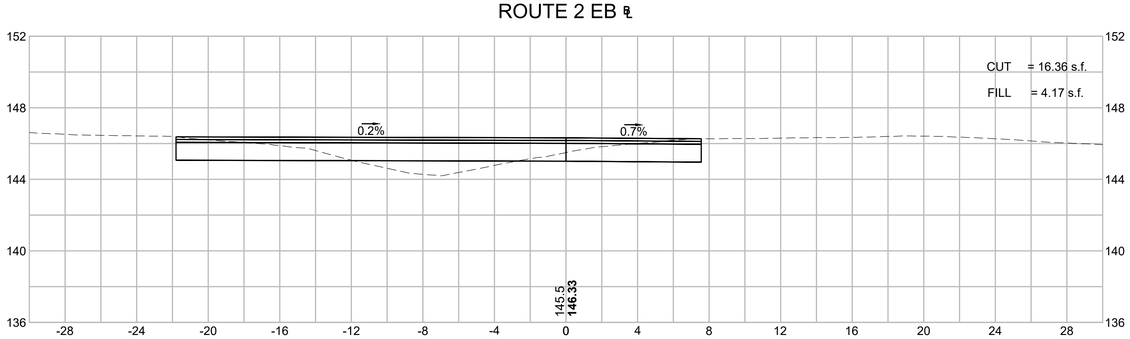

206+50
ROUTE 2 EB ℄

606223_HD_(XS).DWG Plotted on 22-Jun-2018 6:00 PM

HOR. SCALE IN FEET
4 0 4 8
4 0 4 8
VER. SCALE IN FEET

ACTON & CONCORD
BRUCE FREEMAN RAIL TRAIL PHASE 2B

STATE	FED. AID PROJ. NO.	SHEET NO.	TOTAL SHEETS
MA	-	140	146
PROJECT FILE NO.	606223		

CROSS SECTIONS - MEDIAN CROSSOVERS

606223_HD_(XS).DWG Plotted on 22-Jun-2018 6:00 PM

208+50
ROUTE 2 EB ℄

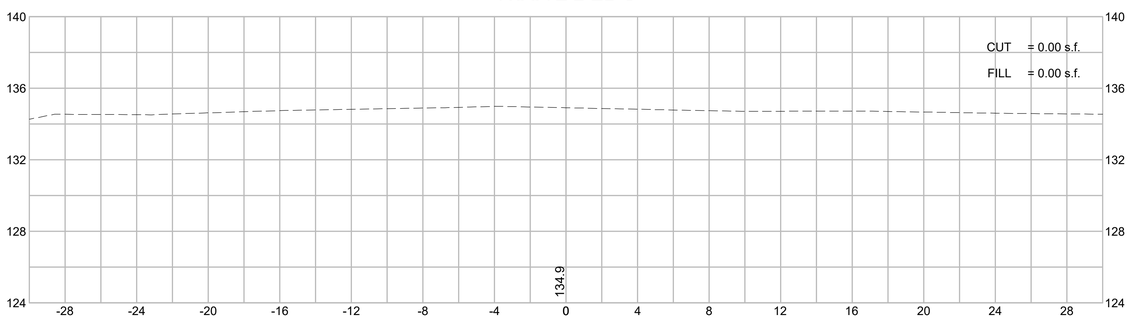

208+00
ROUTE 2 EB ℄

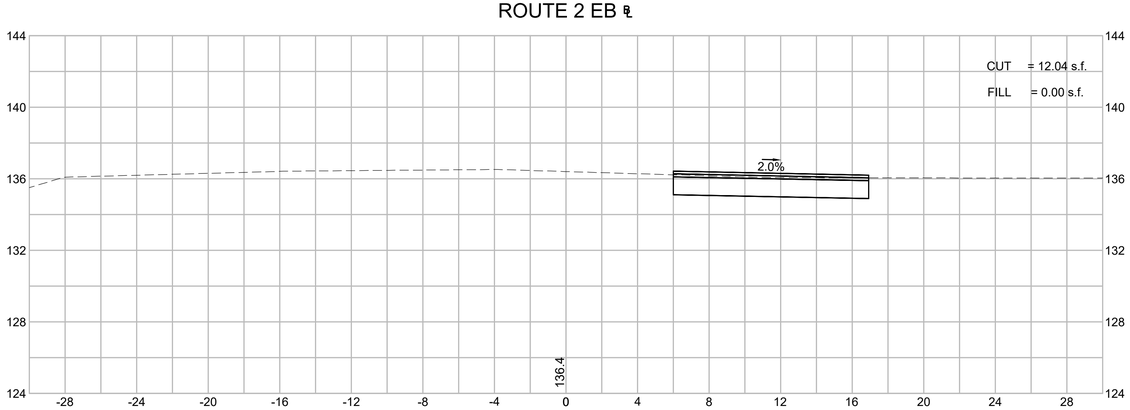

HOR. SCALE IN FEET
4 0 4 8
4 0 4 8
VER. SCALE IN FEET

ACTON & CONCORD
BRUCE FREEMAN RAIL TRAIL PHASE 2B

STATE	FED. AID PROJ. NO.	SHEET NO.	TOTAL SHEETS
MA	-	141	146
PROJECT FILE NO.	606223		

CROSS SECTIONS - MEDIAN CROSSOVERS

606223_HD_(XS).DWG Plotted on 22-Jun-2018 6:01 PM

216+50
ROUTE 2 EB ℄

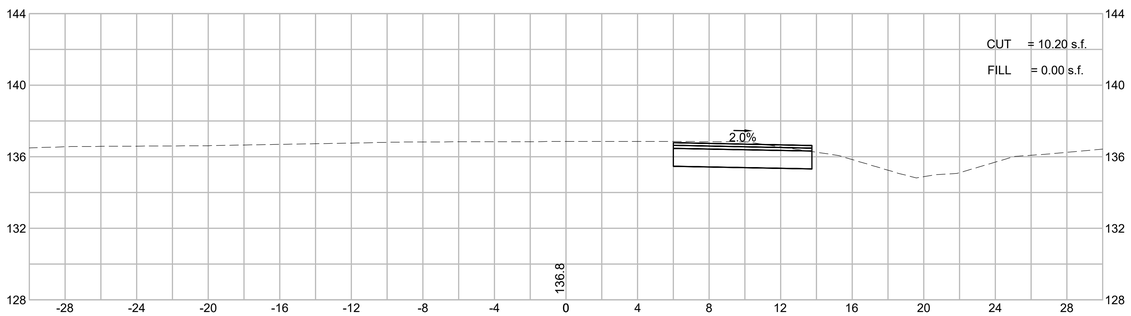

218+00
ROUTE 2 EB ℄

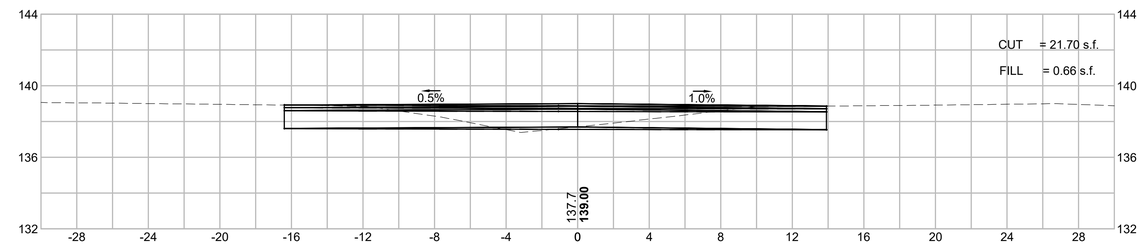

216+00
ROUTE 2 EB ℄

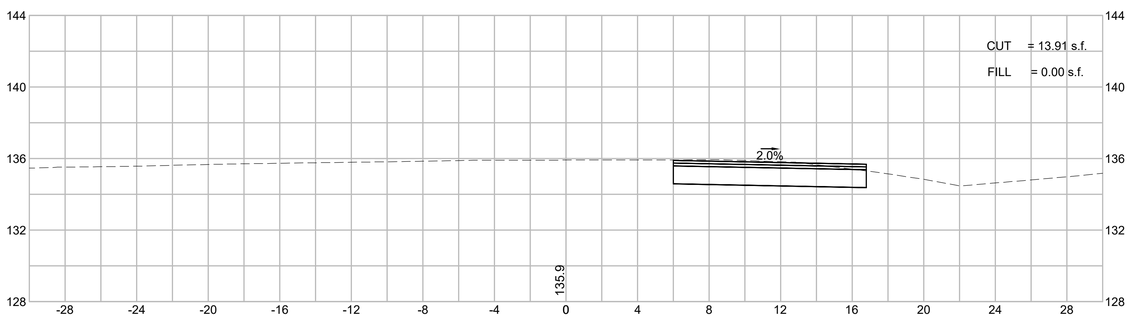

217+50
ROUTE 2 EB ℄

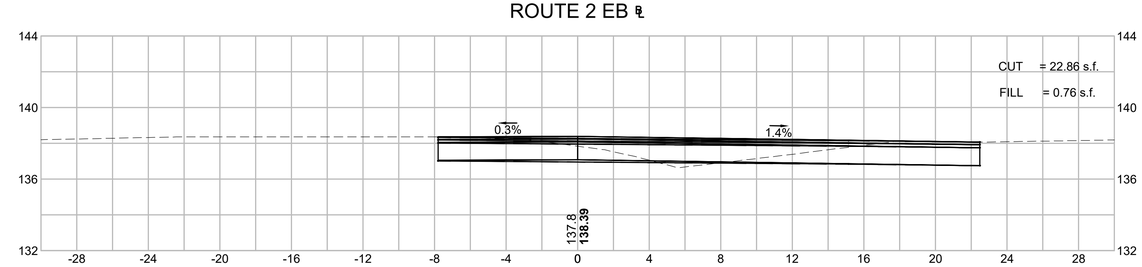

215+50
ROUTE 2 EB ℄

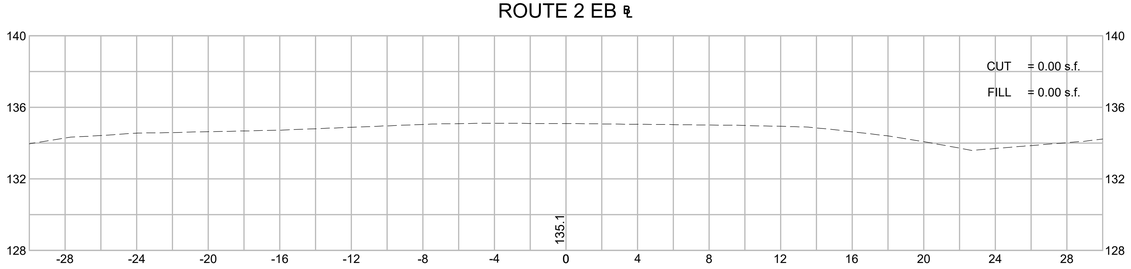

217+00
ROUTE 2 EB ℄

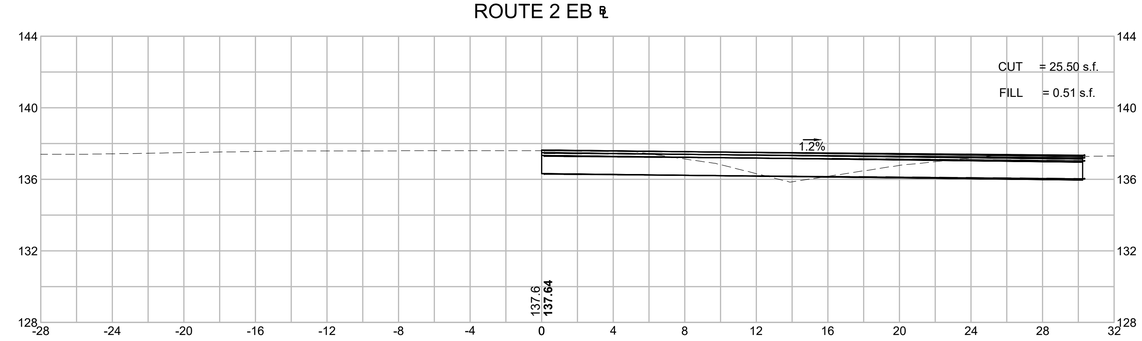

HOR. SCALE IN FEET
4 0 4 8
4 0 4 8
VER. SCALE IN FEET

ACTON & CONCORD
BRUCE FREEMAN RAIL TRAIL PHASE 2B

STATE	FED. AID PROJ. NO.	SHEET NO.	TOTAL SHEETS
MA	-	142	146
PROJECT FILE NO.	606223		

CROSS SECTIONS - MEDIAN CROSSOVERS

606223_HD_(XS).DWG Plotted on 22-Jun-2018 6:02 PM

219+50
ROUTE 2 EB ℄

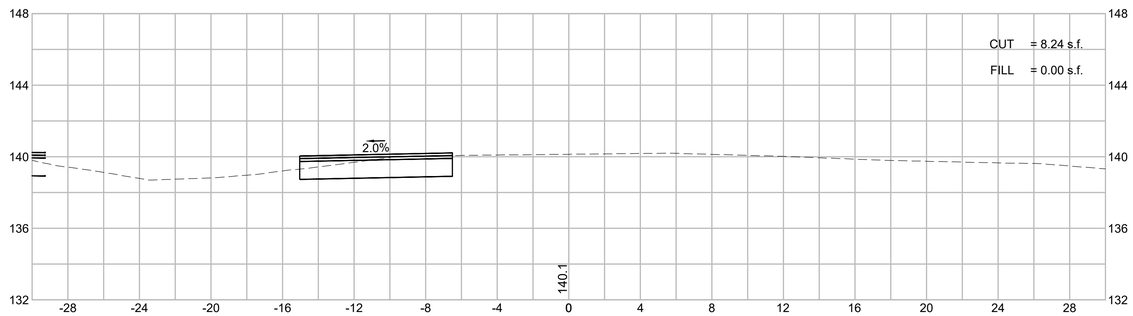

219+00
ROUTE 2 EB ℄

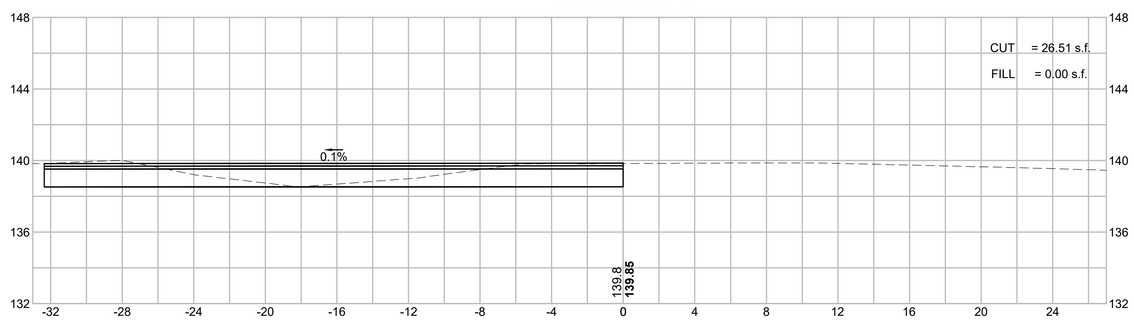

218+50
ROUTE 2 EB ℄

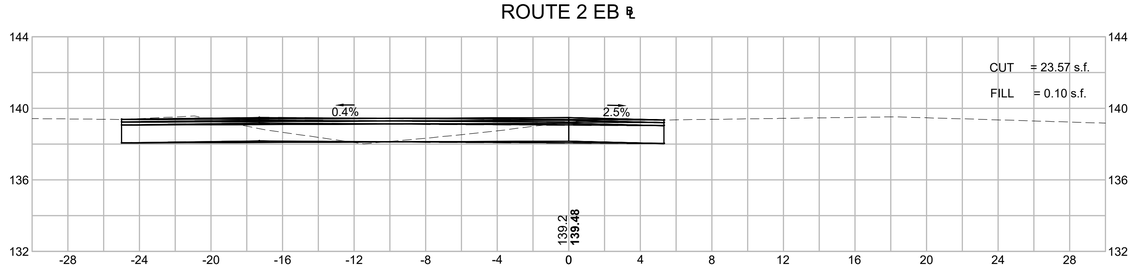

220+00
ROUTE 2 EB ℄

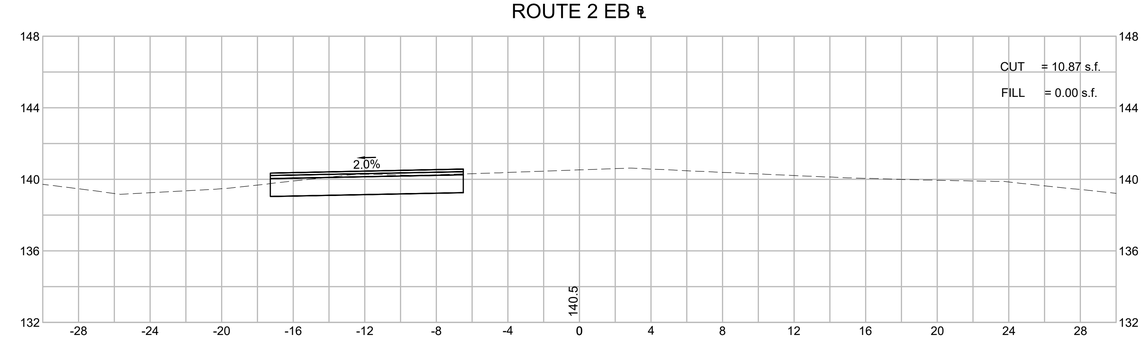

HOR. SCALE IN FEET
4 0 4 8
4 0 4 8
VER. SCALE IN FEET

ACTON & CONCORD
BRUCE FREEMAN RAIL TRAIL PHASE 2B

STATE	FED. AID PROJ. NO.	SHEET NO.	TOTAL SHEETS
MA	-	143	146
PROJECT FILE NO.	606223		

CROSS SECTIONS - MEDIAN CROSSOVERS

606223_HD_(XS).DWG Plotted on 22-Jun-2018 6:02 PM

104+00
ROUTE 2 WB ℄

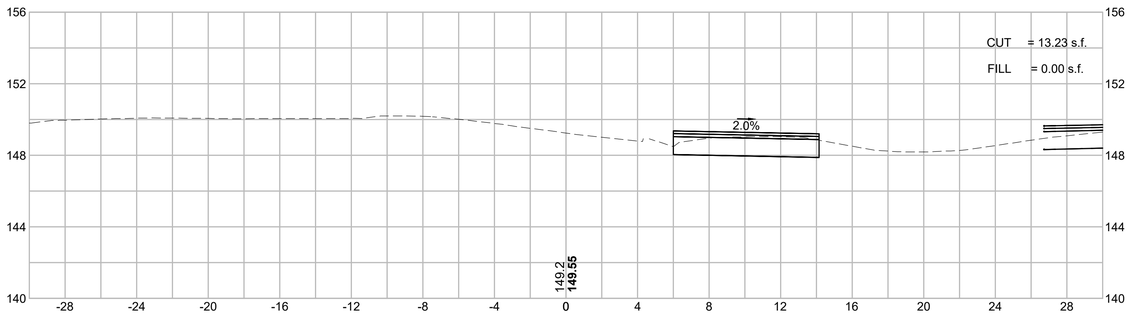

105+50
ROUTE 2 WB ℄

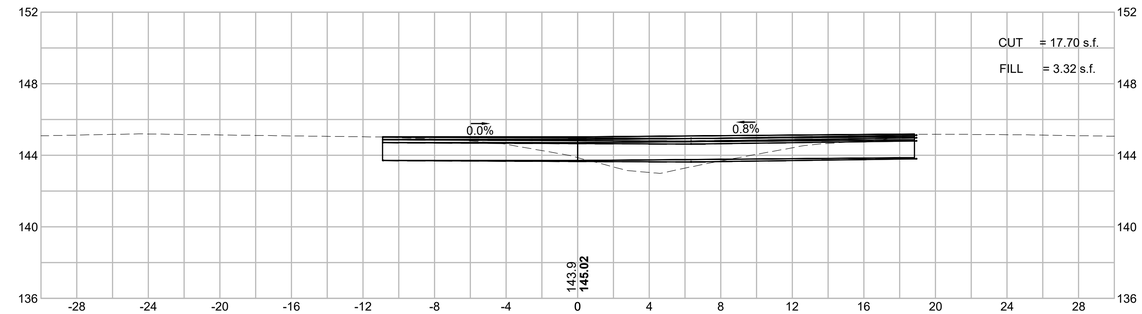

103+50
ROUTE 2 WB ℄

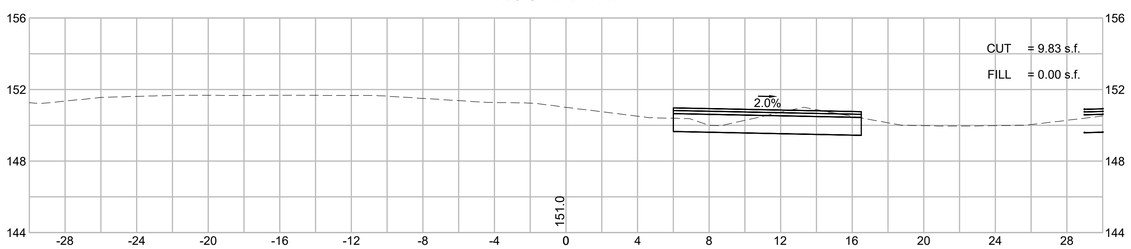

105+00
ROUTE 2 WB ℄

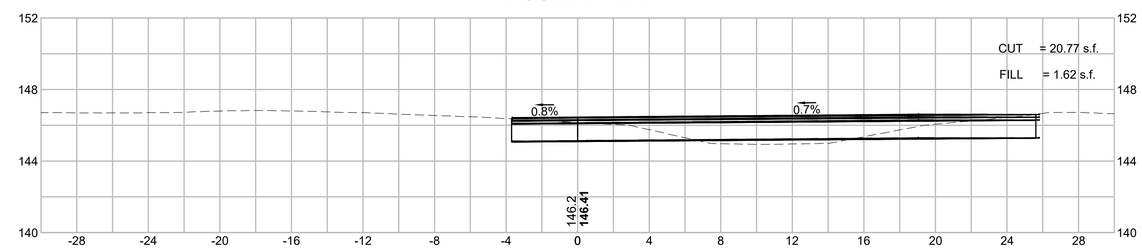

103+00
ROUTE 2 WB ℄

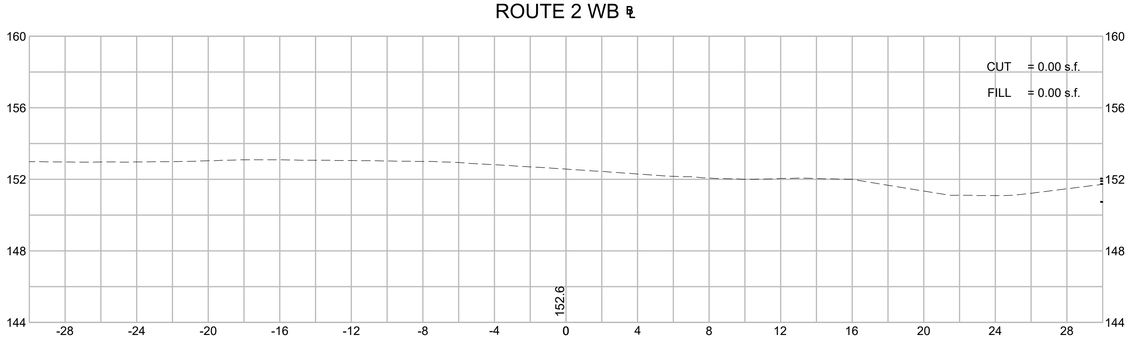

104+50
ROUTE 2 WB ℄

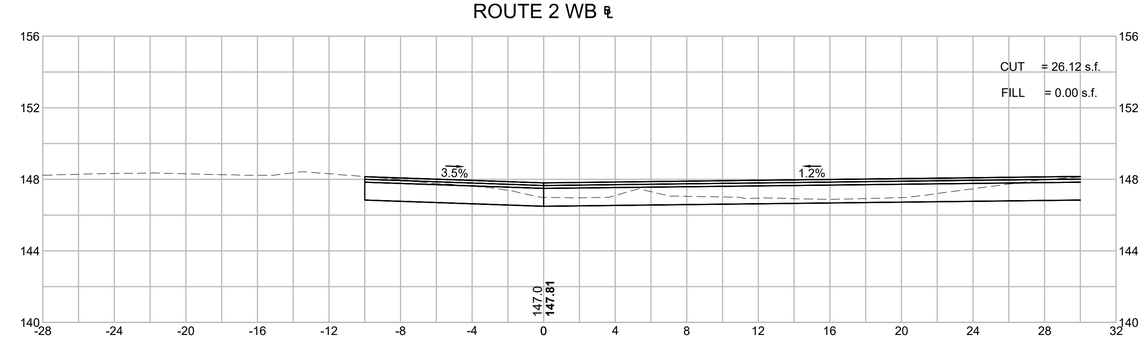

HOR. SCALE IN FEET
4 0 4 8
4 0 4 8
VER. SCALE IN FEET

ACTON & CONCORD
BRUCE FREEMAN RAIL TRAIL PHASE 2B

STATE	FED. AID PROJ. NO.	SHEET NO.	TOTAL SHEETS
MA	-	144	146
PROJECT FILE NO.	606223		

CROSS SECTIONS - MEDIAN CROSSOVERS

606223_HD_(XS).DWG Plotted on 22-Jun-2018 6:02 PM

107+00
ROUTE 2 WB ℄

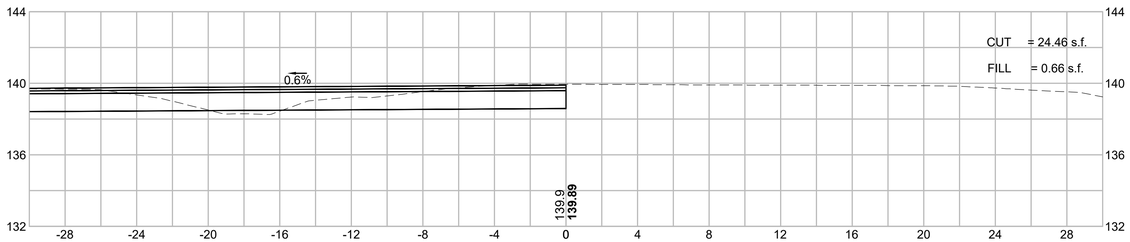

106+50
ROUTE 2 WB ℄

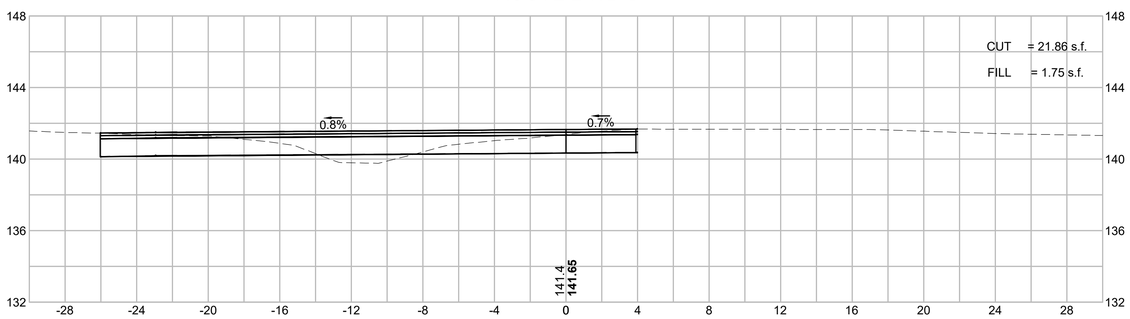

108+00
ROUTE 2 WB ℄

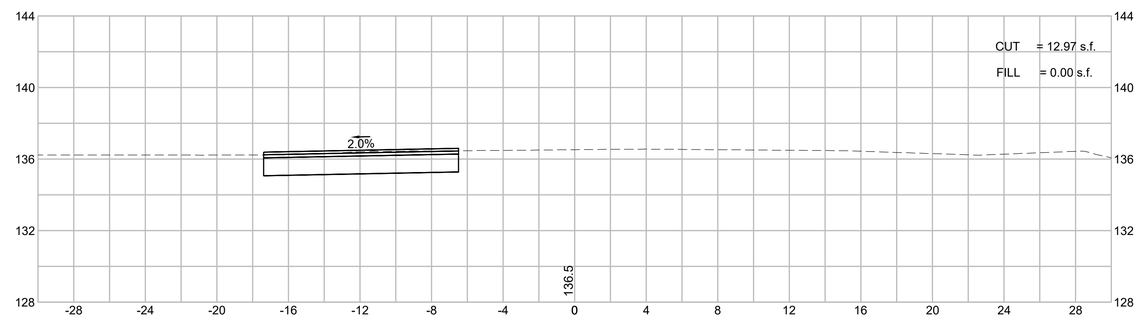

106+00
ROUTE 2 WB ℄

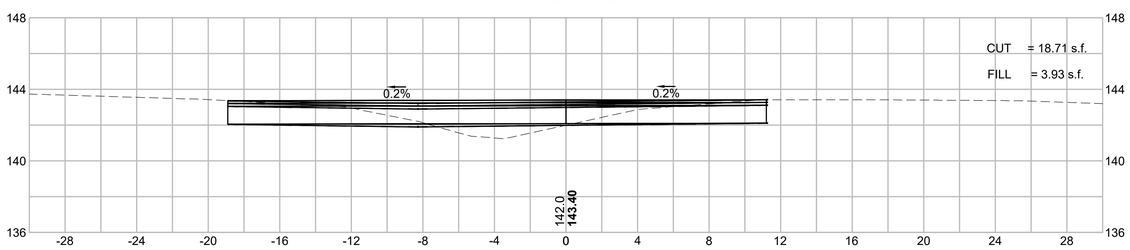

107+50
ROUTE 2 WB ℄

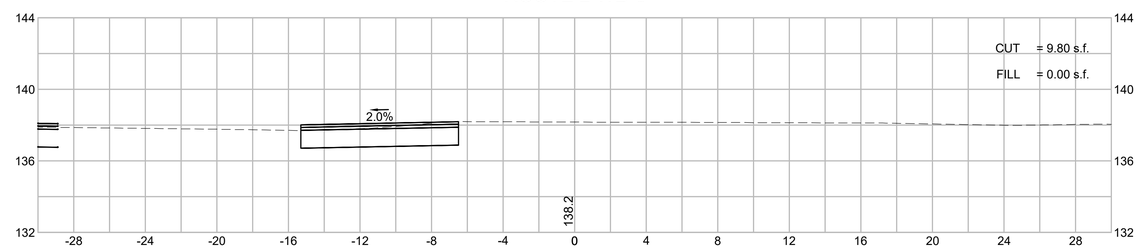

HOR. SCALE IN FEET
4 0 4 8
4 0 4 8
VER. SCALE IN FEET

ACTON & CONCORD
BRUCE FREEMAN RAIL TRAIL PHASE 2B

STATE	FED. AID PROJ. NO.	SHEET NO.	TOTAL SHEETS
MA	-	145	146
PROJECT FILE NO.	606223		

CROSS SECTIONS - MEDIAN CROSSOVERS

116+50
ROUTE 2 WB ℄

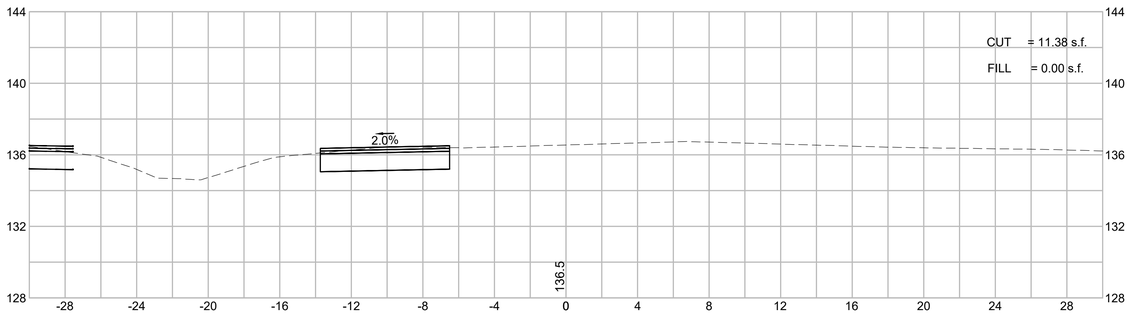

118+00
ROUTE 2 WB ℄

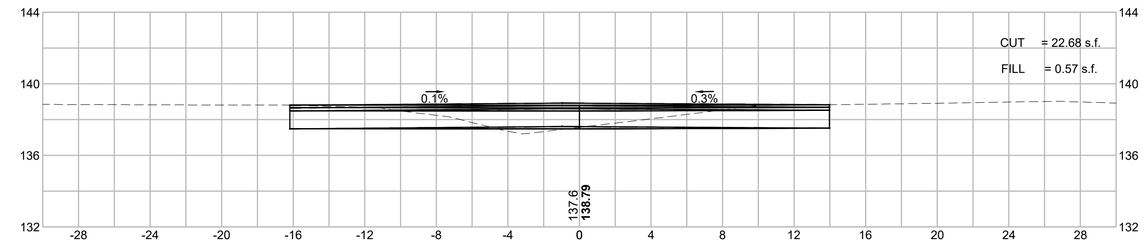

116+00
ROUTE 2 WB ℄

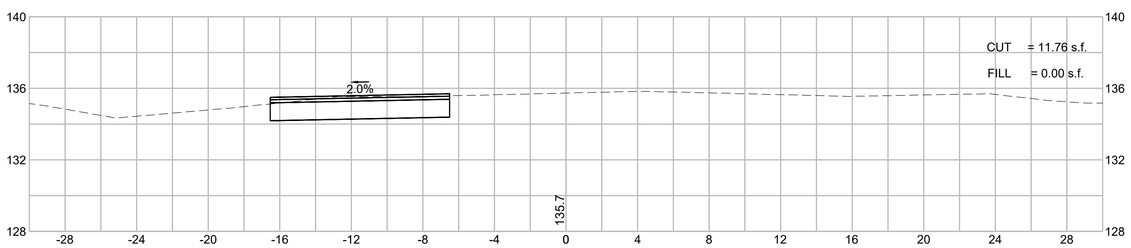

117+50
ROUTE 2 WB ℄

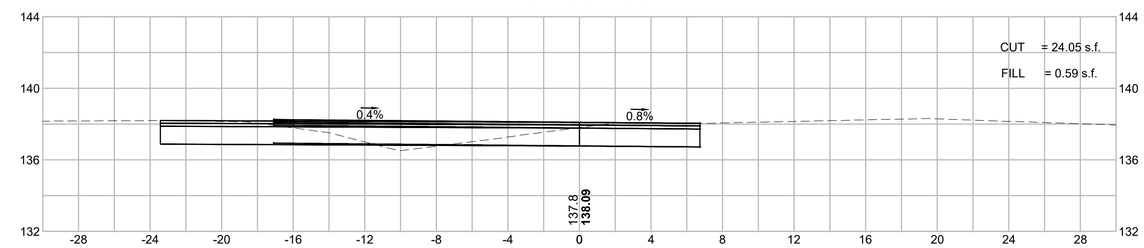

115+50
ROUTE 2 WB ℄

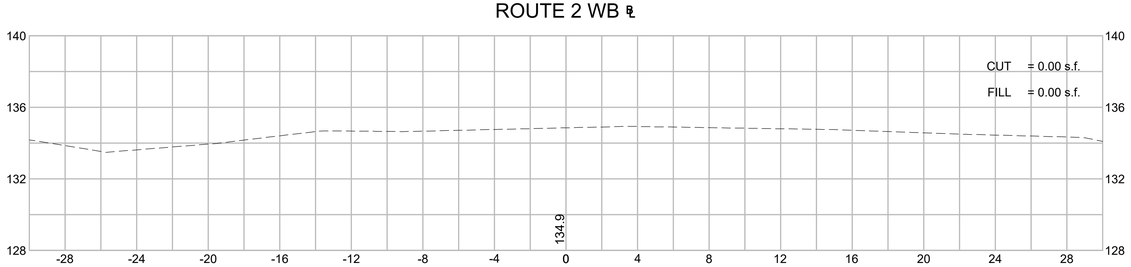

117+00
ROUTE 2 WB ℄

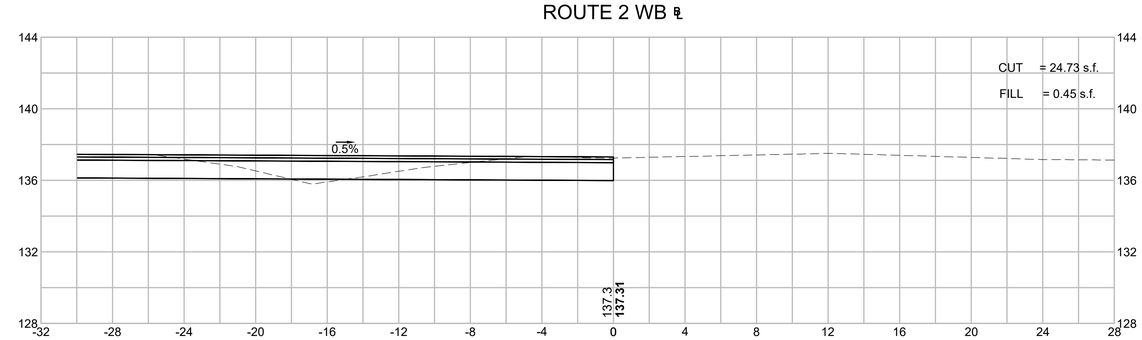

606223_HD_(XS).DWG Plotted on 22-Jun-2018 6:03 PM

HOR. SCALE IN FEET
4 0 4 8
4 0 4 8
VER. SCALE IN FEET

ACTON & CONCORD
BRUCE FREEMAN RAIL TRAIL PHASE 2B

STATE	FED. AID PROJ. NO.	SHEET NO.	TOTAL SHEETS
MA	-	146	146
PROJECT FILE NO.	606223		

CROSS SECTIONS - MEDIAN CROSSOVERS

606223_HD_(XS).DWG Plotted on 22-Jun-2018 6:03 PM

119+50
ROUTE 2 WB ℄

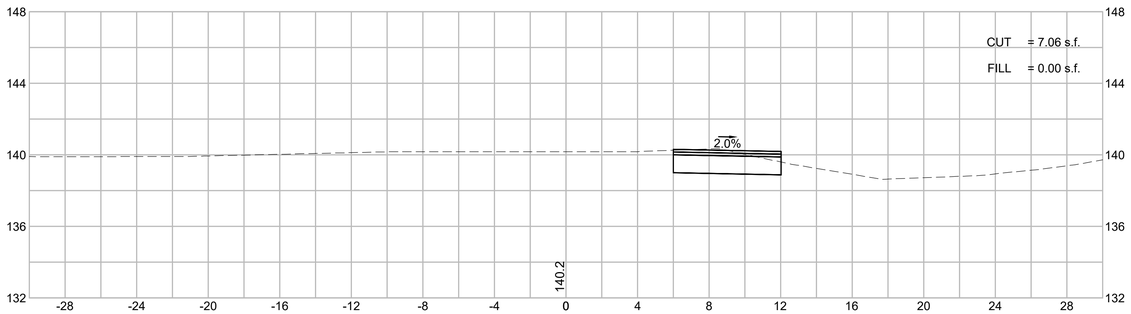

119+00
ROUTE 2 WB ℄

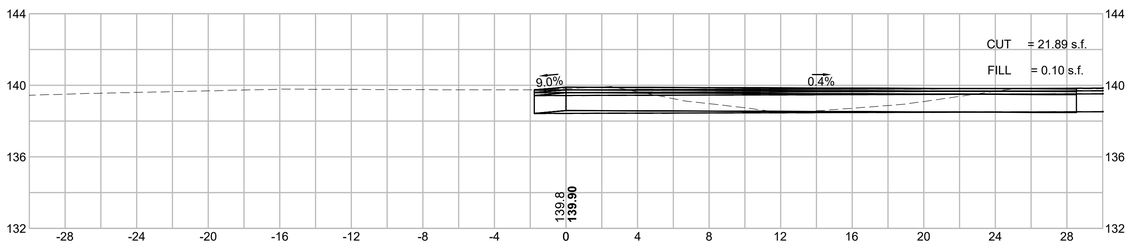

118+50
ROUTE 2 WB ℄

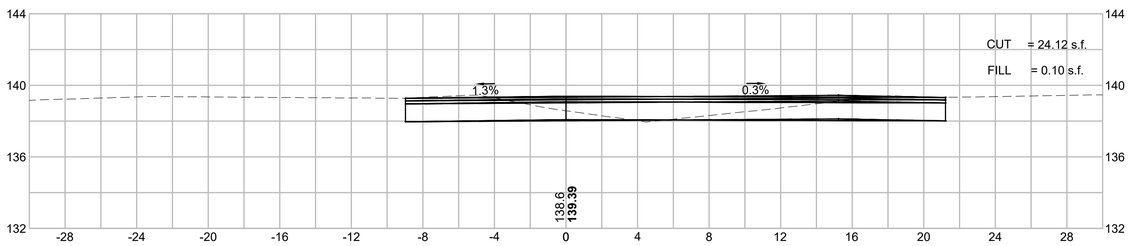
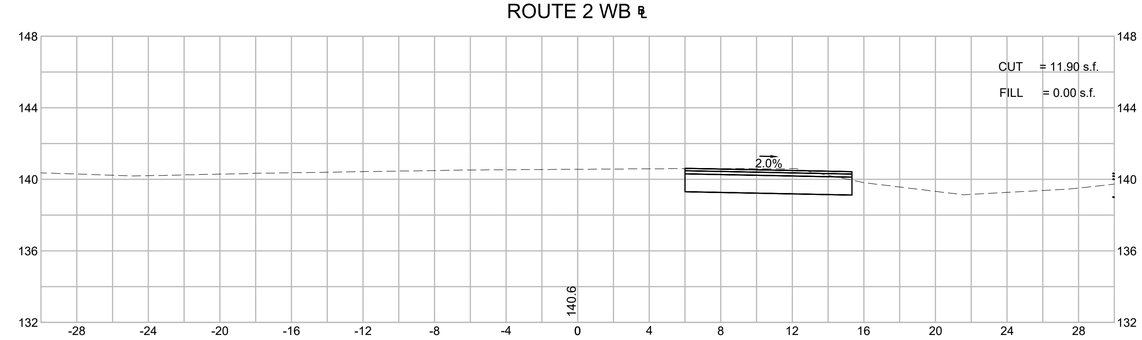
120+00
ROUTE 2 WB ℄